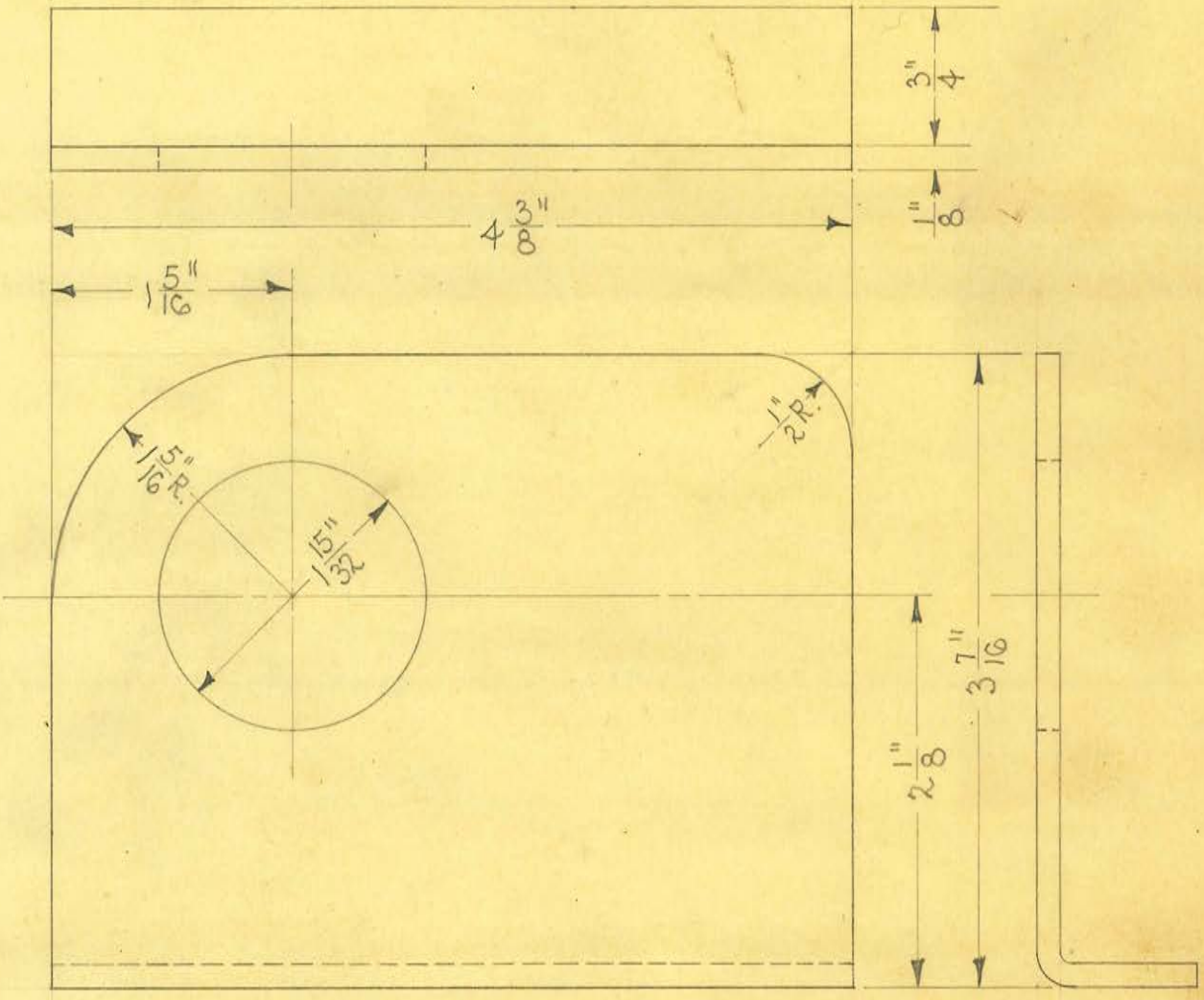


OBSOLETE

| | | | | |
|---|---|---|---|---|
| SIZE | 1/8" SHEET | ISSUE 11-13-34 | AE. | **TITLE:** PORTABLE SHOCKPROOF X-RAY CONTROL BOX RECEPTACLE MOUNTING |
| KIND | C.R. STEEL | CHANGED | | |
| SHAPE | | " | | |
| FINISH | | " | | |
| TEMP. | | " | | |
| PATT. | | " | | |

H. G. FISCHER & CO.
2335 WABANSIA AVE.
CHICAGO, ILL.

CAT. NO.

PART NO. 9269

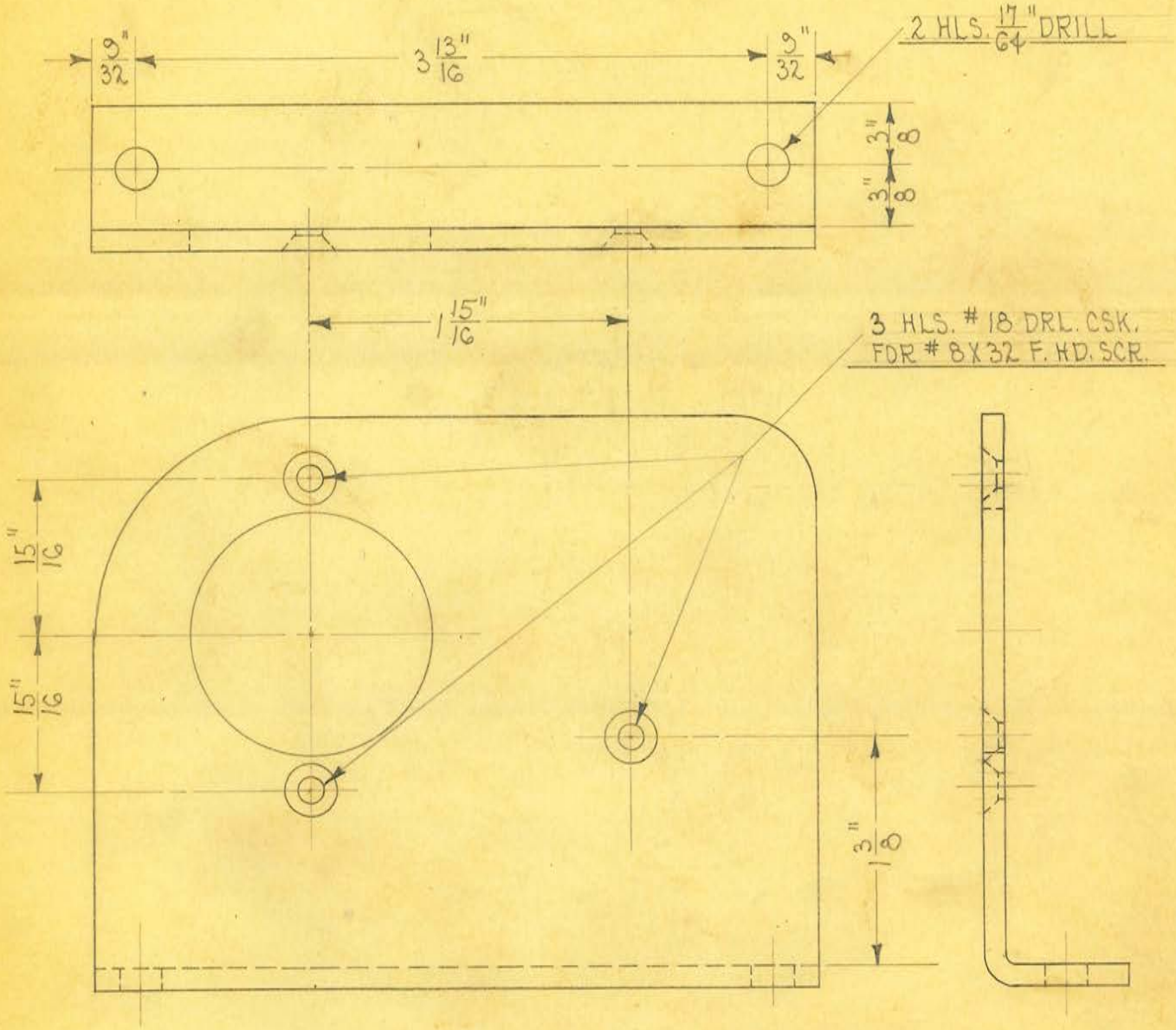


1 REQUIRED

OBSOLETE

| | | | | |
|---|---|---|---|---|
| SIZE | | ISSUE 12-4-34 | H.E. | **TITLE:** PORTABLE SHOCKPROOF X-RAY CONTROL BOX RECEPTACLE MOUNTING (DRILLED) |
| KIND | | CHANGED | | |
| SHAPE | | " | | |
| FINISH | BLACK #80 | " | | |
| TEMP. | | " | | |
| PATT. | | " | | |

H. G. FISCHER & CO.
2335 WABANSIA AVE.
CHICAGO, ILL

CAT. NO.

PART NO. 9269F

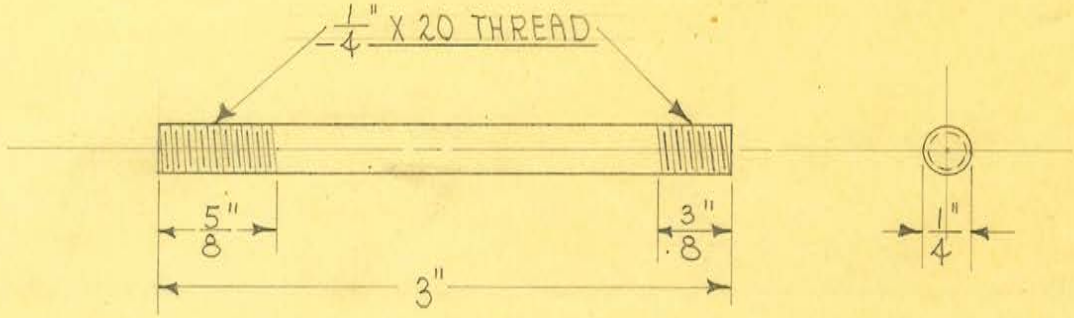


2 REQUIRED

OBSOLETE

| | | | | | |
|---|---|---|---|---|---|
| SIZE | 1/4" | ISSUE 11-14-34 | A.E. | **TITLE:** PORTABLE SHOCKPROOF X-RAY AUTO CONTROL CLAMP STUD - LONG | |
| KIND | C.R. STEEL | CHANGED | | | |
| SHAPE | | " | | | |
| FINISH | | " | | | |
| TEMP. | | " | | | |
| PATT. | | " | | | |

H. G. FISCHER & CO.
2335 WABANSIA AVE.
CHICAGO, ILL

CAT. NO.

PART NO. 9273

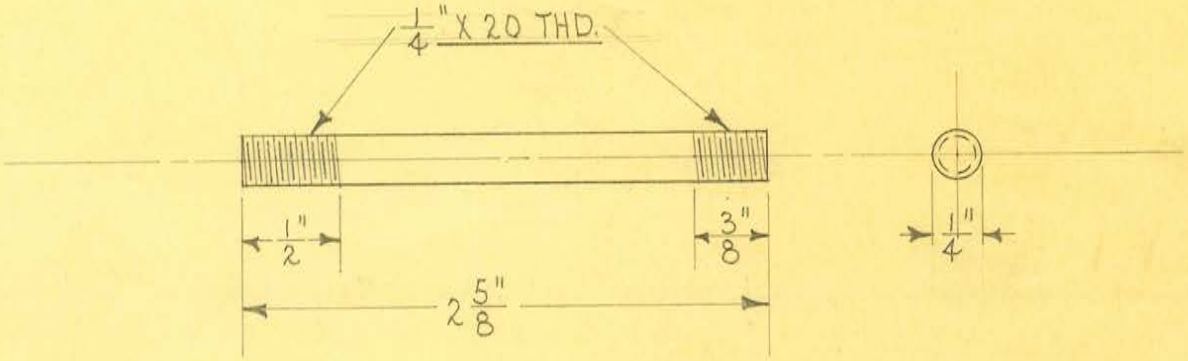


2 REQUIRED

OBSOLETE

| | | | | | |
|---|---|---|---|---|---|
| SIZE | 1/4" | ISSUE 11-14-34 | | TITLE: PORTABLE SHOCKPROOF X-RAY AUTO CONTROL CLAMP STUD - SHORT | |
| KIND | C.R. STEEL | CHANGED | | | |
| SHAPE | | " | | | |
| FINISH | | " | | | |
| TEMP. | | " | | | |
| PATT. | | " | | | |

| | | |
|---|---|---|
| H. G. FISCHER & CO. 2335 WABANSIA AVE. CHICAGO, ILL | CAT. NO. | PART NO. 9274 |

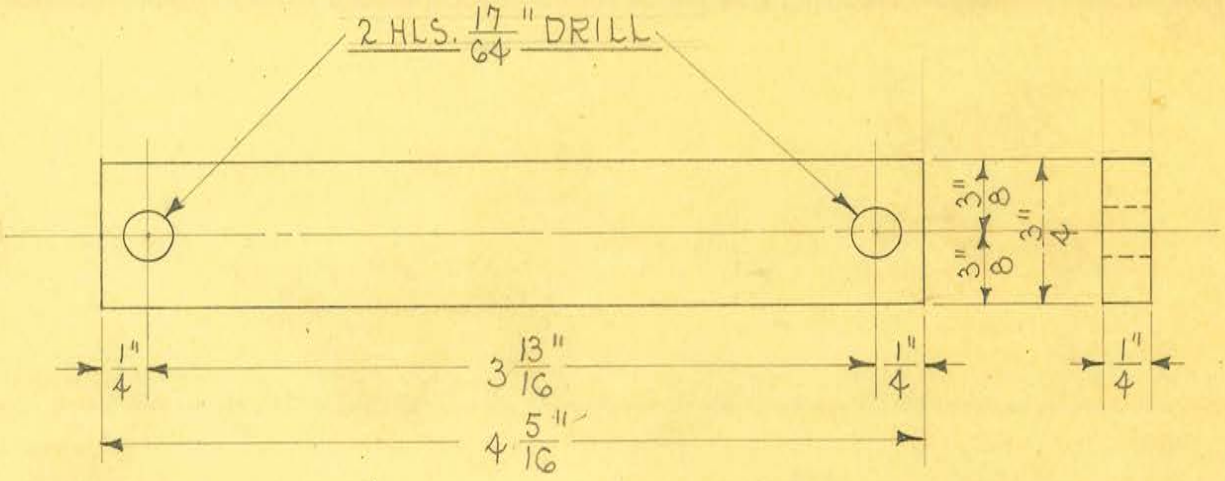


1 REQUIRED

OBSOLETE

| | | | | |
|---|---|---|---|---|
| SIZE | 3/4" X 1/4" | ISSUE 11-14-34 | 2/8. | TITLE: PORTABLE SHOCKPROOF X-RAY AUTO CONTROL CLAMP STRIP |
| KIND | C.R. STEEL | CHANGED | | |
| SHAPE | | " | | |
| FINISH | | " | | |
| TEMP. | | " | | |
| PATT. | | " | | |

H. G. FISCHER & CO.
2335 WABANSIA AVE.
CHICAGO, ILL.

CAT. NO.

PART NO. 9275

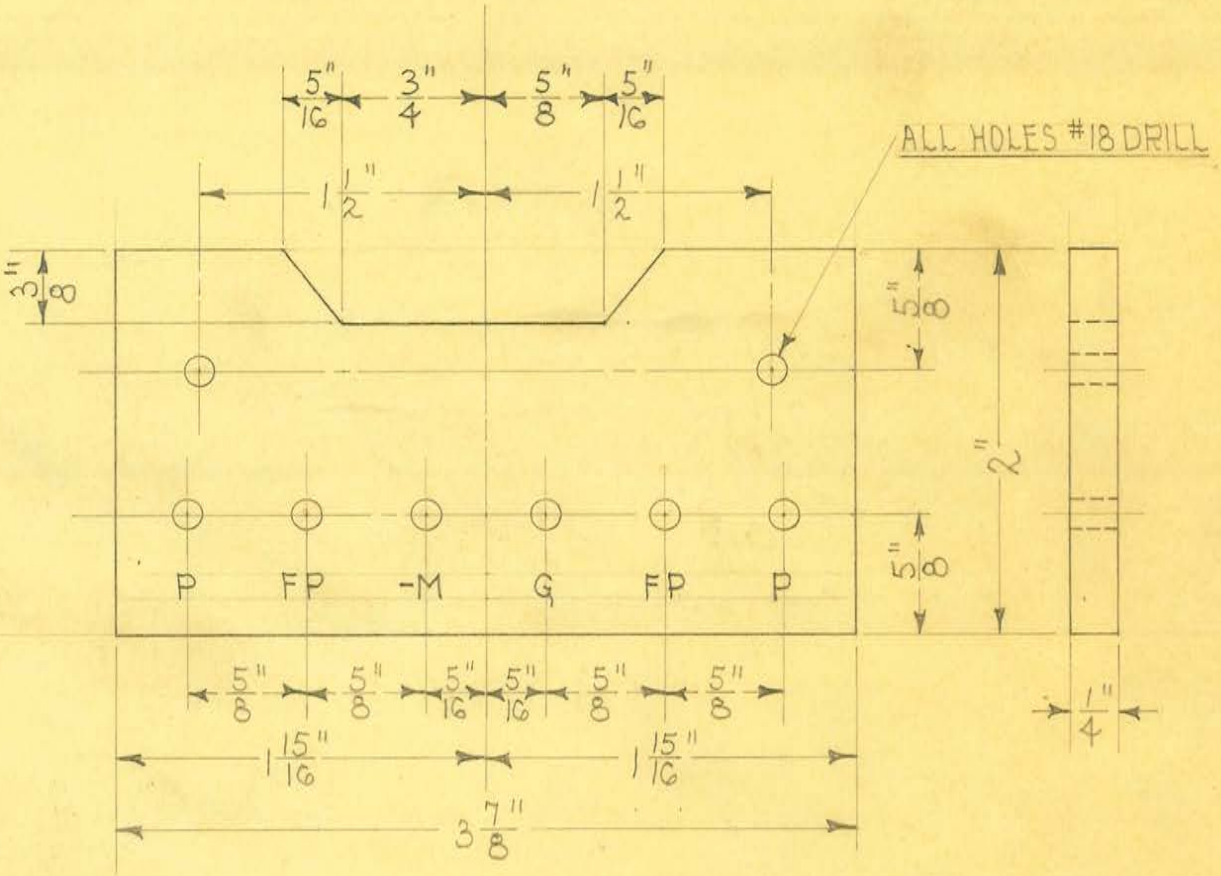


1 REQUIRED

OBSOLETE

| | | | | | |
|---|---|---|---|---|---|
| SIZE | 1/4" RICHELAIN | ISSUE 11-15-34 | A.E. | **TITLE:** PORTABLE SHOCKPROOF X-RAY CONTROL BOX TERM. BOARD - ENGRAVED | |
| KIND | BAKELITE | CHANGED 12-26-35 | A.E. | | |
| SHAPE | | " | | | |
| FINISH | | " | | | |
| TEMP. | | " | | H. G. FISCHER & CO. 2335 WABANSIA AVE. CHICAGO, ILL | CAT. NO. |
| PATT. | | " | | | PART NO. 927CA |

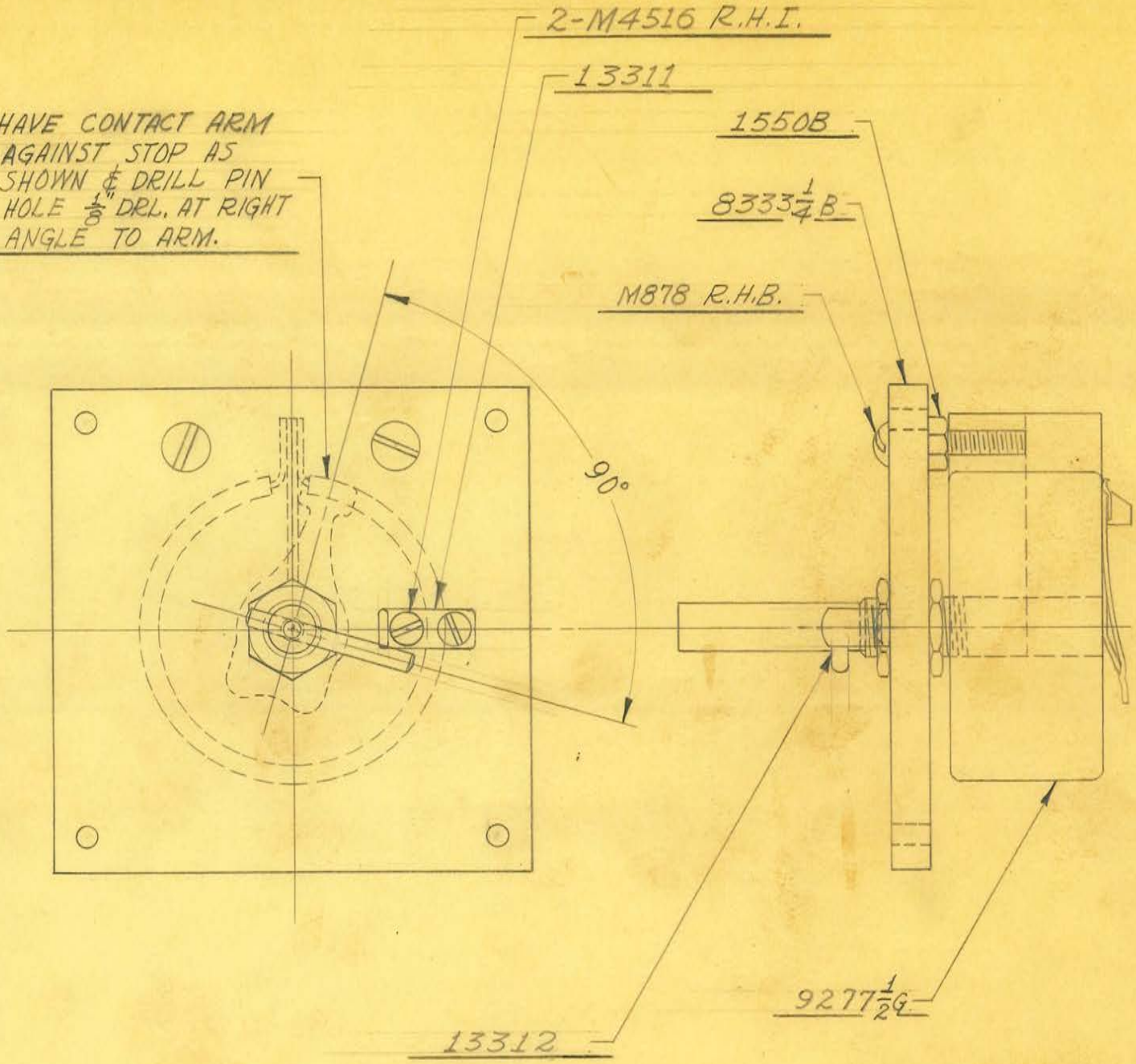


OBSOLETE

1 REQUIRED

| | | | | |
|---|---|---|---|---|
| SIZE | | ISSUE 3-14-39 | J.W. | **TITLE:** FISCHER "DSP-20" CONTROL BOX RHEOSTAT (MOUNTED) |
| KIND | | CHANGED 7-10-40 | J.W. | |
| SHAPE | | " | | |
| FINISH | | " | | |
| TEMP. | | " | | |
| PATT. | | " | | |

H. G. FISCHER & CO.
2335 WABANSIA AVE.
CHICAGO, ILL.

CAT. NO.

PART NO. 9277GA

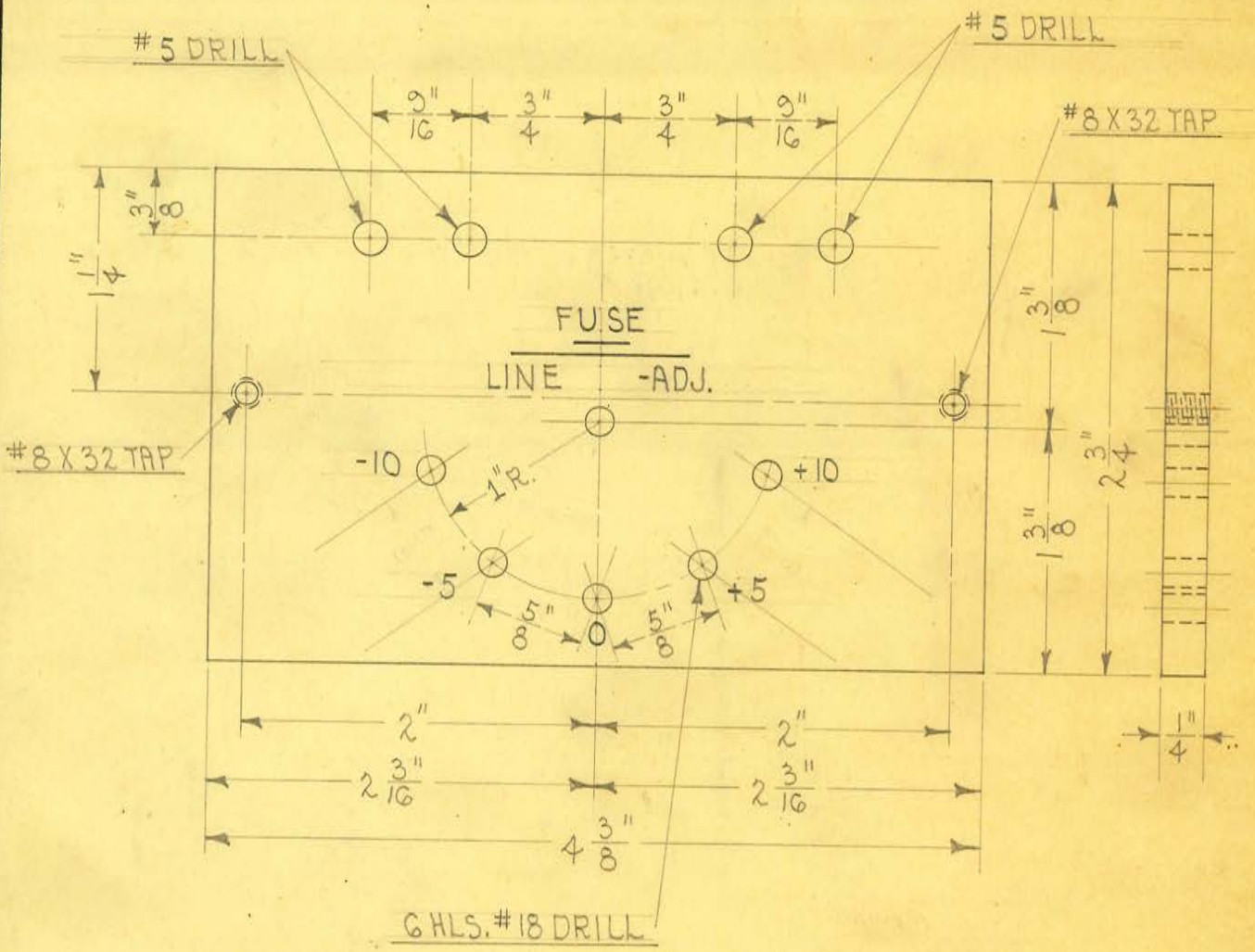


1 REQUIRED

OBSOLETE

| | | | | |
|---|---|---|---|---|
| SIZE | 1/4" RICHELAIN | ISSUE 1-15-35 | J.E. | TITLE: PORTABLE SHOCKPROOF X-RAY FUSE & CURRENT SELECTOR BOARD - ENGRAVED |
| KIND | BAKELITE | CHANGED | | |
| SHAPE | | " | | |
| FINISH | | " | | |
| TEMP. | | " | | |
| PATT. | | " | | |

H. G. FISCHER & CO.
2335 WABANSIA AVE.
CHICAGO, ILL

CAT. NO.

PART NO. 9285

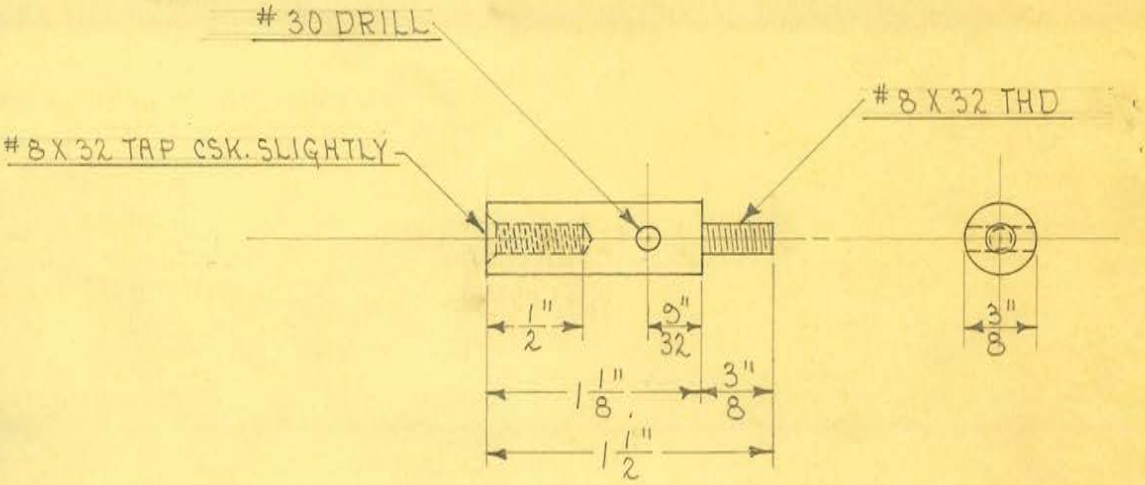


2 REQUIRED

OBSOLETE

| | | | | |
|---|---|---|---|---|
| SIZE | 3/8" DIA. | ISSUE 1-15-34 | J.E. | **TITLE:** PORTABLE SHOCKPROOF X-RAY FUSE & CURRENT SEL. BOARD MOUNTING POST |
| KIND | BRASS ROD | CHANGED | | |
| SHAPE | | " | | |
| FINISH | CAD. #23 | " | | |
| TEMP. | | " | | H. G. FISCHER & CO. 2335 WABANSIA AVE. CHICAGO, ILL. — CAT. NO. — PART NO. 9285 1/2 |
| PATT. | | " | | |

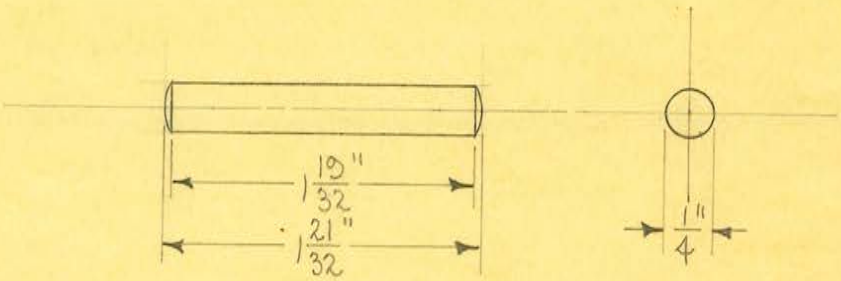


1 REQUIRED

OBSOLETE

| | | | | |
|---|---|---|---|---|
| SIZE | 1/4" | ISSUE 11-26-34 | A.E. | **TITLE:** PORTABLE SHOCKPROOF X-RAY UPRIGHT TUBE SLIDE LOCK HANDLE SHAFT |
| KIND | C.R. STEEL | CHANGED | | |
| SHAPE | | " | | |
| FINISH | CAD. #23 | " | | |
| TEMP. | | " | | |
| PATT. | | " | | |

H. G. FISCHER & CO.
2335 WABANSIA AVE.
CHICAGO, ILL

CAT. NO.

PART NO. 9288

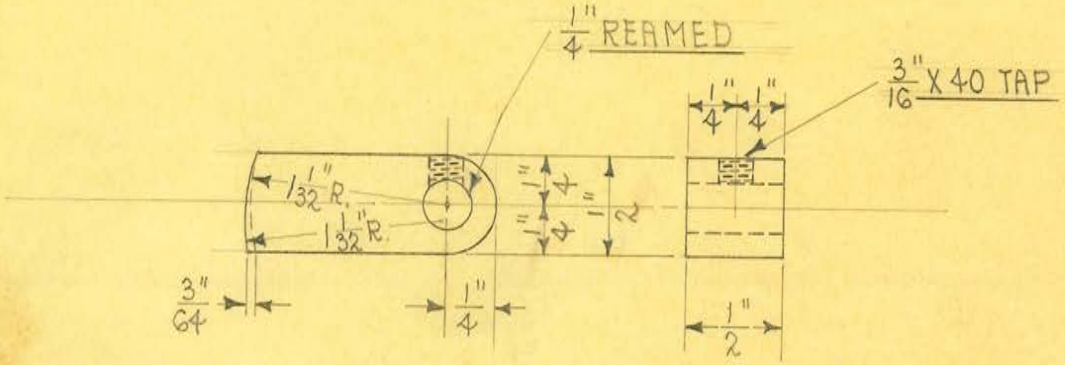


1 REQUIRED

OBSOLETE

| | | | | | |
|---|---|---|---|---|---|
| SIZE | | ISSUE 11-30-34 | A.E. | TITLE: PORTABLE SHOCKPROOF X-RAY UPRIGHT SLIDE LOCK PIECE | |
| KIND | IRON CASTING | CHANGED | | | |
| SHAPE | | " | | | |
| FINISH | | " | | | |
| TEMP. | | " | | | |
| PATT. | 6316-797 | " | | H. G. FISCHER & CO. 2335 WABANSIA AVE. CHICAGO, ILL | CAT. NO. |
| | | | | | PART NO. 9289F |

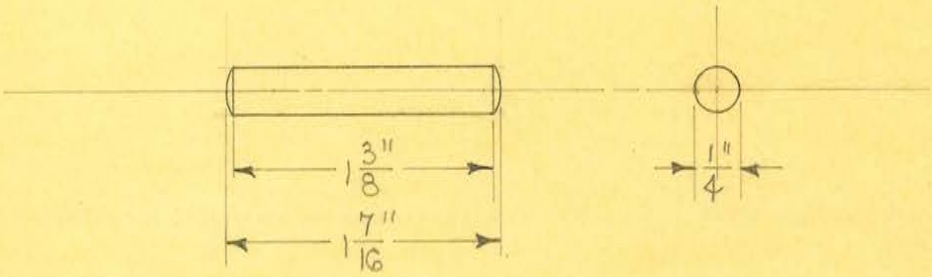


1 REQUIRED

OBSOLETE

| | | | | |
|---|---|---|---|---|
| SIZE | 1/4" | ISSUE 11-26-34 | J.E.G. | TITLE: PORTABLE SHOCKPROOF X-RAY UPRIGHT TUBE SLIDE LOCK PIECE SHAFT |
| KIND | C.R. STEEL | CHANGED | | |
| SHAPE | | " | | |
| FINISH | CAD. #23 | " | | |
| TEMP. | | " | | H. G. FISCHER & CO. 2335 WABANSIA AVE. CHICAGO, ILL — CAT. NO. — PART NO. 9290 |
| PATT. | | " | | |

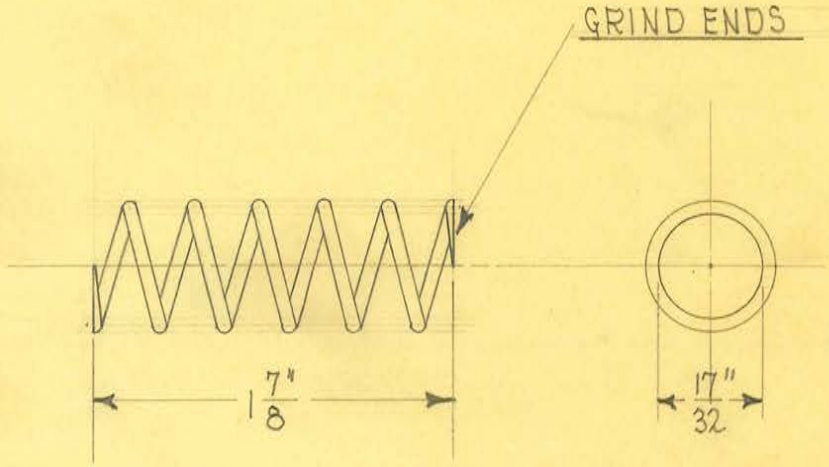


6 TURNS WOUND ON 7/16" ARBOR

1 REQUIRED

OBSOLETE

| | | | | | |
|---|---|---|---|---|---|
| SIZE | .080" | ISSUE 3-9-35 | A.E. | **TITLE:** PORTABLE SHOCKPROOF X-RAY UPRIGHT TUBE SLIDE LOCK SPRING | |
| KIND | MUSIC WIRE | CHANGED | | | |
| SHAPE | | " | | | |
| FINISH | BLACK #80 | " | | | |
| TEMP. | | " | | | |
| PATT. | | " | | | |

H. G. FISCHER & CO.
2335 WABANSIA AVE.
CHICAGO, ILL

CAT. NO.

PART NO. 9291

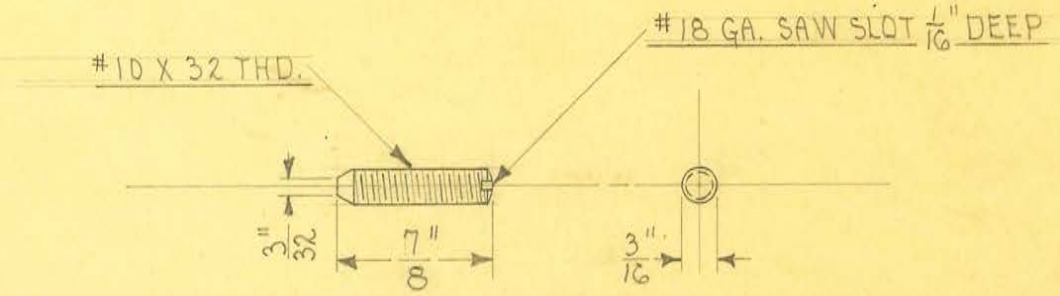


2 REQUIRED

OBSOLETE

| | | | | | |
|---|---|---|---|---|---|
| SIZE | 3/16" | ISSUE 11-20-34 | A.E. | **TITLE:** PORTABLE SHOCKPROOF X-RAY UPRIGHT TUBE SLIDE SET SCREW | |
| KIND | SCREW STOCK | CHANGED | | | |
| SHAPE | | " | | | |
| FINISH | CAD. #23 | " | | | |
| TEMP. | | " | | | |
| PATT. | | " | | | |
| | | | | H. G. FISCHER & CO. 2335 WABANSIA AVE. CHICAGO, ILL | CAT. NO. |
| | | | | | PART NO. 9292 |

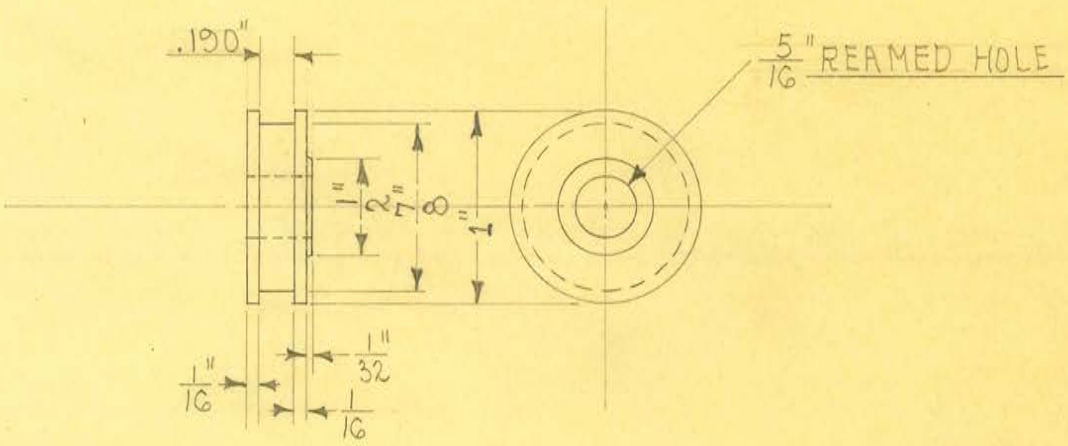


4 REQUIRED

OBSOLETE

| | | | | | |
|---|---|---|---|---|---|
| SIZE | 1" | ISSUE 11-20-34 | A.E. | TITLE: PORTABLE SHOCKPROOF X-RAY HORIZONTAL SLIDE ROLLER | |
| KIND | C.R. STEEL | CHANGED | | | |
| SHAPE | | " | | | |
| FINISH | CAD. #23 | " | | | |
| TEMP. | | " | | | |
| PATT. | | " | | | |

| | | |
|---|---|---|
| H. G. FISCHER & Co. 2335 WABANSIA AVE. CHICAGO, ILL | CAT. NO. | PART NO. 9294 |

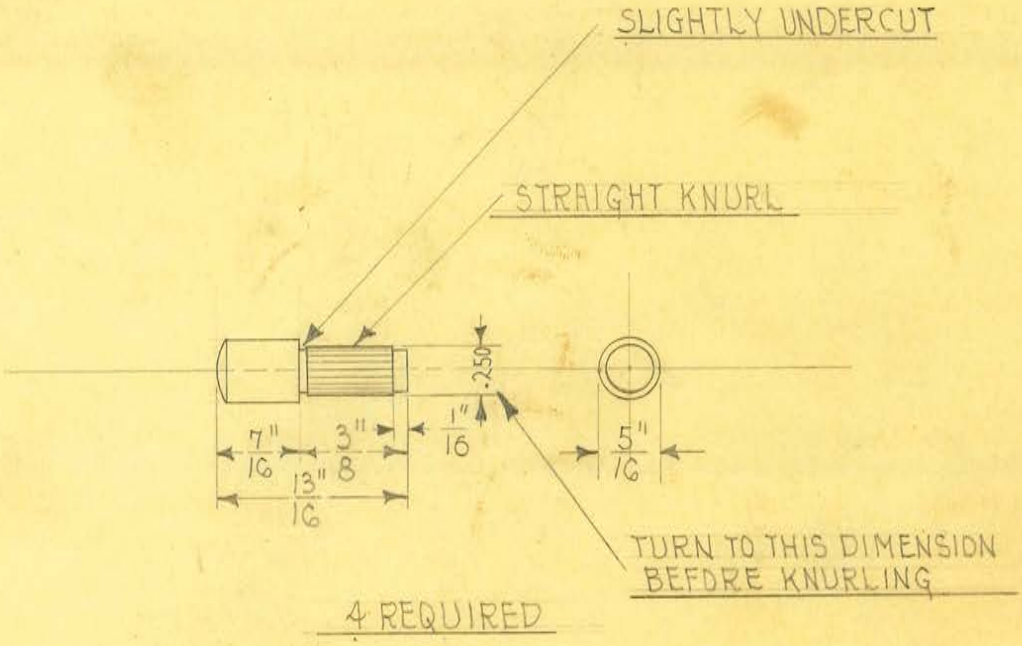


OBSOLETE

| | | | | | |
|---|---|---|---|---|---|
| SIZE | 5/16" | ISSUE 11-19-34 | J.E. | **TITLE:** PORTABLE SHOCKPROOF X-RAY HORIZONTAL SLIDE ROLLER SHAFT | |
| KIND | C.R. STEEL | CHANGED | | | |
| SHAPE | | " | | | |
| FINISH | CAD. #23 | " | | | |
| TEMP. | | " | | H. G. FISCHER & CO. 2335 WABANSIA AVE. CHICAGO, ILL | CAT. NO. |
| PATT. | | " | | | PART NO. 9295 |

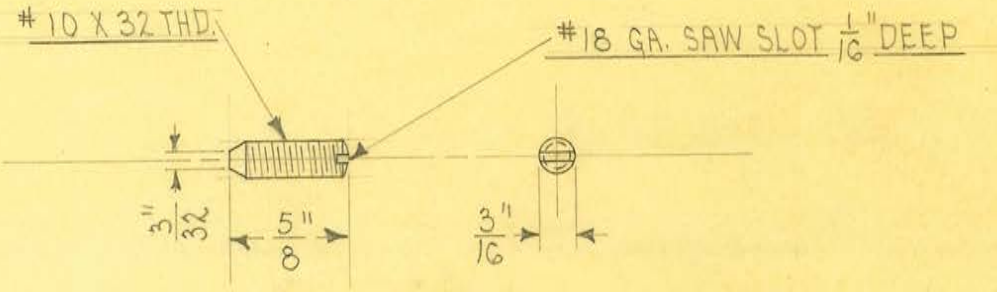


3 REQUIRED

OBSOLETE

| | | | | |
|---|---|---|---|---|
| SIZE | 3/16" | ISSUE 11-20-34 | A.E. | TITLE: PORTABLE SHOCKPROOF X-RAY HORIZONTAL SLIDE SET SCREW |
| KIND | SCREW STOCK | CHANGED | | |
| SHAPE | | " | | |
| FINISH | CAD. #23 | " | | |
| TEMP. | | " | | |
| PATT. | | " | | |

H. G. FISCHER & CO.
2335 WABANSIA AVE.
CHICAGO, ILL

CAT. NO.

PART NO. 9296

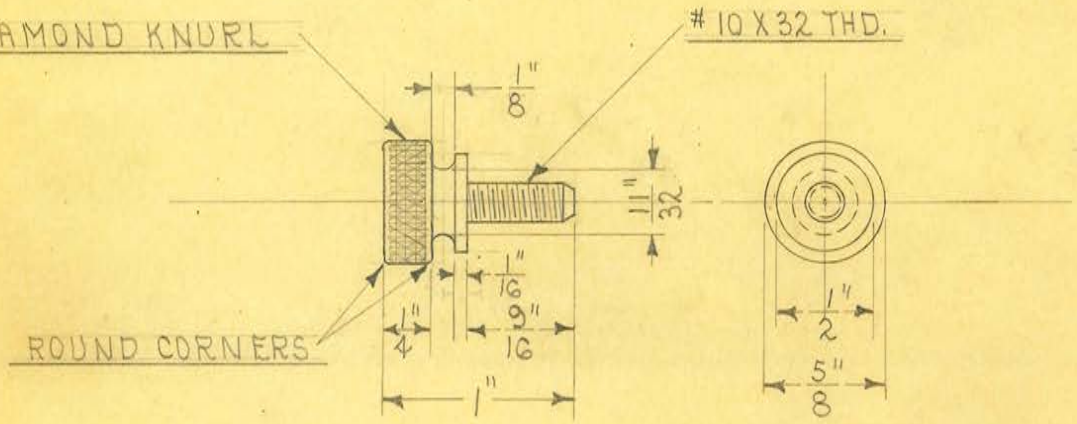


1 REQUIRED

OBSOLETE

| | | | | |
|---|---|---|---|---|
| SIZE | 5/8" | ISSUE 11-26-34 | N.E. | TITLE: PORTABLE SHOCKPROOF X-RAY HORIZONTAL SLIDE THUMB SCREW |
| KIND | BRASS ROD | CHANGED | | |
| SHAPE | | " | | |
| FINISH | CHROME #2 | " | | |
| TEMP. | | " | | |
| PATT. | | " | | |

H. G. FISCHER & Co.
2335 WABANSIA AVE.
CHICAGO, ILL

CAT. NO.

PART NO. 9297

67

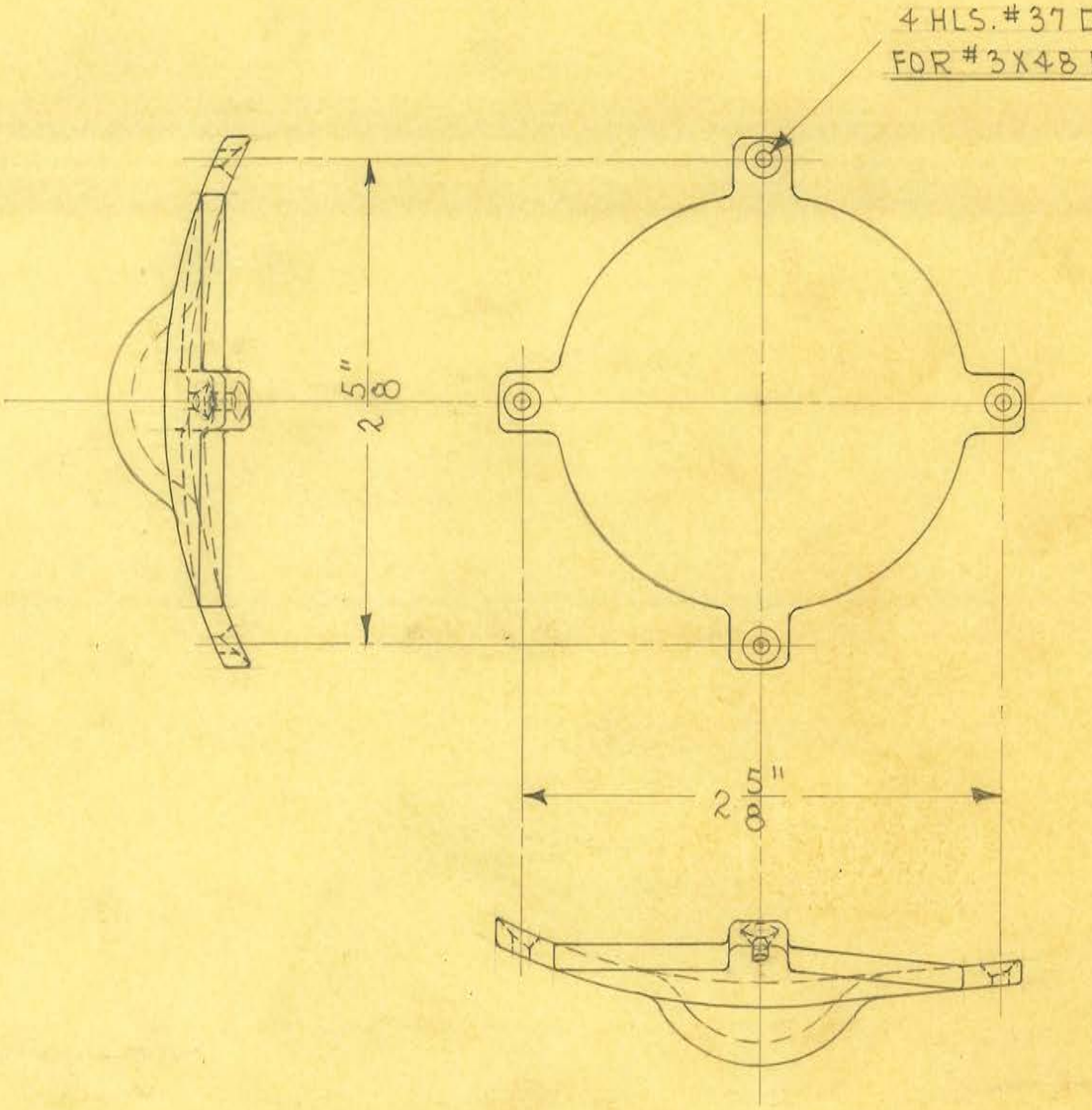


2 REQUIRED

OBSOLETE

| | | | |
|---|---|---|---|
| SIZE | XR11 | ISSUE 6-21-37 | H.E. |
| KIND | ALUM. CASTING | CHANGED | |
| SHAPE | | " | |
| FINISH | | " | |
| TEMP. | | " | |
| PATT. | 1809-1109 | " | |

**TITLE:** "DSP-20" TUBE HOUSING COVER - DIRECT & STRAY RADIATION ABSORBTION PLATE

| | | |
|---|---|---|
| H. G. FISCHER & CO. 2335 WABANSIA AVE. CHICAGO, ILL. | CAT. NO. | PART NO. 9299 1/2 F |

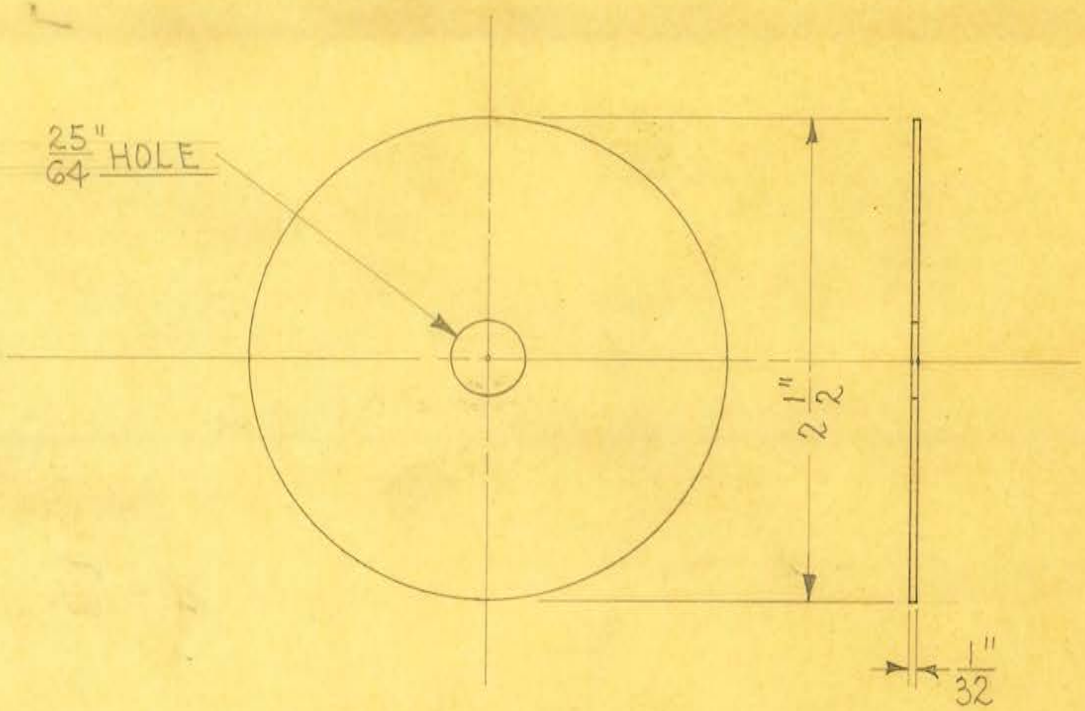


1 REQUIRED

OBSOLETE

| | | | |
|---|---|---|---|
| SIZE | 1/32" - #60 | ISSUED 9-21-36 | J.F.E. |
| KIND | SERVICE SHEET | CHANGED | |
| SHAPE | | " | |
| FINISH | | " | |
| TEMP. | | " | |
| PATT. | | " | |

**TITLE:** FISCHER "DSP-20" TUBE HOUSING
DOUBLE SWIVEL FRICTION WASHER

H. G. FISCHER & CO.
2335 WABANSIA AVE.
CHICAGO, ILL.

CAT. NO.

PART NO. 9300 1/2

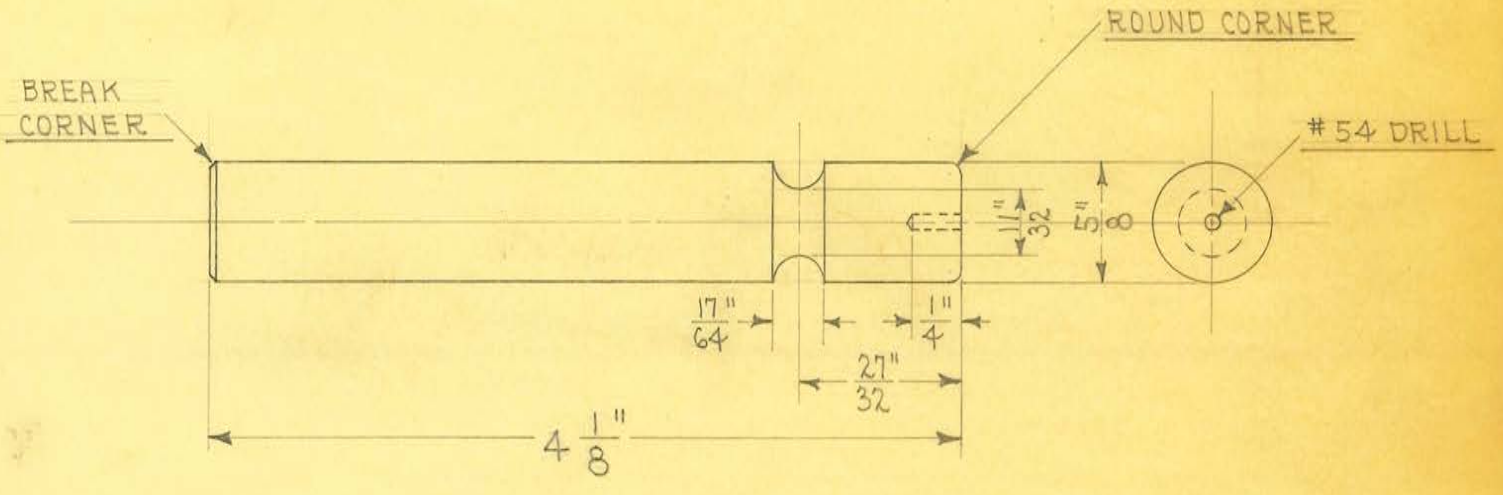


1 REQUIRED

OBSOLETE

| | | | | |
|---|---|---|---|---|
| SIZE | 5/8" | ISSUE 1-11-34 | A.E. | **TITLE:** PORTABLE SHOCKPROOF X-RAY TUBE HOUSING SUPPORT SHAFT |
| KIND | C.R. STEEL | CHANGED | | |
| SHAPE | | " | | |
| FINISH | CAD. #23 | " | | |
| TEMP. | | " | | |
| PATT. | | " | | |

H. G. FISCHER & CO.
2335 WABANSIA AVE.
CHICAGO, ILL

CAT. NO.

PART NO. 9301

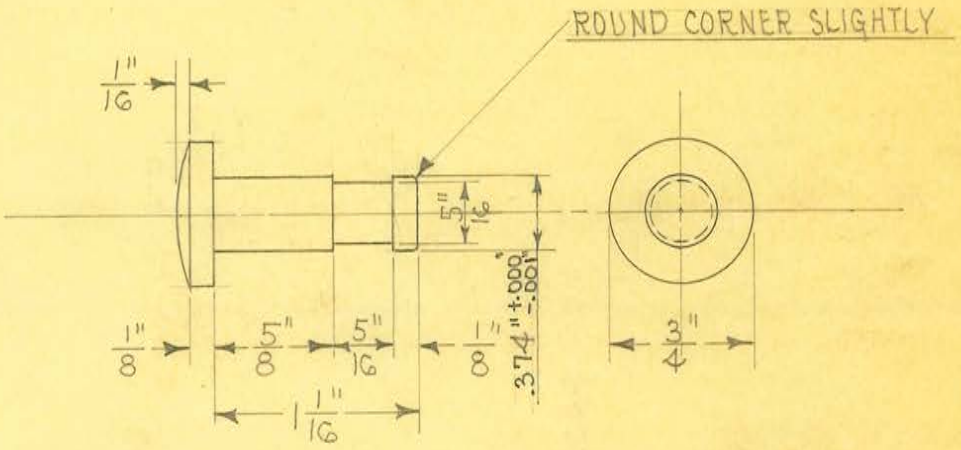


1 REQUIRED

OBSOLETE

| | | | |
|---|---|---|---|
| SIZE | 3/4" DIA. | ISSUE 1-12-35 | A.E. |
| KIND | C.R. STEEL | CHANGED | |
| SHAPE | | " | |
| FINISH | CHROME #2 | " | |
| TEMP. | | " | |
| PATT. | | " | |

**TITLE:** PORTABLE SHOCKPROOF X-RAY TUBE HOUSING
DOUBLE SWIVEL SHOULDERED STUD

H. G. FISCHER & CO.
2335 WABANSIA AVE.
CHICAGO, ILL

CAT. NO.

PART NO. 9302

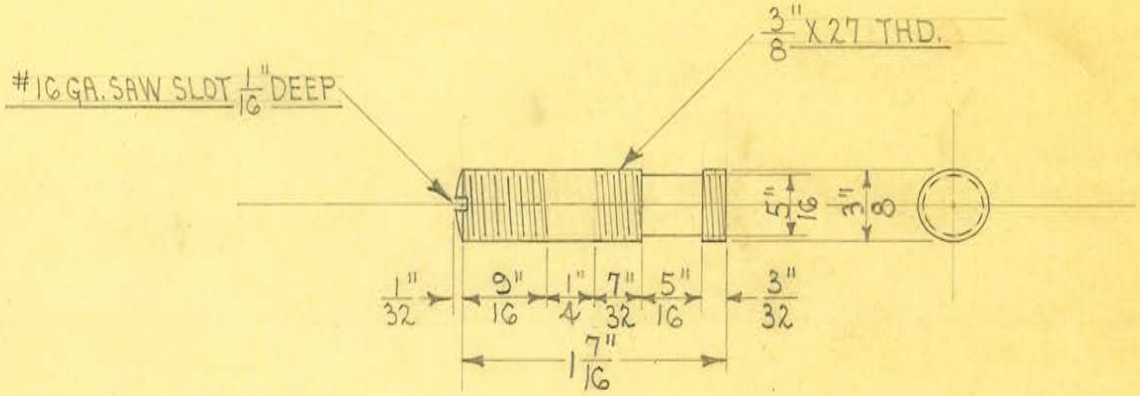


1 REQUIRED

OBSOLETE

| | | | |
|---|---|---|---|
| SIZE | 3/8" DIA. | ISSUE 1-12-35 | A.E. |
| KIND | C.R. STEEL | CHANGED | |
| SHAPE | | " | |
| FINISH | CAD. #23 | " | |
| TEMP. | | " | |
| PATT. | | " | |

**TITLE:** PORTABLE SHOCKPROOF X-RAY TUBE HOUSING
DOUBLE SWIVEL THREADED STUD

H. G. FISCHER & CO.
2335 WABANSIA AVE.
CHICAGO, ILL

CAT. NO.

PART NO. 9303

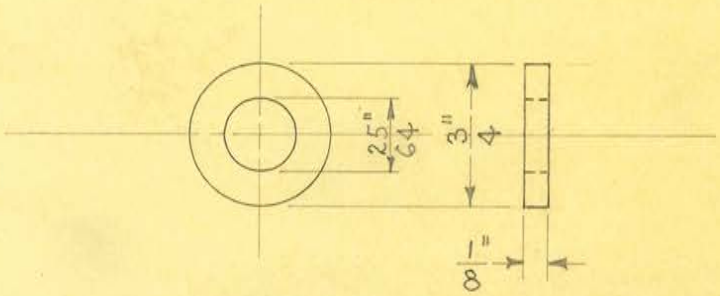


1 REQUIRED

OBSOLETE XX SEE NEW TRACING

| | | | | |
|---|---|---|---|---|
| SIZE | 3/4" DIA. | ISSUE 1-11-35 | A.E. | TITLE: PORTABLE SHOCKPROOF X-RAY TUBE HOUSING DOUBLE SWIVEL CLAMP WASHER |
| KIND | C.R. STEEL | CHANGED | | |
| SHAPE | | " | | |
| FINISH | CAD. # 23 | " | | |
| TEMP. | | " | | |
| PATT. | | " | | |

H. G. FISCHER & CO.
2335 WABANSIA AVE.
CHICAGO, ILL

CAT. NO.

PART NO. 9304

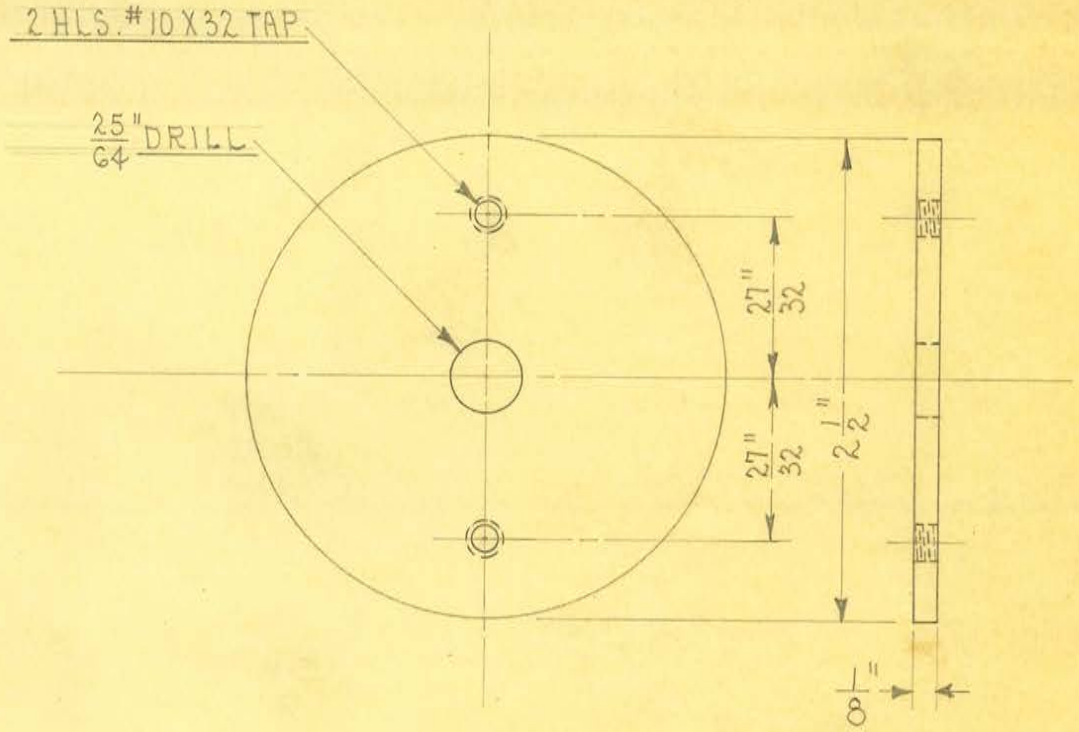


1 REQUIRED

OBSOLETE

| | | | | |
|---|---|---|---|---|
| SIZE | 1/8" SHEET | ISSUE 1-11-35 | W.E. | TITLE: PORTABLE SHOCKPROOF X-RAY TUBE HOUSING DOUBLE SWIVEL FRICTION PLATE |
| KIND | C.R. STEEL | CHANGED | | |
| SHAPE | | " | | |
| FINISH | CHROME #2 | " | | |
| TEMP. | | " | | |
| PATT. | | " | | |

H. G. FISCHER & CO.
2335 WABANSIA AVE.
CHICAGO, ILL

CAT. NO.

PART NO. 9305

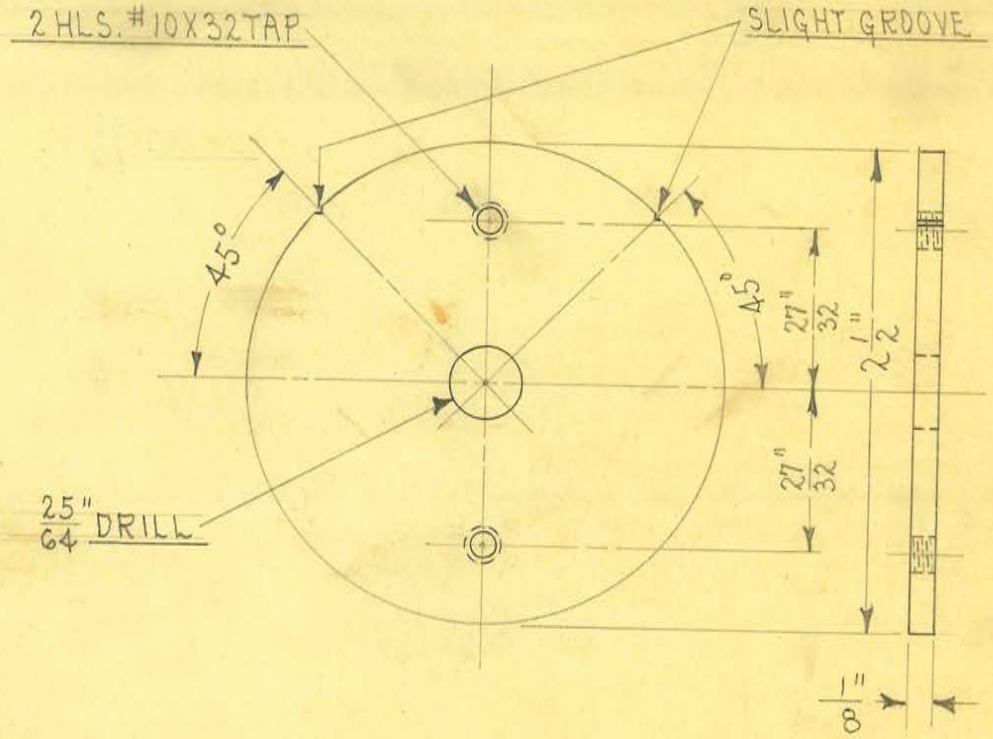


1 REQUIRED

OBSOLETE

| | | | | |
|---|---|---|---|---|
| SIZE | 1/8" SHEET | ISSUE 1-21-35 | 24.8. | **TITLE:** PORTABLE SHOCKPROOF X-RAY TUBE HOUSING DOUBLE SWIVEL FRICTION PLATE & INDICATOR |
| KIND | C.R. STEEL | CHANGED | | |
| SHAPE | | " | | |
| FINISH | CHROME #2 | " | | |
| TEMP. | | " | | |
| PATT. | | " | | |

H. G. FISCHER & CO.
2335 WABANSIA AVE.
CHICAGO, ILL

CAT. NO.

PART NO. 9305 1/2

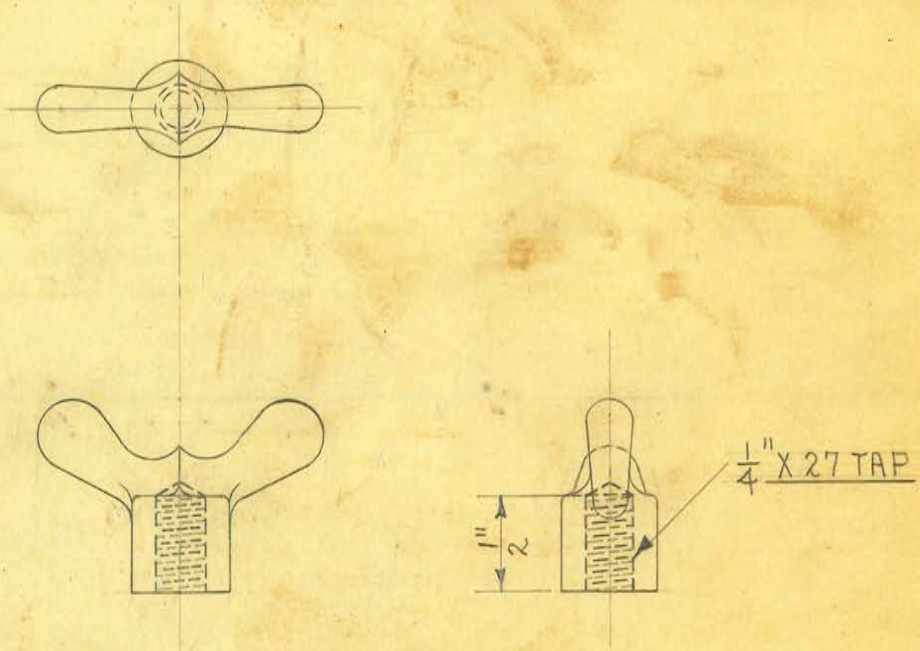


1 REQUIRED

OBSOLETE

| | | | | | |
|---|---|---|---|---|---|
| SIZE | | ISSUE 1-10-35 | A.E. | TITLE: PORTABLE SHOCKPROOF X-RAY TUBE HOUSING SUPP. SHAFT FRICTION WING NUT | |
| KIND | IRON CASTING | CHANGED | | | |
| SHAPE | | " | | | |
| FINISH | BLACK #50 | " | | | |
| TEMP. | | " | | H. G. FISCHER & CO. 2335 WABANSIA AVE. CHICAGO, ILL | CAT. NO. |
| PATT. | 6315-796 | " | | | PART NO. 930GF |

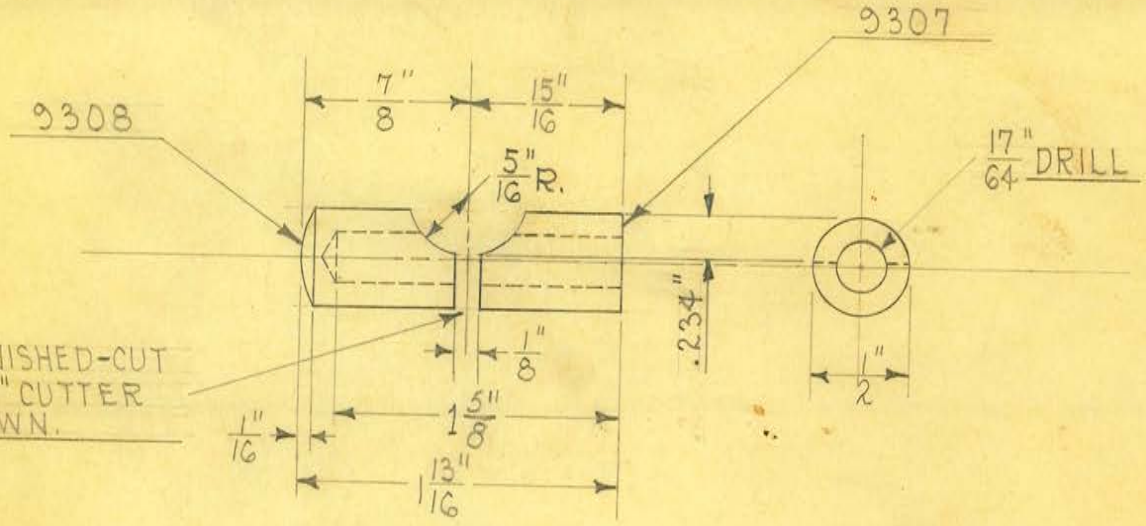


1 REQUIRED

OBSOLETE

| | | | |
|---|---|---|---|
| SIZE | 1/2" | ISSUE 11-28-34 | H.E. |
| KIND | BRASS ROD | CHANGED | |
| SHAPE | | " | |
| FINISH | | " | |
| TEMP. | | " | |
| PATT. | | " | |

**TITLE:** PORTABLE SHOCKPROOF X-RAY TUBE HOUSING
SUPP. SHAFT FRICTION PIECE-UPPER & LOWER

H. G. FISCHER & CO.
2335 WABANSIA AVE.
CHICAGO, ILL

CAT. NO.

PART NO. 9307

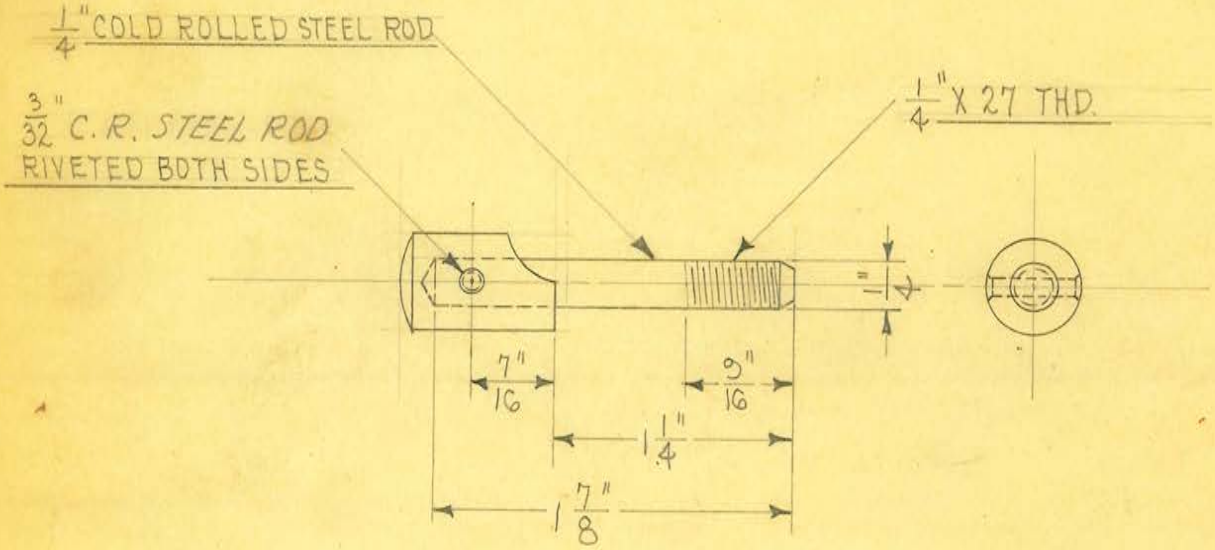


1 REQUIRED

OBSOLETE

| | | | |
|---|---|---|---|
| SIZE | | ISSUE 11-28-34 | A.E. |
| KIND | | CHANGED | |
| SHAPE | | " | |
| FINISH | CAD. #23 | " | |
| TEMP. | | " | |
| PATT. | | " | |

**TITLE:** PORTABLE SHOCKPROOF X-RAY TUBE HOUSING SUPP. SHAFT FRICTION PIECE ASSEM.-LOWER

H. G. FISCHER & CO.
2335 WABANSIA AVE.
CHICAGO, ILL

CAT. NO.

PART NO. 9308G

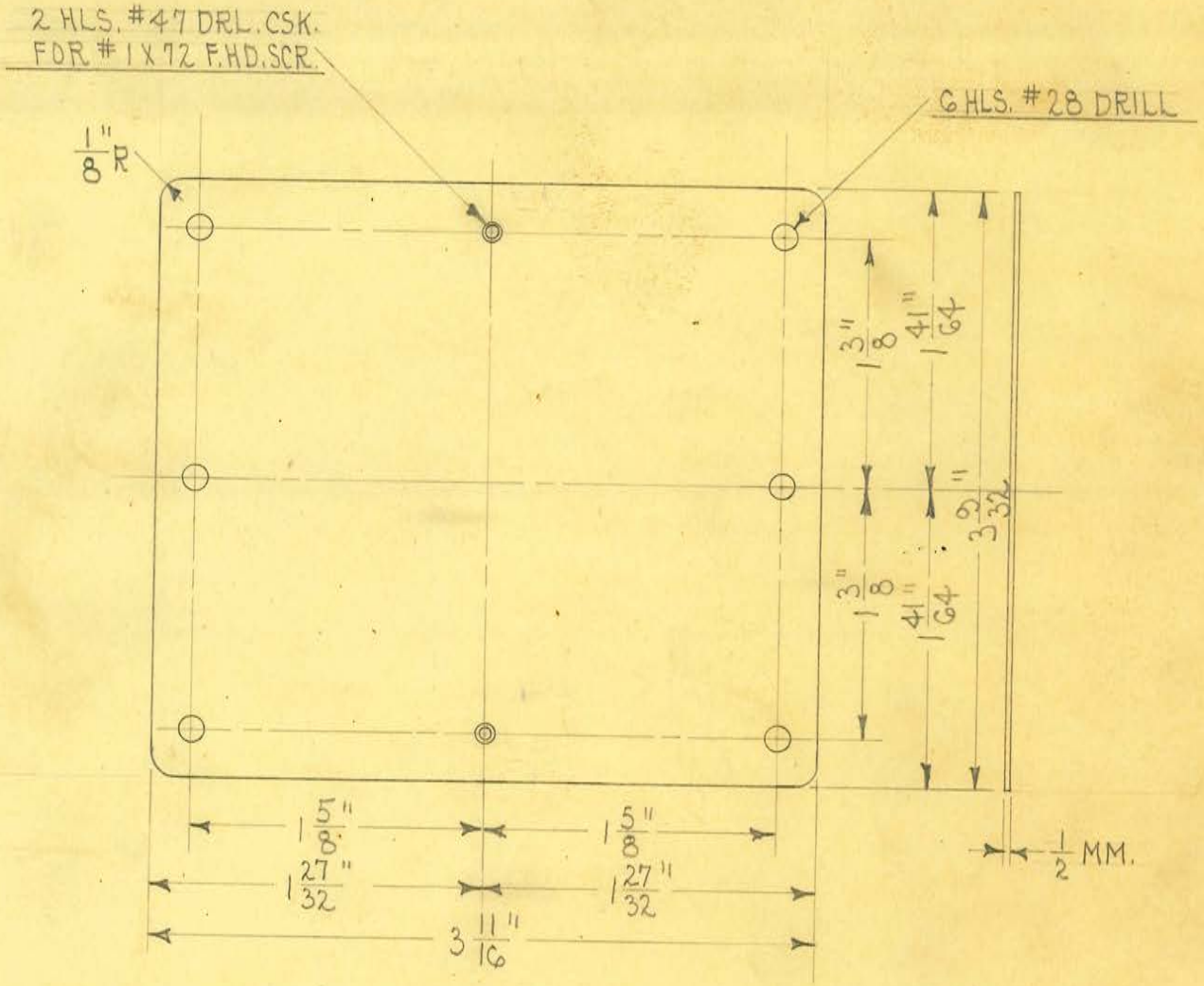


1 REQUIRED

OBSOLETE

| | | | | |
|---|---|---|---|---|
| SIZE | 1/2 MM. | ISSUE 11-14-34 | 2-6 | TITLE: PORTABLE SHOCKPROOF X-RAY TUBE HOUSING FILTER |
| KIND | ALUMINUM | CHANGED | | |
| SHAPE | | " | | |
| FINISH | | " | | |
| TEMP. | | " | | |
| PATT. | | " | | |

H. G. FISCHER & CO.
2935 WABANSIA AVE.
CHICAGO, ILL

CAT. NO.

PART NO. 9309

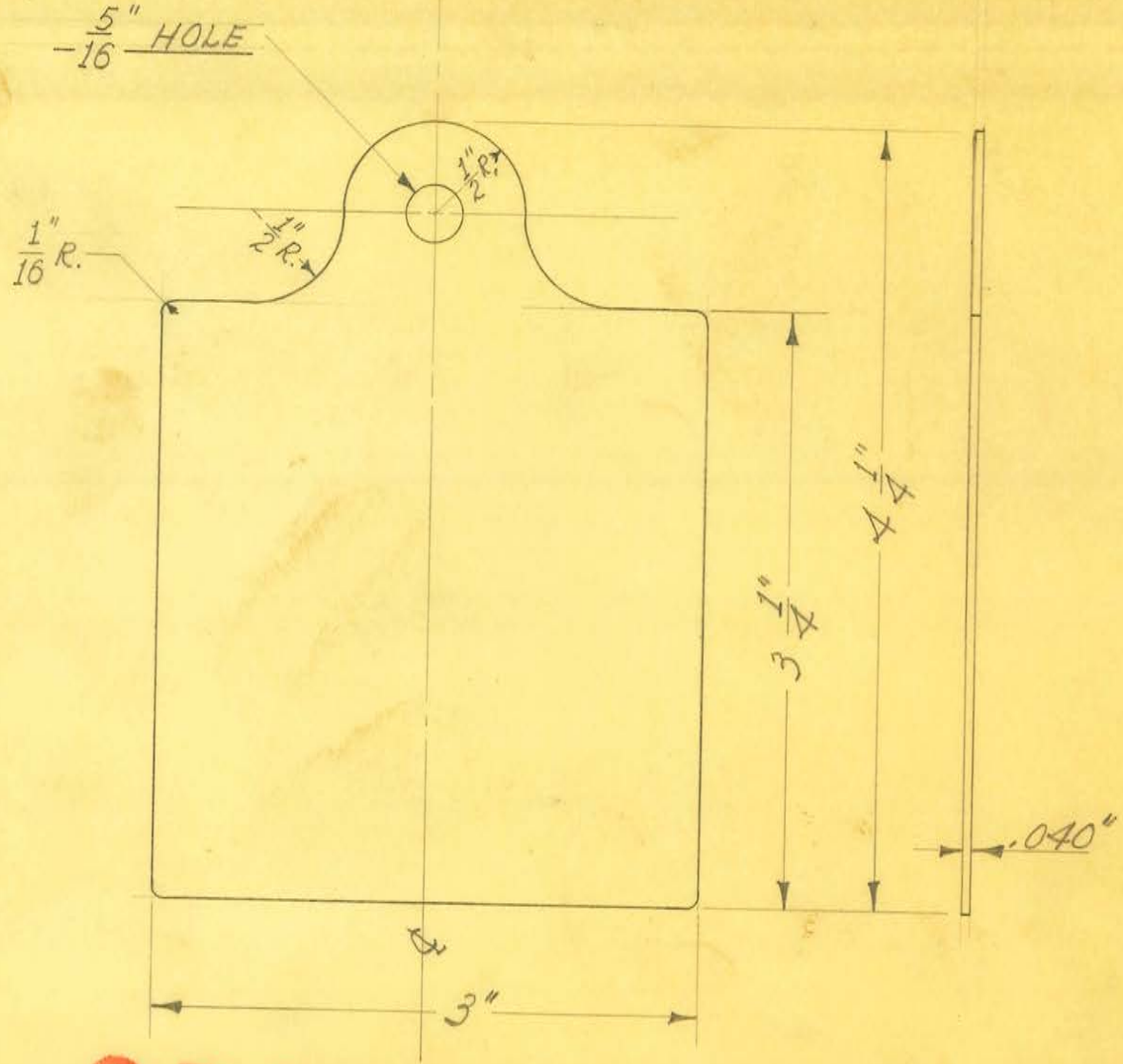


OBSOLETE

| | | | | |
|---|---|---|---|---|
| SIZE | .040" SHEET | ISSUE 12-28-36 | J.W. | TITLE: FISCHER "DSP-20" TUBE HOUSING FILTER -1 M.M. |
| KIND | ALUMINUM | CHANGED | | |
| SHAPE | | " | | |
| FINISH | | " | | |
| TEMP. | | " | | |
| PATT. | | " | | |

H. G. FISCHER & CO.
2335 WABANSIA AVE.
CHICAGO, ILL.

CAT. NO.

PART NO. 9309 1/2

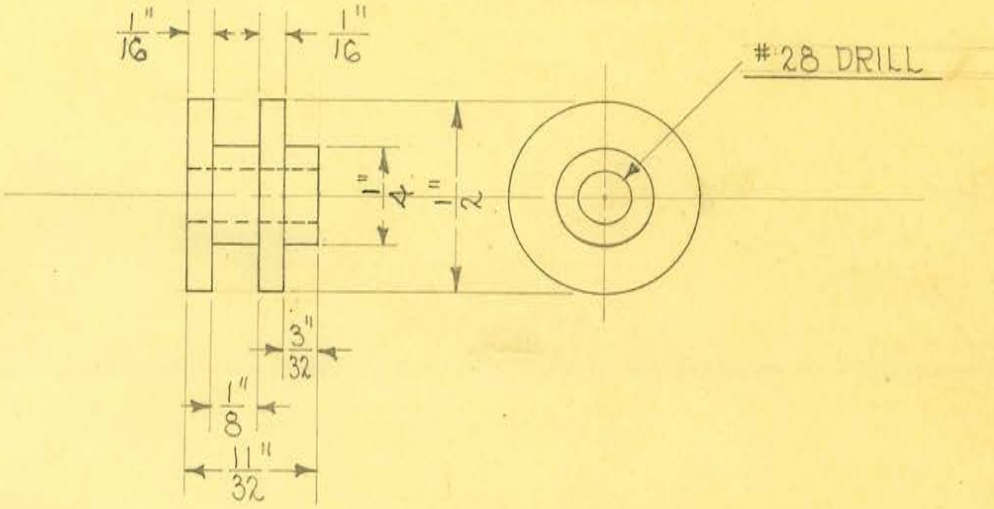


SCALE ÷ 2 DIAMETERS

4 REQUIRED

OBSOLETE

| | | | | |
|---|---|---|---|---|
| SIZE | 1/2" | ISSUE 11-14-34 | J.E. | **TITLE:** PORTABLE SHOCKPROOF X-RAY TUBE HOUSING<br>FILTER SLIDE STUD - PLAIN |
| KIND | BRASS ROD | CHANGED | | |
| SHAPE | | " | | |
| FINISH | CAD. #23 | " | | |
| TEMP. | | " | | |
| PATT. | | " | | |

H. G. FISCHER & CO.
2335 WABANSIA AVE.
CHICAGO, ILL

CAT. NO.

PART NO. 9310

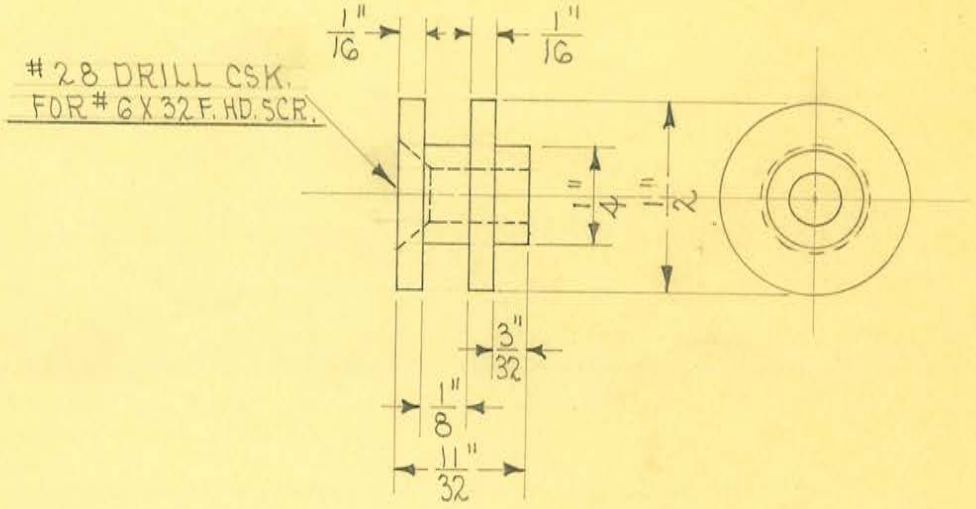


SCALE ÷ 2 DIAMETERS

2 REQUIRED

OBSOLETE

| | | | | |
|---|---|---|---|---|
| SIZE | 1/2" | ISSUE 11-14-34 | A.E. | **TITLE:** PORTABLE SHOCKPROOF X-RAY TUBE HOUSING FILTER SLIDE STUD - CSK. |
| KIND | BRASS ROD | CHANGED | | |
| SHAPE | | " | | |
| FINISH | CAD. #23 | " | | |
| TEMP. | | " | | |
| PATT. | | " | | |

H. G. FISCHER & CO.
2335 WABANSIA AVE.
CHICAGO, ILL

CAT. NO.

PART NO. 9311

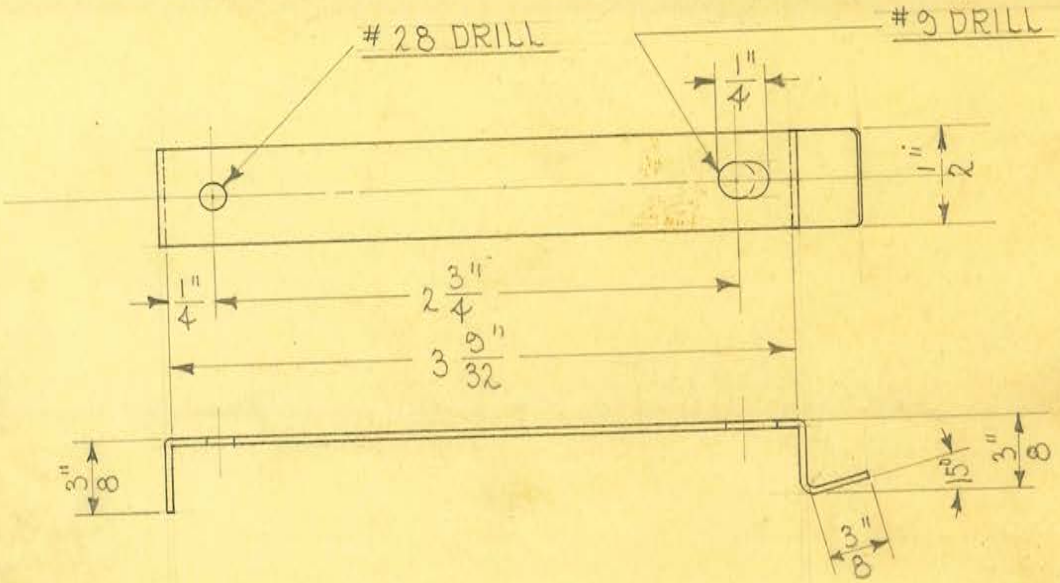


2 REQUIRED

DEVELOPED LENGTH- 4 11/32"

OBSOLETE

| | | | |
|---|---|---|---|
| SIZE | ½" X 22 GA. (.0253) | ISSUE 11-16-34 | H.E. |
| KIND | PHOS. BRONZE | CHANGED | |
| SHAPE | | " | |
| FINISH | CAD. #23 | " | |
| TEMP. | | " | |
| PATT. | | " | |

**TITLE:** PORTABLE SHOCKPROOF X-RAY TUBE HOUSING
FILTER SPRING STOP

H. G. FISCHER & CO.
2335 WABANSIA AVE.
CHICAGO, ILL

CAT. NO.

PART NO. 9312

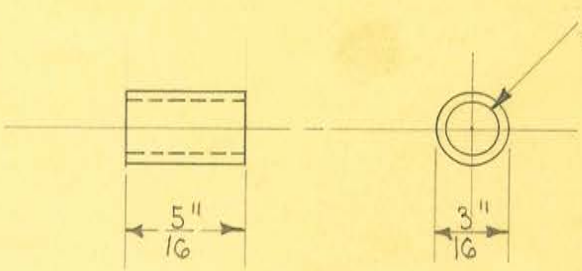


2 REQUIRED

SCALE ~ 2 DIAMETERS

OBSOLETE

| | | | | |
|---|---|---|---|---|
| SIZE | 3/16" | ISSUE 11-14-34 | A.E. | **TITLE:** PORTABLE SHOCKPROOF X-RAY TUBE HOUSING FILTER SPRING BUSHING |
| KIND | C.R. STEEL | CHANGED | | |
| SHAPE | | " | | |
| FINISH | CAD. #23 | " | | |
| TEMP. | | " | | |
| PATT. | | " | | |

H. G. FISCHER & CO.
2335 WABANSIA AVE.
CHICAGO, ILL

CAT. NO.

PART NO. 9313

ROUND CORNERS

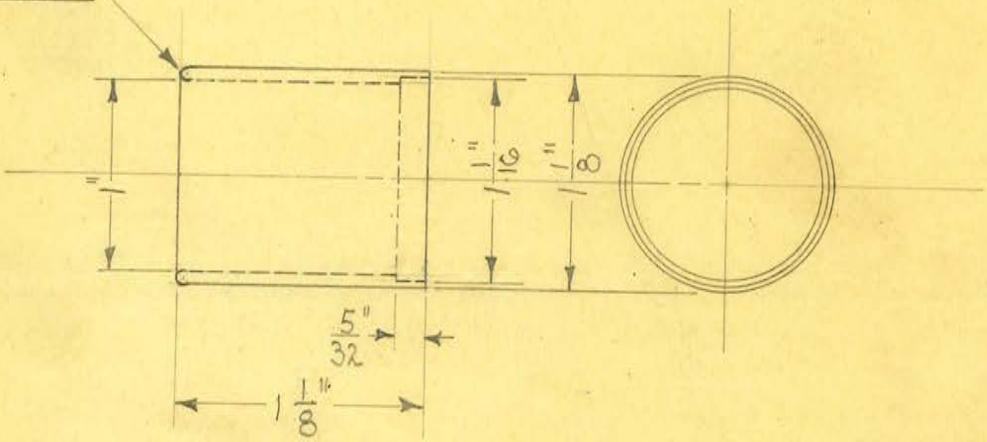


1 REQUIRED

OBSOLETE

| | | | |
|---|---|---|---|
| SIZE | 1⅛" O.D. X 1" I.D. | ISSUE 11-28-34 | H.E. |
| KIND | NAT. BAKELITE | CHANGED | |
| SHAPE | | " | |
| FINISH | | " | |
| TEMP. | | " | |
| PATT. | | " | |

**TITLE:** PORTABLE SHOCKPROOF X-RAY TUBE CAP SLEEVE

H. G. FISCHER & Co.
2335 WABANSIA AVE.
CHICAGO, ILL

CAT. NO.

PART NO. 9314

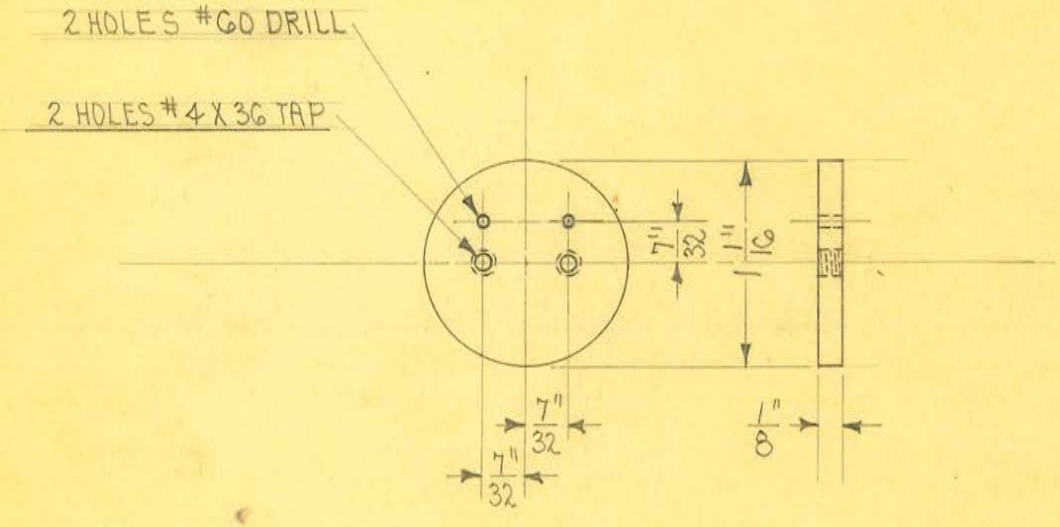


1 REQUIRED

OBSOLETE

| | | | | |
|---|---|---|---|---|
| SIZE | 1/8" SHEET | ISSUE 11-28-34 | A.E. | TITLE: PORTABLE SHOCKPROOF X-RAY TUBE CAP END |
| KIND | BAKELITE | CHANGED | | |
| SHAPE | | " | | |
| FINISH | | " | | |
| TEMP. | | " | | H. G. FISCHER & CO. 2335 WABANSIA AVE. CHICAGO, ILL. / CAT. NO. / PART NO. 9315 |
| PATT. | | " | | |

#18 GA. SAW SLOT $\frac{3}{64}$" DEEP

#4 X 36 TAP

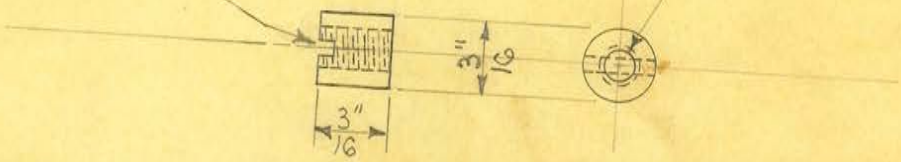


SCALE ~ 2 DIAMETERS

2 REQUIRED

OBSOLETE

| | | | | |
|---|---|---|---|---|
| E | 3/16" | ISSUE 12-5-34 | J.E. | TITLE: PORTABLE SHOCKPROOF X-RAY TUBE CAP NUT |
| D | BRASS ROD | CHANGED | | |
| PE | | " | | |
| SH | | " | | |
| P. | | " | | |
| T. | | " | | |

H. G. FISCHER & CO.
2335 WABANSIA AVE.
CHICAGO, ILL

CAT. NO.

PART NO. 9316

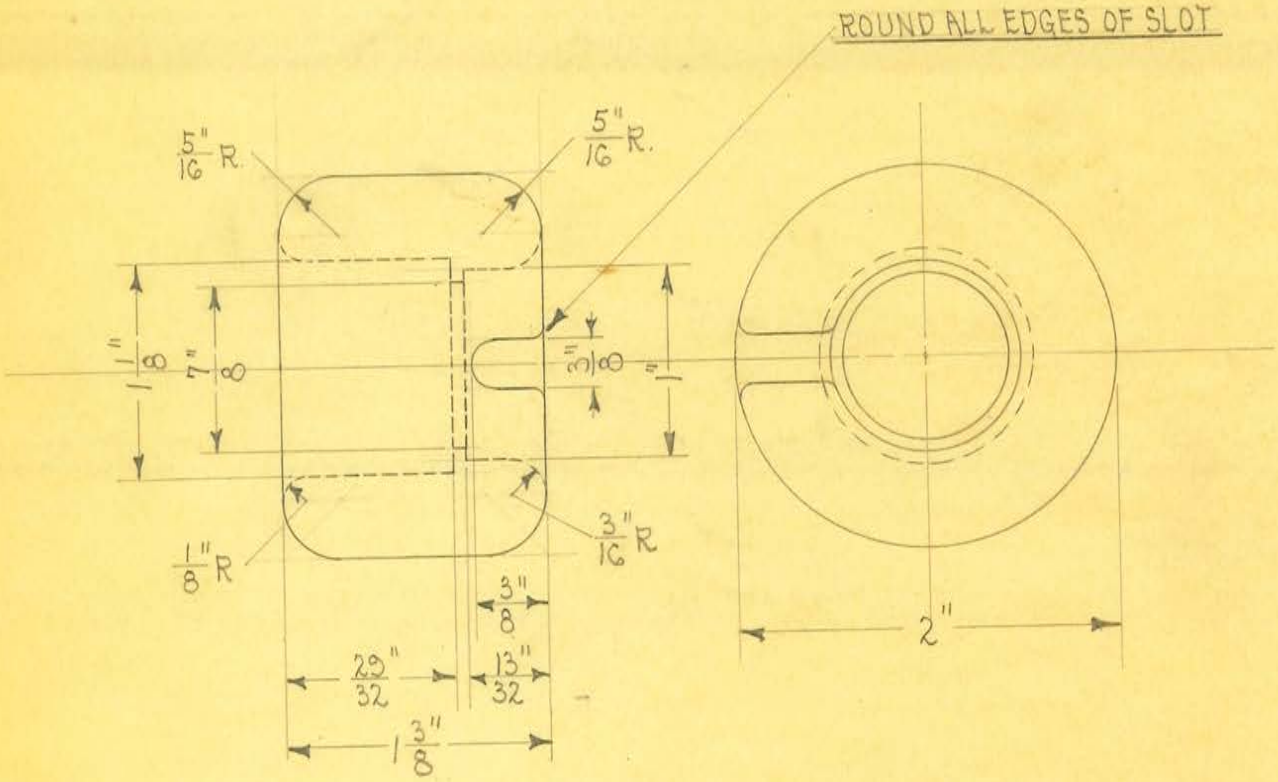


1 REQUIRED

OBSOLETE

| | | | | |
|---|---|---|---|---|
| SIZE | 2" | ISSUE 12-6-34 | 24.8 | TITLE: PORTABLE SHOCKPROOF X-RAY TUBE CATHODE SPHERE |
| KIND | ALUM. ROD | CHANGED | | |
| SHAPE | | " | | |
| FINISH | POL. & BUFF | " | | |
| TEMP. | | " | | |
| PATT. | | " | | |

H. G. FISCHER & CO.
2335 WABANSIA AVE.
CHICAGO, ILL

CAT. NO.

PART NO. 9317

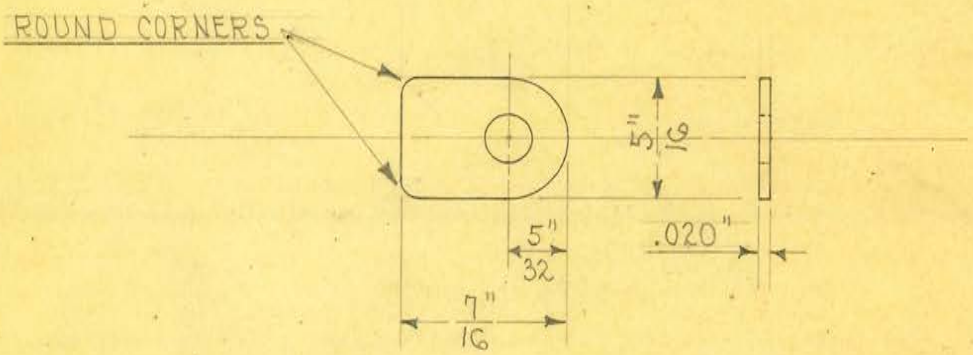


1 REQUIRED

SCALE ~ 1" = 1/2"

OBSOLETE

| | | | | |
|---|---|---|---|---|
| SIZE | .020" | ISSUE 12-1-34 | H.E. | **TITLE:** PORTABLE SHOCKPROOF X-RAY TUBE CATHODE SPHERE GROUND STRIP |
| KIND | PHOS. BRONZE | CHANGED | | |
| SHAPE | | " | | |
| FINISH | | " | | |
| TEMP. | | " | | |
| PATT. | | " | | |

| | | |
|---|---|---|
| H. G. FISCHER & CO. 2335 WABANSIA AVE. CHICAGO, ILL | CAT. NO. | PART NO. 9318 |

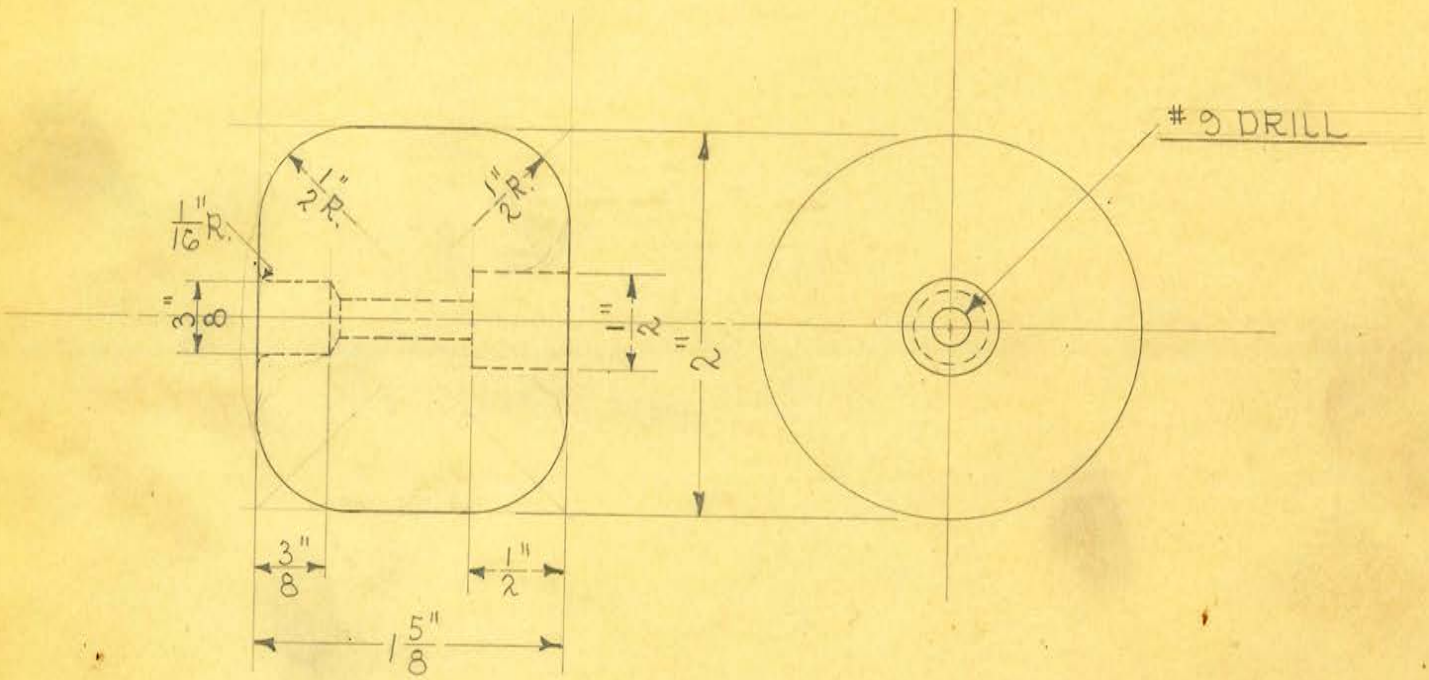


1 REQUIRED

OBSOLETE

| | | | | |
|---|---|---|---|---|
| SIZE | 2" | ISSUE 11-26-34 | A.E. | TITLE: PORTABLE SHOCKPROOF X-RAY TUBE ANODE SPHERE |
| KIND | ALUM. ROD | CHANGED | | |
| SHAPE | | " | | |
| FINISH | POL. & BUFF | " | | |
| TEMP. | | " | | |
| PATT. | | " | | |

H. G. FISCHER & CO.
2335 WABANSIA AVE.
CHICAGO, ILL

CAT. NO.

PART NO. 9319

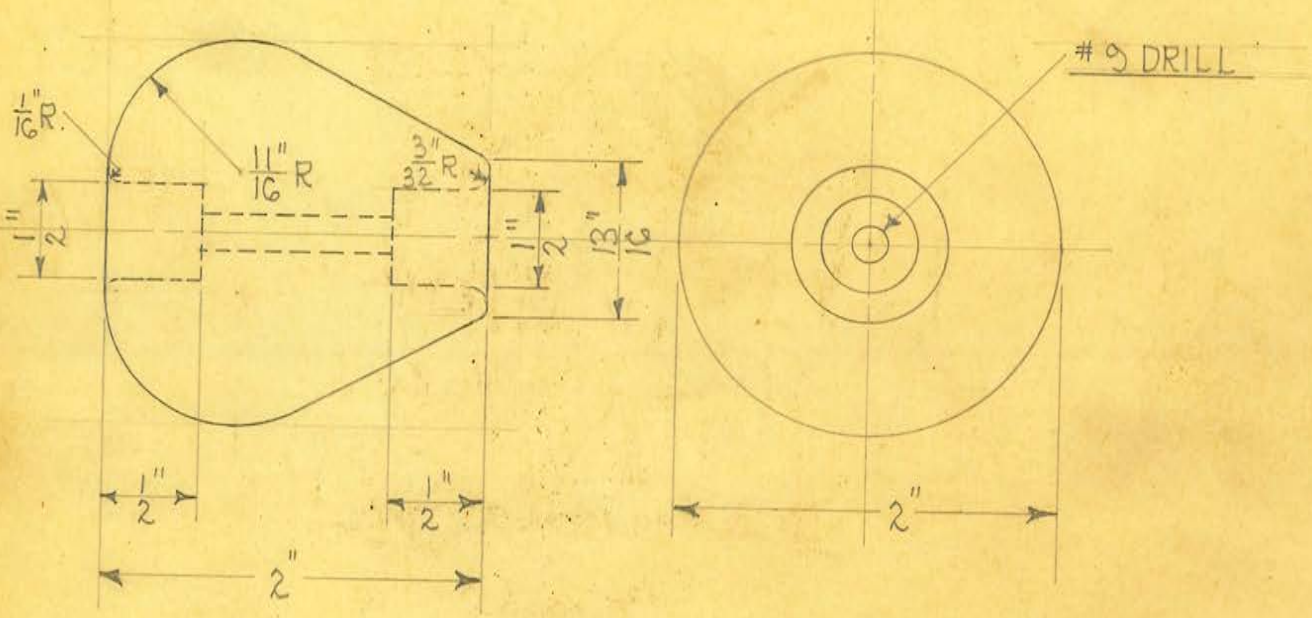


1 REQUIRED

OBSOLETE

| | | | | |
|---|---|---|---|---|
| SIZE | 2" | ISSUE 7-30-35 | A.E. | TITLE: FISCHER "DSP-20" TUBE ANODE SPHERE |
| KIND | ALUM. ROD | CHANGED | | |
| SHAPE | | " | | |
| FINISH | POL. & BUFF | " | | |
| TEMP. | | " | | |
| PATT. | | " | | |

H. G. FISCHER & CO.
2335 WABANSIA AVE.
CHICAGO, ILL.

CAT. NO.

PART NO. 9319A

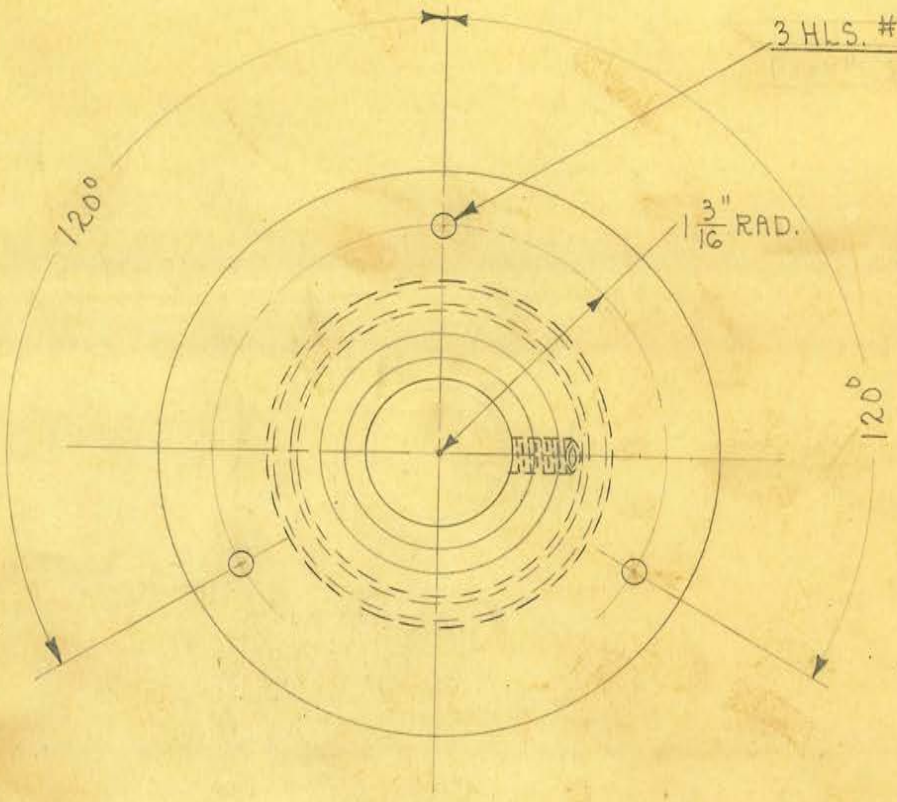


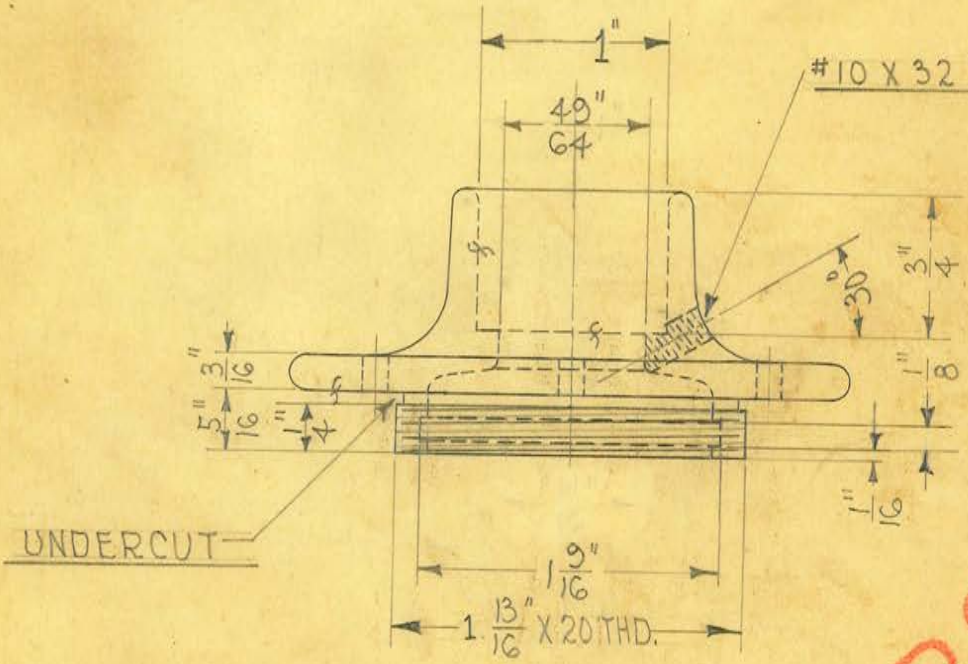


2 REQUIRED

OBSOLETE

| | | | |
|---|---|---|---|
| SIZE | | ISSUE 1-8-35 | A.E. |
| KIND | BRASS CASTING | CHANGED 3-10-36 | A.E. |
| SHAPE | | " 8-4-36 | A.E. |
| FINISH | | " | |
| TEMP. | | " | |
| PATT. | 5852-794 | " | |

**TITLE:** PORTABLE SHOCKPROOF X-RAY TRANSFORMER STRESS CONE CAP

H. G. FISCHER & CO.
2335 WABANSIA AVE.
CHICAGO, ILL.

CAT. NO.

PART NO. 9324AFB

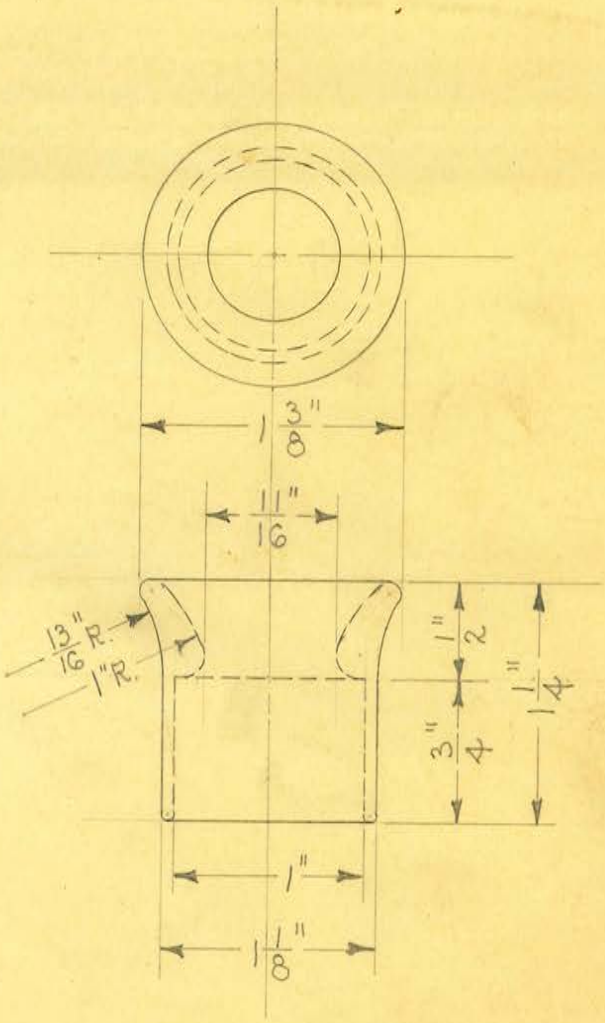


4 REQUIRED

OBSOLETE

Obsolete

| | | | | |
|---|---|---|---|---|
| SIZE | 1 3/8" | ISSUE 11-21-34 | A.E. | **TITLE:** PORTABLE SHOCKPROOF X-RAY TRANS. & TUBE HEAD CABLE SUPPORT BUSHING |
| KIND | BRASS ROD | CHANGED | | |
| SHAPE | | " | | |
| FINISH | | " | | |
| TEMP. | | " | | |
| PATT. | | " | | |

H. G. FISCHER & CO.
2335 WABANSIA AVE.
CHICAGO, ILL.

CAT. NO.

PART NO. 9326

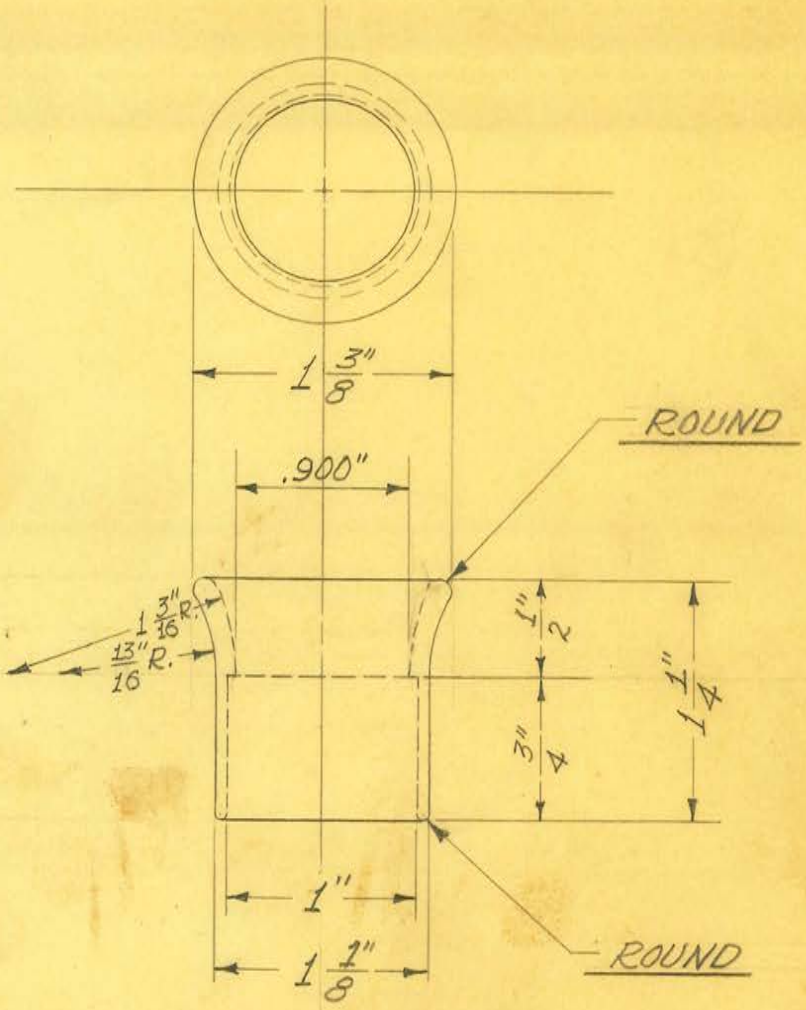


OBSOLETE

4 REQUIRED

| | | | |
|---|---|---|---|
| SIZE | 1 3/8" DIAM. | ISSUE 7-17-39 | J.W. |
| KIND | BRASS ROD | CHANGED | |
| SHAPE | | " | |
| FINISH | | " | |
| TEMP. | | " | |
| PATT. | | " | |

**TITLE:** FISCHER "DSP-20" TRANSF. & TUBE HEAD CABLE SUPPORT BUSHING

H. G. FISCHER & CO.
2335 WABANSIA AVE.
CHICAGO, ILL.

CAT. NO.

PART NO. 9326A

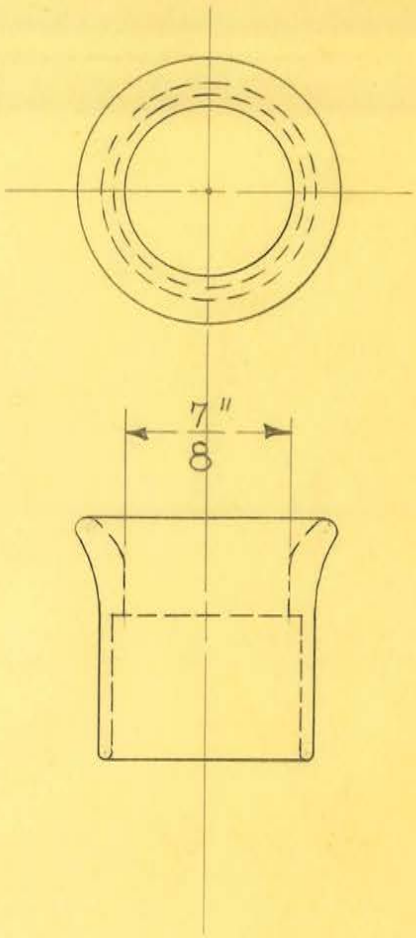


4 REQUIRED

OBSOLETE

| | | | |
|---|---|---|---|
| SIZE | FROM 9326 | ISSUE 5-18-43 | HE. |
| KIND | | CHANGED | |
| SHAPE | | " | |
| FINISH | | " | |
| TEMP. | | " | |
| PATT. | | " | |

**TITLE:** FISCHER SHOCKPROOF DENTAL "X"-RAY TUBE HEAD CABLE SUPPORT BUSHING (FOR OVERSIZE CABLE FOR OLD STYLE UNITS)

H. G. FISCHER & CO.
2335 WABANSIA AVE.
CHICAGO, ILL.

CAT. NO.

PART NO. 9326 1/2

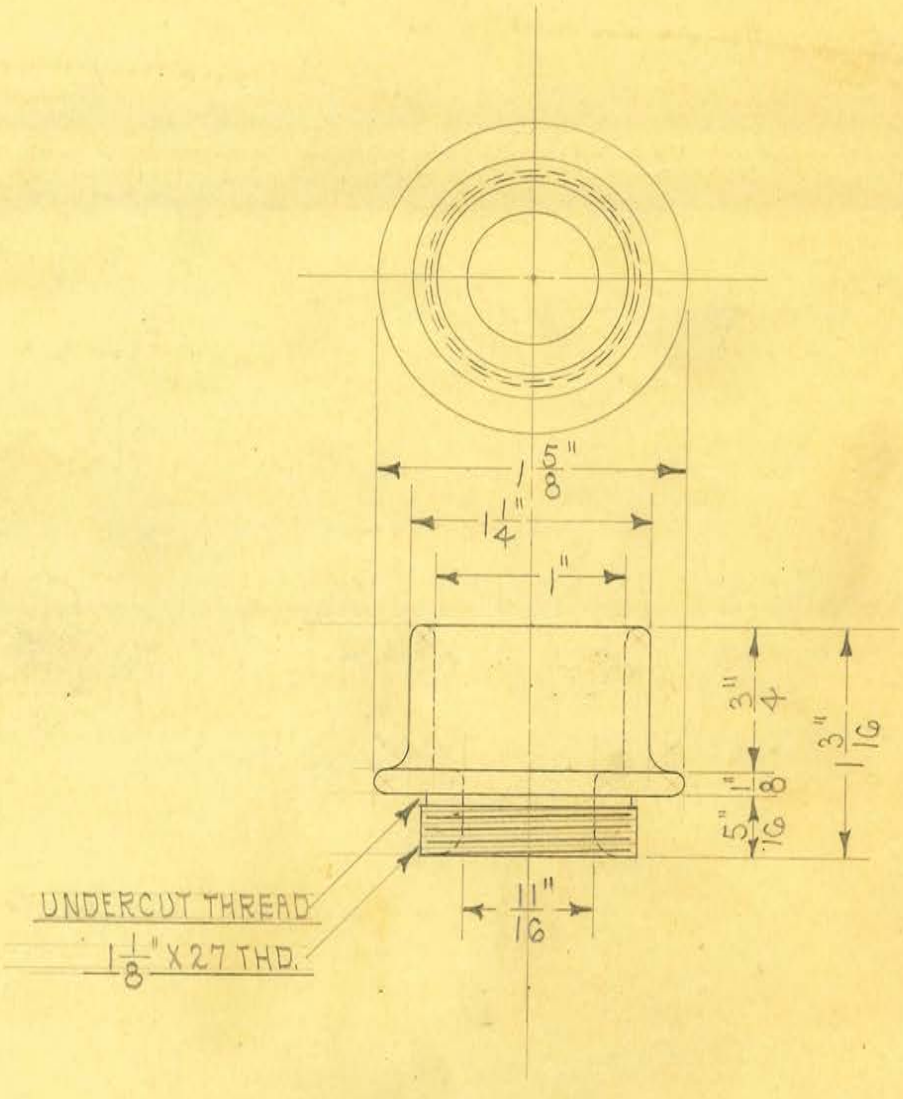


2 REQUIRED

OBSOLETE

| | | | | |
|---|---|---|---|---|
| SIZE | 1 5/8" | ISSUE 11-21-34 | A.B. | **TITLE:** PORTABLE SHOCKPROOF X-RAY TUBE HEAD STRESS CONE CAP |
| KIND | BRASS ROD | CHANGED | | |
| SHAPE | | " | | |
| FINISH | | " | | |
| TEMP. | | " | | |
| PATT. | | " | | |

H. G. FISCHER & CO.
2335 WABANSIA AVE.
CHICAGO, ILL

CAT. NO.

PART NO. 9327

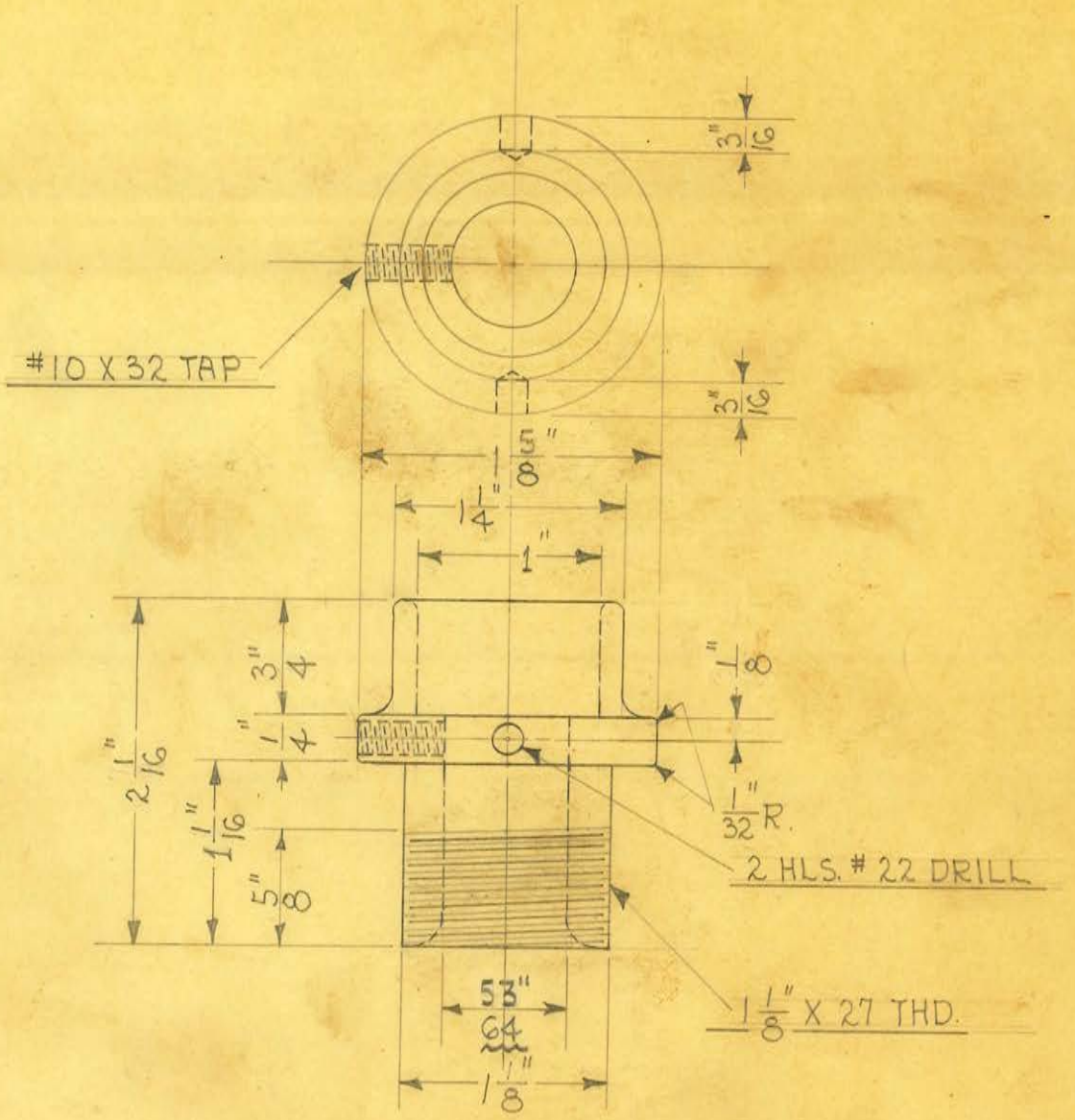


2 REQUIRED

OBSOLETE

| | | | |
|---|---|---|---|
| SIZE | 1 5/8" | ISSUE 7-9-36 | A.E. |
| KIND | BRASS ROD | Per J.B. CHANGED 12-24-41 | J.V.W. |
| SHAPE | | " | |
| FINISH | | " | |
| TEMP. | | " | |
| PATT. | | " | |

**TITLE:** FISCHER "DSP-20" TUBE HEAD STRESS CONE CAP

H. G. FISCHER & CO.
2335 WABANSIA AVE.
CHICAGO, ILL.

CAT. NO.

PART NO. 9327A

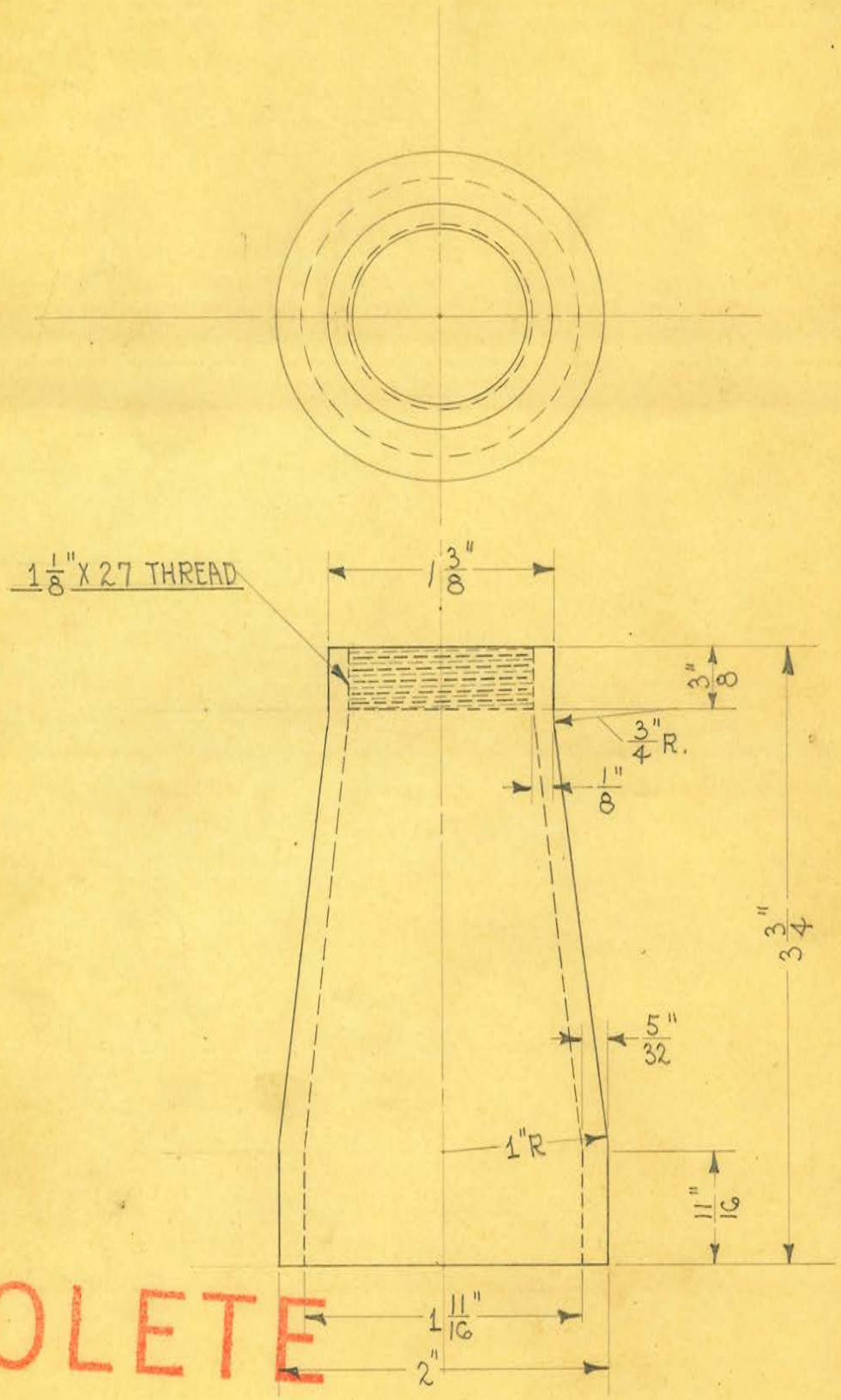


OBSOLETE

| | | | |
|---|---|---|---|
| SIZE | | ISSUE 3-29-35 | A.E. |
| KIND | BAKELITE | CHANGED | |
| SHAPE | | " | |
| FINISH | | " | |
| TEMP. | | " | |
| PATT. | | " | |

**TITLE:**
PORTABLE SHOCKPROOF X-RAY TUBE HEAD
H.T. CABLE INSULATOR

| | | |
|---|---|---|
| H. G. FISCHER & CO.<br>2335 WABANSIA AVE.<br>CHICAGO, ILL. | CAT. NO. | PART NO. 9328A |

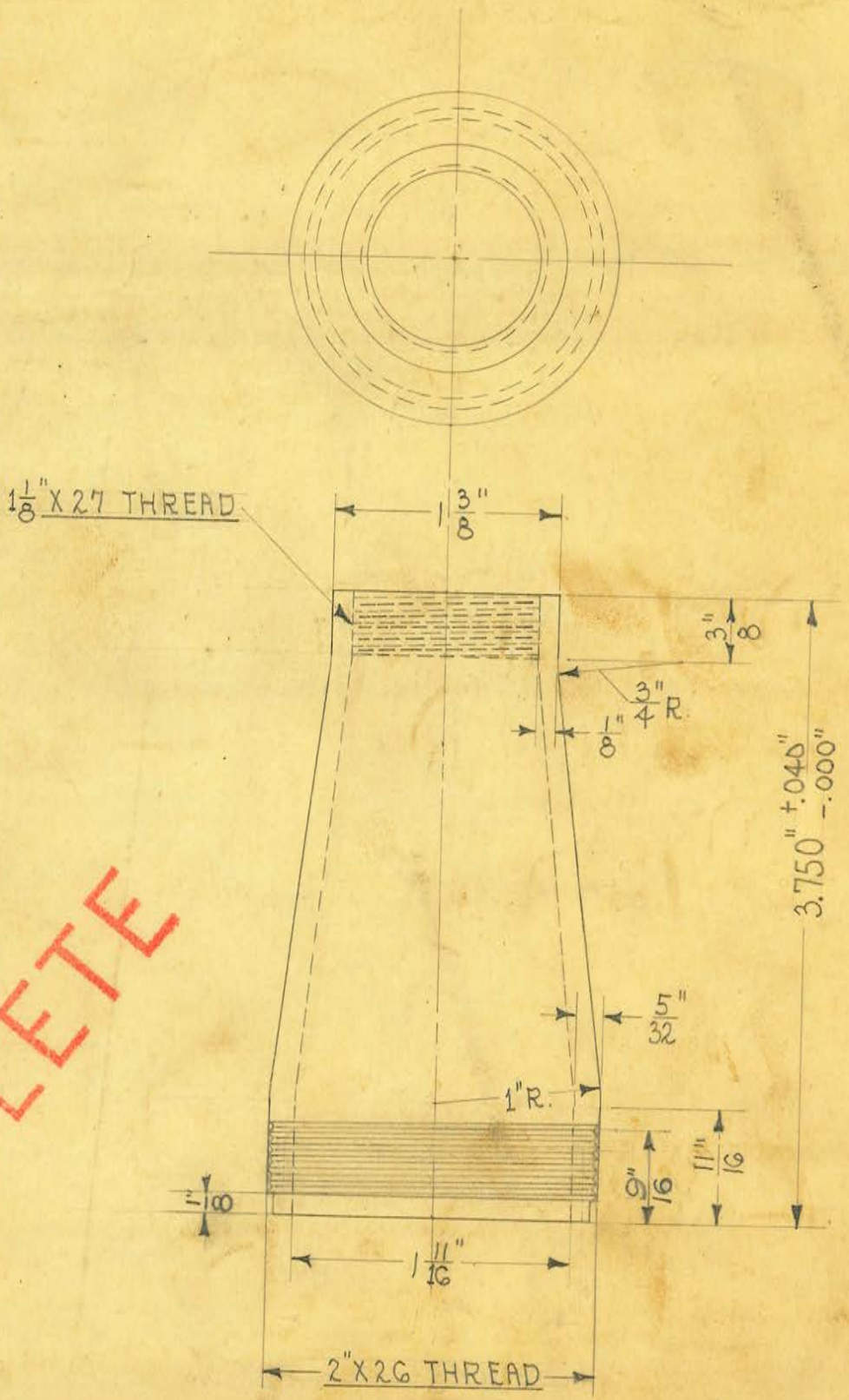


OBSOLETE

| | | | |
|---|---|---|---|
| SIZE | | ISSUE 10-10-34 | J.E. |
| KIND | BAKELITE | CHANGED | |
| SHAPE | | " | |
| FINISH | | " | |
| TEMP. | | " | |
| PATT. | | " | |

**TITLE:** SHOCKPROOF DENTAL "X" TUBE HEAD H.T. CABLE INSULATOR

H. G. FISCHER & CO.
2335 WABANSIA AVE.
CHICAGO, ILL

CAT. NO.

PART NO. 9328 1/2

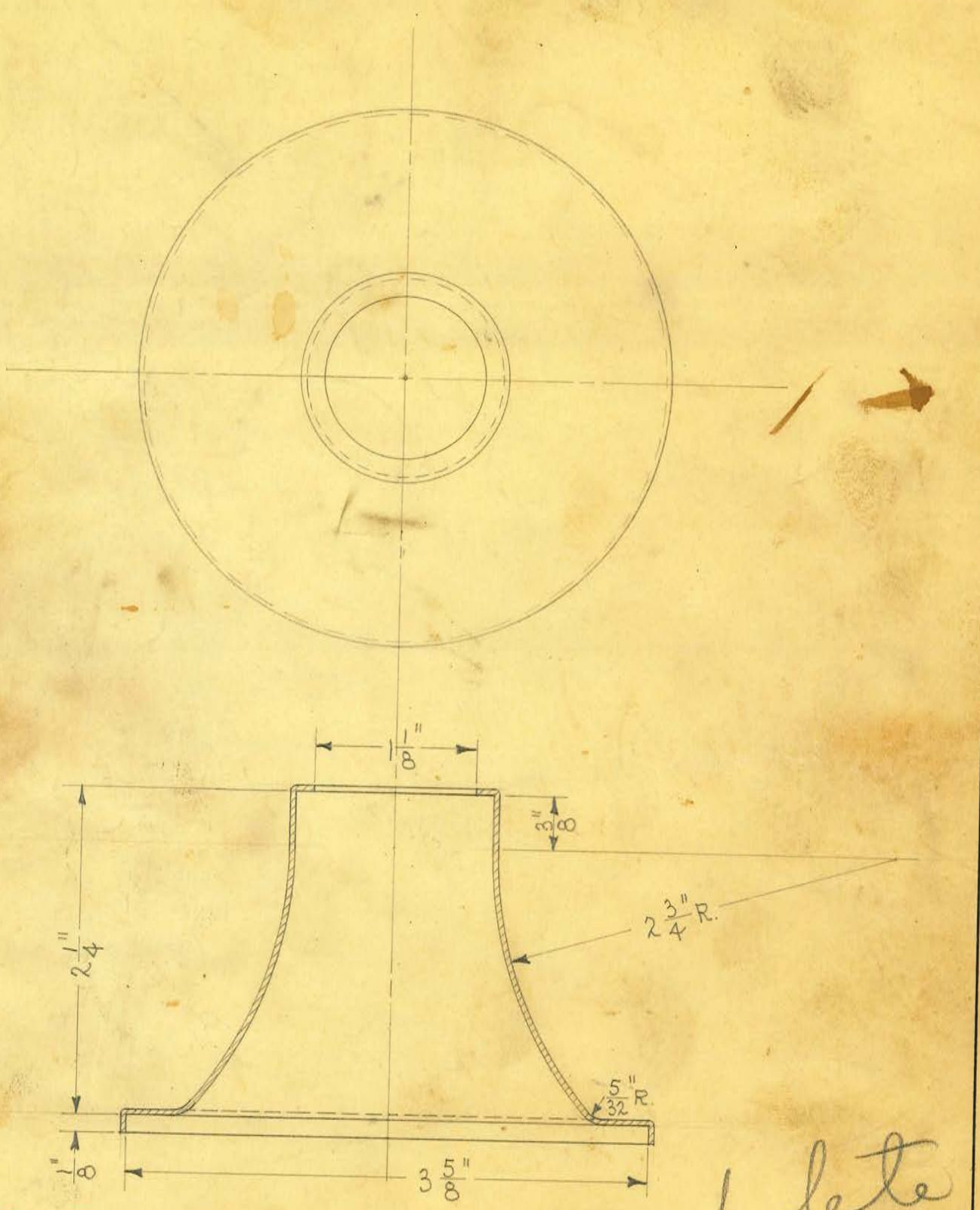


OBSOLETE

Obsolete

| | | | |
|---|---|---|---|
| SIZE | 1/32" | ISSUE 10-30-34 | 24E |
| KIND | SHEET BRASS | CHANGED | |
| SHAPE | | " | |
| FINISH | | " | |
| TEMP. | | " | |
| PATT. | | " | |

**TITLE:** PORTABLE SHOCKPROOF X-RAY TUBE HEAD H.T. CABLE INSULATOR CAP

H. G. FISCHER & CO.
2335 WABANSIA AVE.
CHICAGO, ILL

CAT. NO.

PART NO. 9329

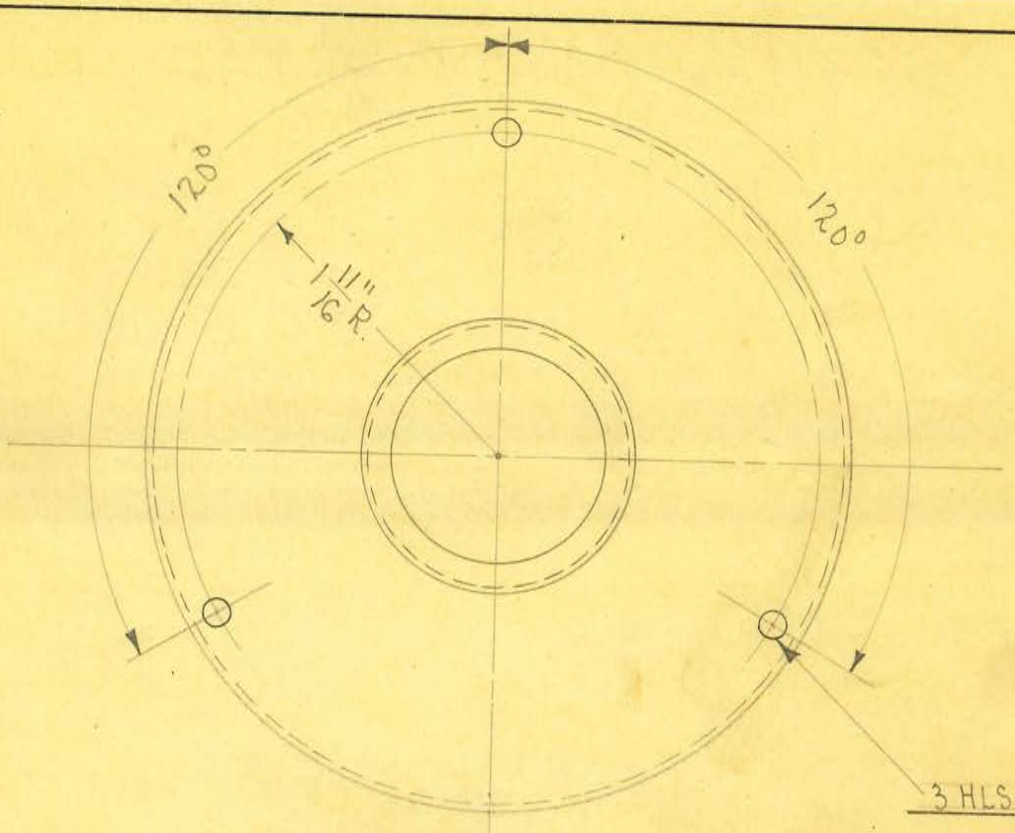


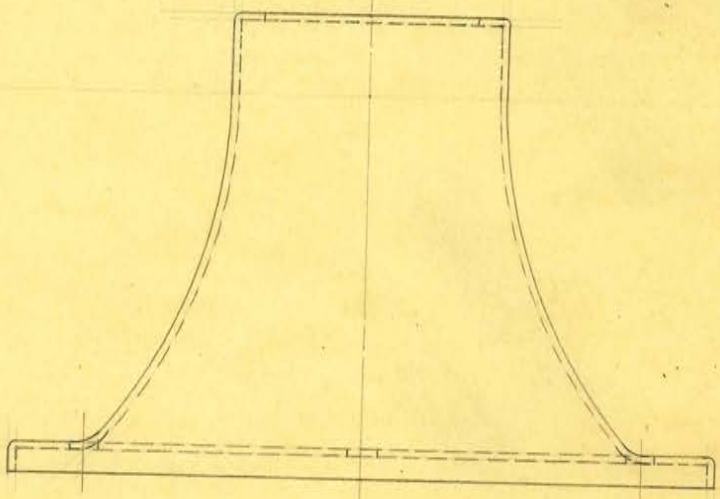

OBSOLETE

2 REQUIRED

obsolete

| | | | | |
|---|---|---|---|---|
| SIZE | | ISSUE 12-1-34 | A.E. | **TITLE:** PORTABLE SHOCKPROOF X-RAY TUBE HEAD H.T. CABLE INSULATOR CAP |
| KIND | | CHANGED | | |
| SHAPE | | " | | |
| FINISH | BLACK # 70 | " | | |
| TEMP. | | " | | |
| PATT. | | " | | |

**H. G. FISCHER & CO.**
2335 WABANSIA AVE.
CHICAGO, ILL

CAT. NO.

PART NO. 9329F

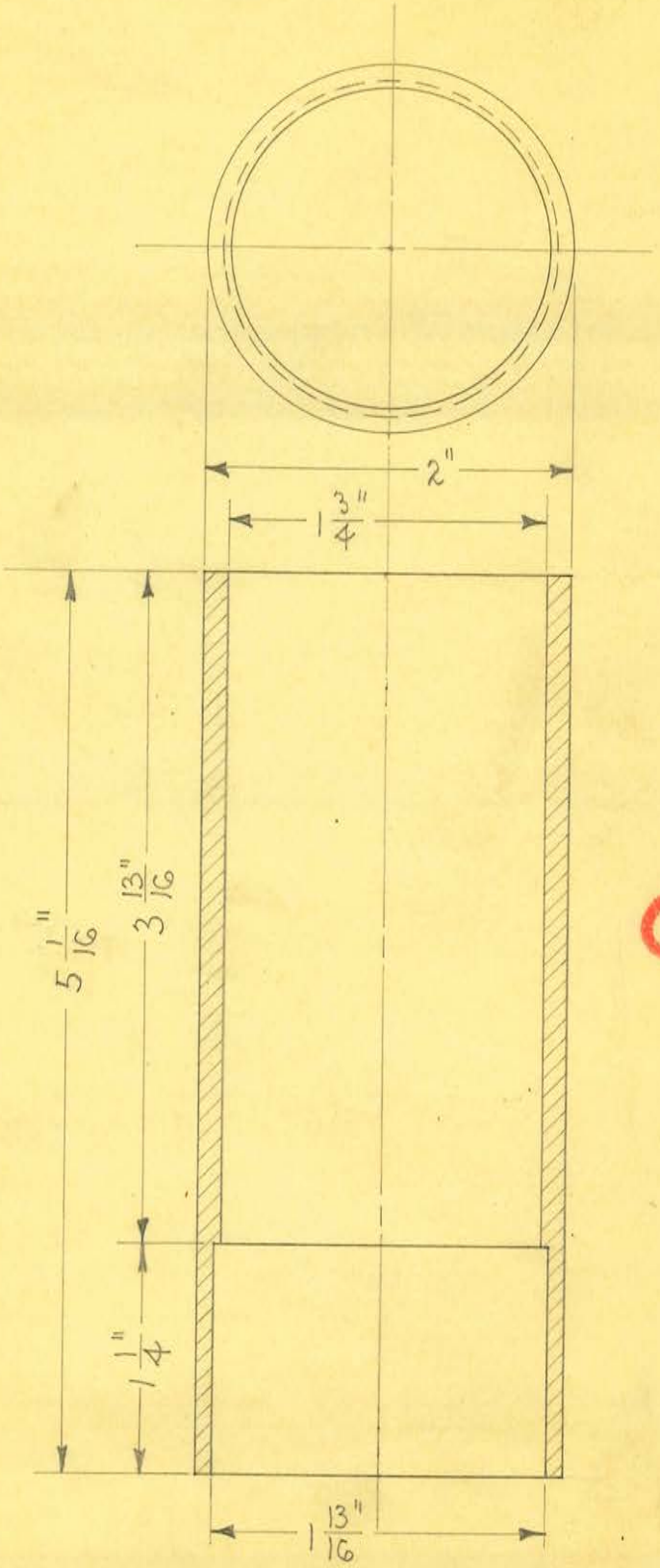


OBSOLETE

| | | | |
|---|---|---|---|
| SIZE | 2" O.D. X 1¾" I.D. | ISSUE 1-8-35 | A.E.G. |
| KIND | BAKELITE TUBING | CHANGED | |
| SHAPE | | " | |
| FINISH | | " | |
| TEMP. | | " | |
| PATT. | | " | |

**TITLE:** PORTABLE SHOCKPROOF X-RAY TRANSFORMER
HIGH TENSION CABLE INSULATOR

H. G. FISCHER & CO.
2335 WABANSIA AVE.
CHICAGO, ILL.

CAT. NO.

PART NO. 9330

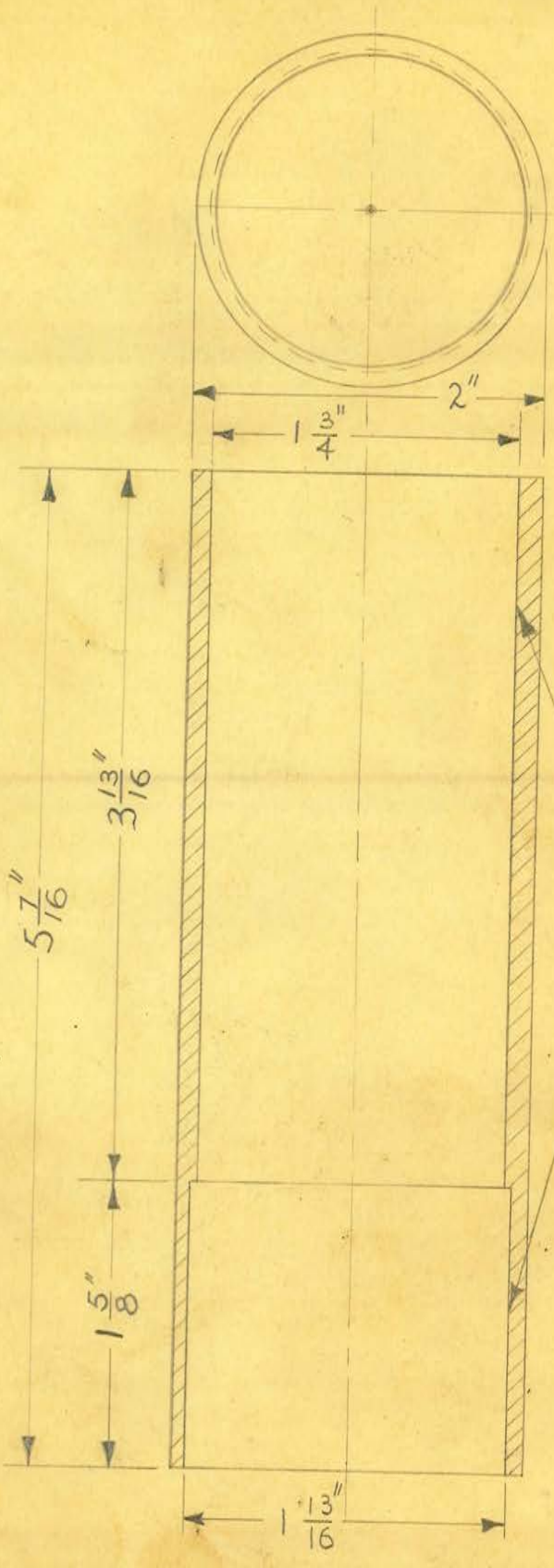


USE CORRESPONDING ENDS OF GAUGE #4836

OBSOLETE

2 REQUIRED

| | | | |
|---|---|---|---|
| SIZE | 2"O.D. X 1 3/4" I.D | ISSUE 4-29-35 | J.W. |
| KIND | BAKELITE TUBING | CHANGED | |
| SHAPE | | " | |
| FINISH | | " | |
| TEMP. | | " | |
| PATT. | | " | |

**TITLE:** PORTABLE SHOCKPROOF X-RAY TRANSFORMER
HIGH TENSION CABLE INSULATOR

H. G. FISCHER & CO.
2335 WABANSIA AVE.
CHICAGO, ILL.

CAT. NO.

PART NO. 9330A

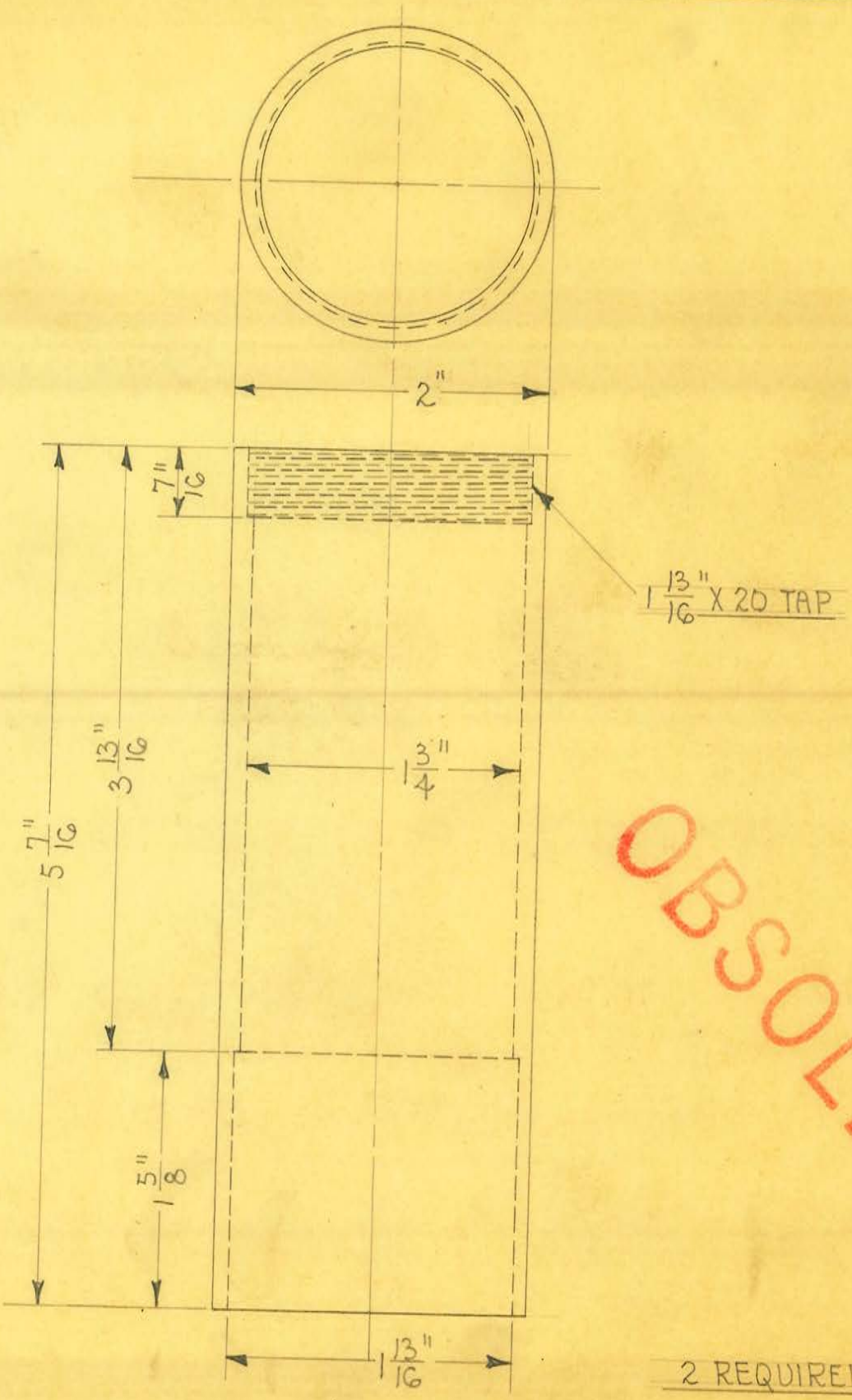


OBSOLETE

2 REQUIRED

| | | | |
|---|---|---|---|
| SIZE | 2" O.D. X 1 3/4" I.D. | ISSUE 3-10-36 | A.E. |
| KIND | BAKELITE TUBING | CHANGED | |
| SHAPE | | " | |
| FINISH | | " | |
| TEMP. | | " | |
| PATT. | | " | |

**TITLE:**

FISCHER "DSP-20" TRANSFORMER
HIGH TENSION CABLE INSULATOR (THREADED)

H. G. FISCHER & CO.
2335 WABANSIA AVE.
CHICAGO, ILL.

CAT. NO.

PART NO. 9330 1/2

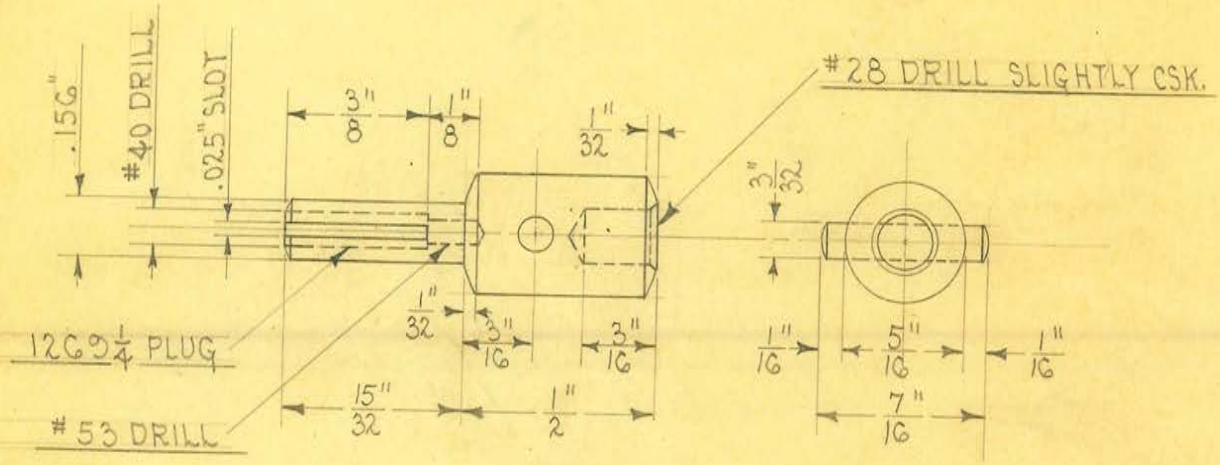


SCALE ~ 2 DIAMETERS
3 REQUIRED

OBSOLETE

| | | | | |
|---|---|---|---|---|
| SIZE | | ISSUE 12-5-34 | A.E. | **TITLE:** PORTABLE SHOCKPROOF X-RAY HIGH TENSION CABLE TIP ASSEM.- SMALL |
| KIND | BRASS ROD | CHANGED | | |
| SHAPE | | " | | |
| FINISH | CAD. #23 | " | | |
| TEMP. | | " | | |
| PATT. | | " | | |

H. G. FISCHER & CO.
2335 WABANSIA AVE.
CHICAGO, ILL

CAT. NO.

PART NO. 9331G

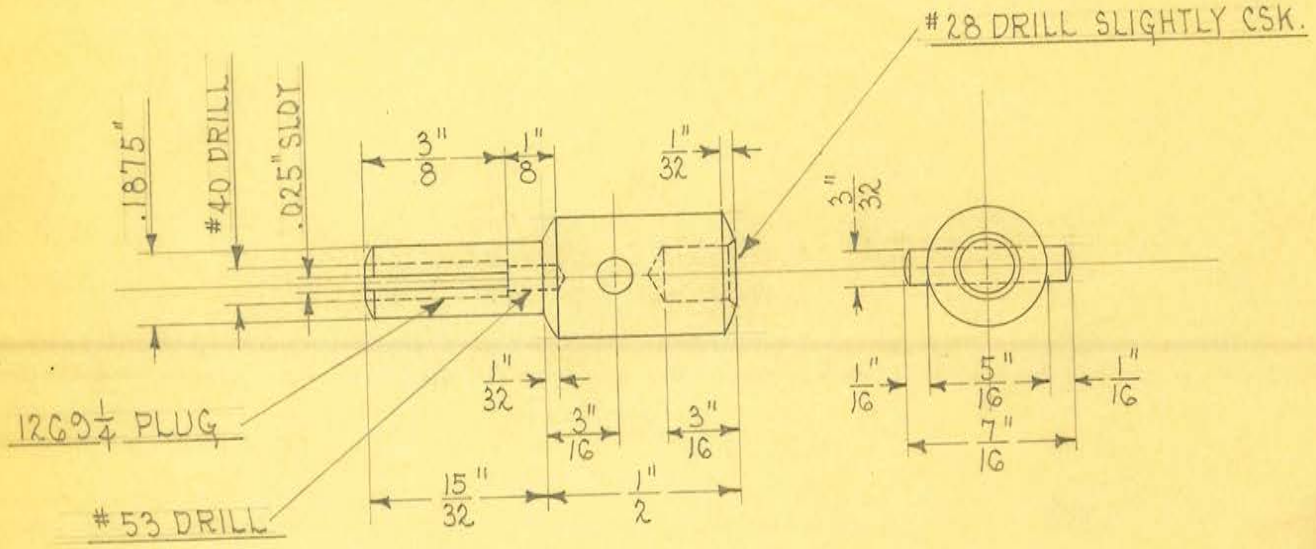


SCALE ÷ 2 DIAMETERS

1 REQUIRED

OBSOLETE

| | | | | |
|---|---|---|---|---|
| SIZE | | ISSUE 1-5-35 | A.E. | **TITLE:** PORTABLE SHOCKPROOF X-RAY HIGH TENSION CABLE TIP ASSEM. - LARGE |
| KIND | BRASS ROD | CHANGED | | |
| SHAPE | | " | | |
| FINISH | CAD. # 23 | " | | |
| TEMP. | | " | | |
| PATT. | | " | | |

H. G. FISCHER & CO.
2335 WABANSIA AVE.
CHICAGO, ILL

CAT. NO.

PART NO. 9332G

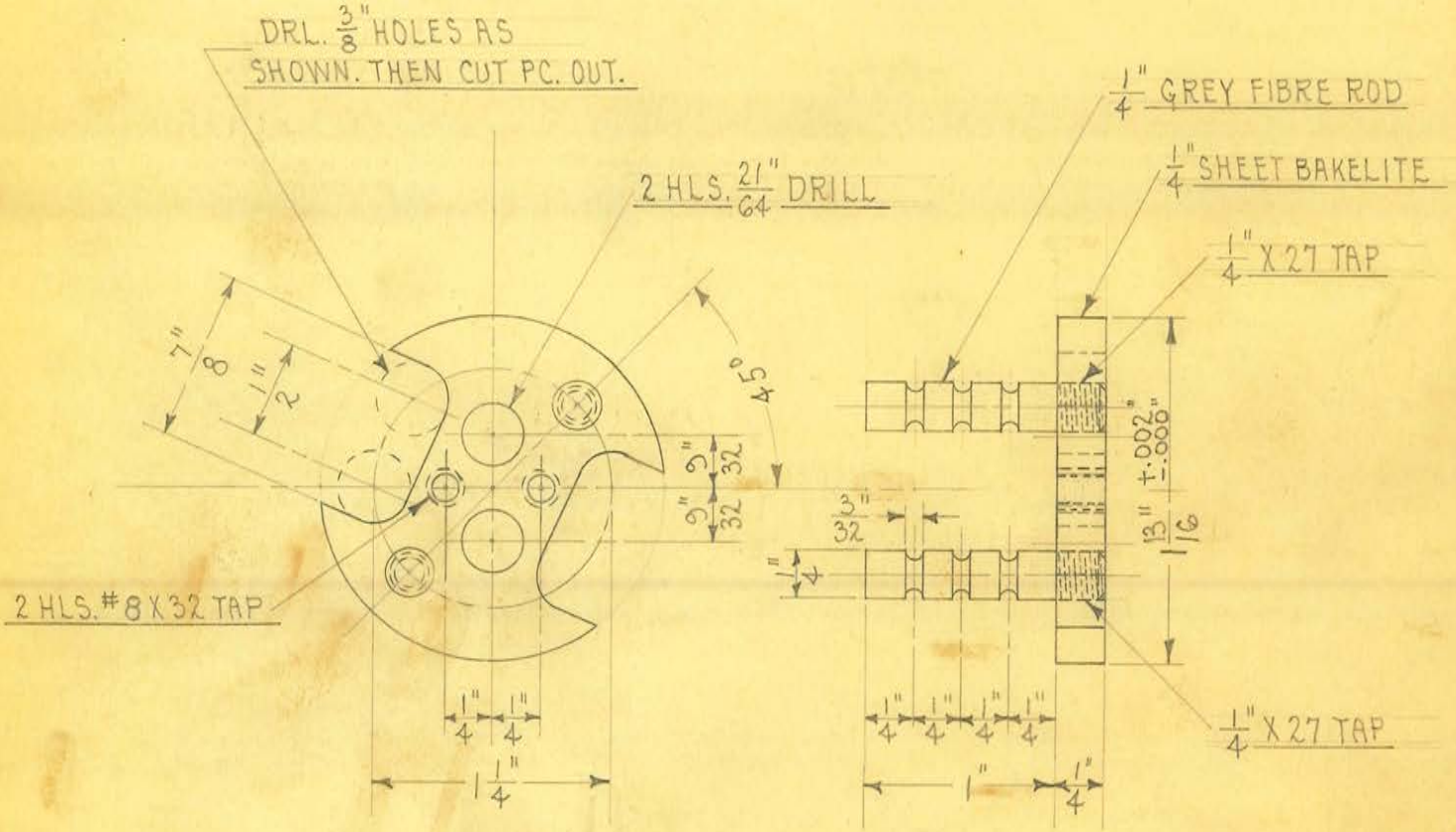


2 REQUIRED

OBSOLETE

| | | | | |
|---|---|---|---|---|
| SIZE | | ISSUE 1-9-35 | 3/8. | **TITLE:** PORTABLE SHOCKPROOF X-RAY HIGH TENSION CABLE TIP HOLDER ASSEM. |
| KIND | | CHANGED | | |
| SHAPE | | " | | |
| FINISH | | " | | |
| TEMP. | | " | | |
| PATT. | | " | | |

H. G. FISCHER & Co.
2335 WABANSIA AVE.
CHICAGO, ILL

CAT. NO.

PART NO. 9333G

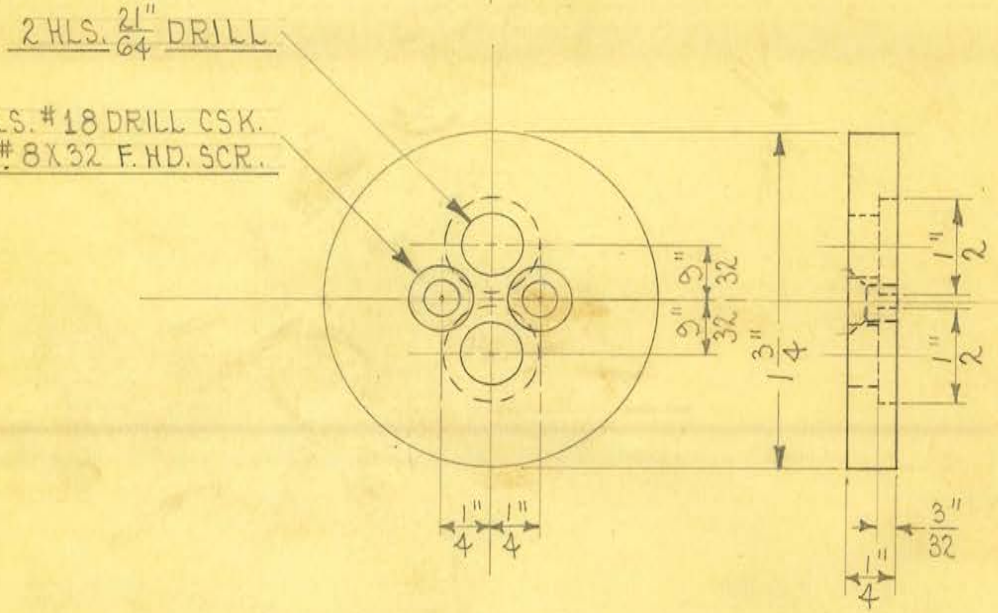


2 REQUIRED

OBSOLETE

| | | | | |
|---|---|---|---|---|
| SIZE | 1/4" SHEET | ISSUE 1-9-34 | H.E. | **TITLE:** PORTABLE SHOCKPROOF X-RAY HIGH TENSION CABLE TIP HOLDER CAP |
| KIND | BAKELITE | CHANGED | | |
| SHAPE | | " | | |
| FINISH | | " | | |
| TEMP. | | " | | |
| PATT. | | " | | |

H. G. FISCHER & CO.
2335 WABANSIA AVE.
CHICAGO, ILL

CAT. NO.

PART NO. 9334

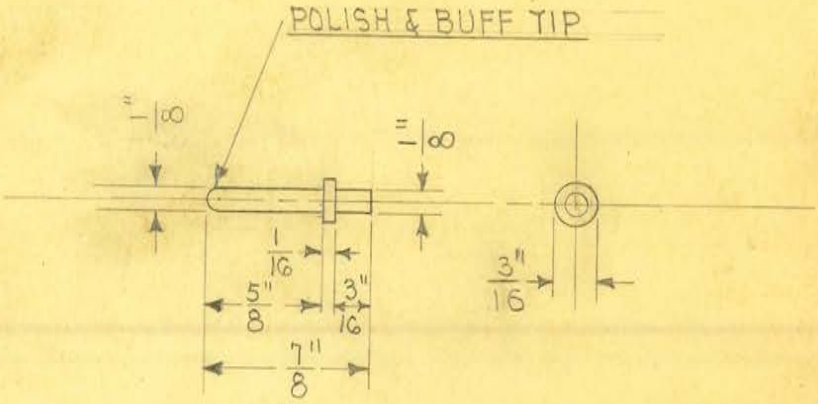


1 REQUIRED

#91 DRL

OBSOLETE

| | | | | |
|---|---|---|---|---|
| SIZE | 3/16" | ISSUE 1-7-35 | A.E. | **TITLE:** PORTABLE SHOCKPROOF X-RAY H.T. CABLE ANNODE SPG. CONNECTION TIP |
| KIND | BRASS ROD | CHANGED 7-1-35 | J.W. | |
| SHAPE | | " | | |
| FINISH | | " | | |
| TEMP. | | " | | |
| PATT. | | " | | |

H. G. FISCHER & CO.
2335 WABANSIA AVE.
CHICAGO, ILL

CAT. NO.

PART NO. 9336A

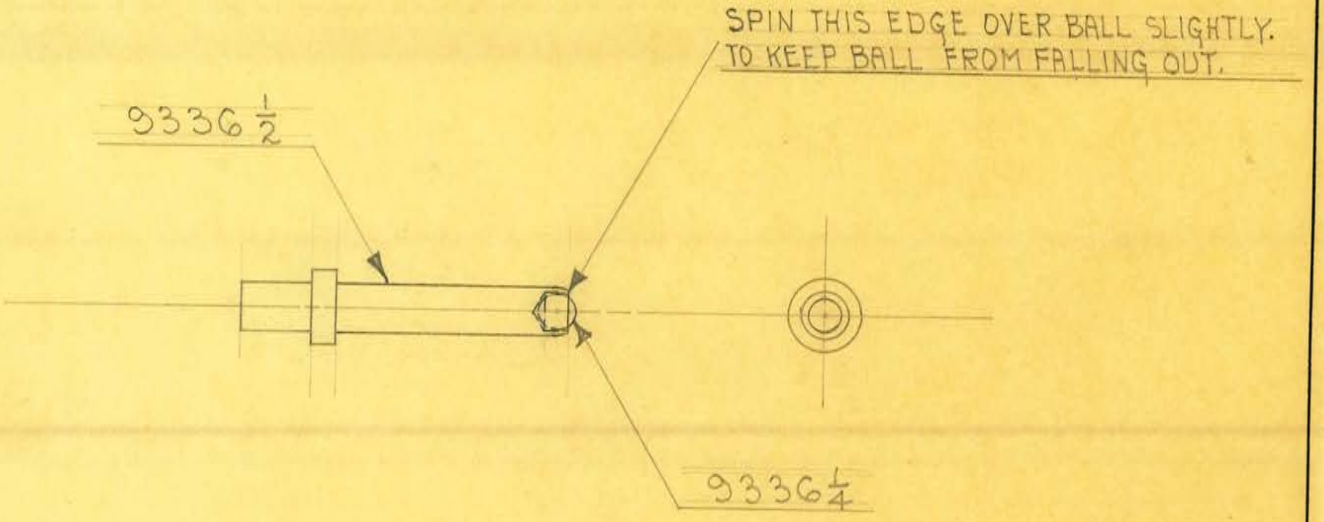


1 REQUIRED

SCALE ~ 2 DIAMETERS

OBSOLETE

| | | | | | |
|---|---|---|---|---|---|
| SIZE | | ISSUE 6-22-36 A.E. | TITLE: FISCHER "DSP-20" HIGH TENSION CABLE ANODE SPG. CONNECTION TIP ASSEM. | | |
| KIND | | CHANGED | | | |
| SHAPE | | " | | | |
| FINISH | | " | | | |
| TEMP. | | " | | | |
| PATT. | | " | H. G. FISCHER & CO. 2335 WABANSIA AVE. CHICAGO, ILL. | CAT. NO. | PART NO. 9336G |

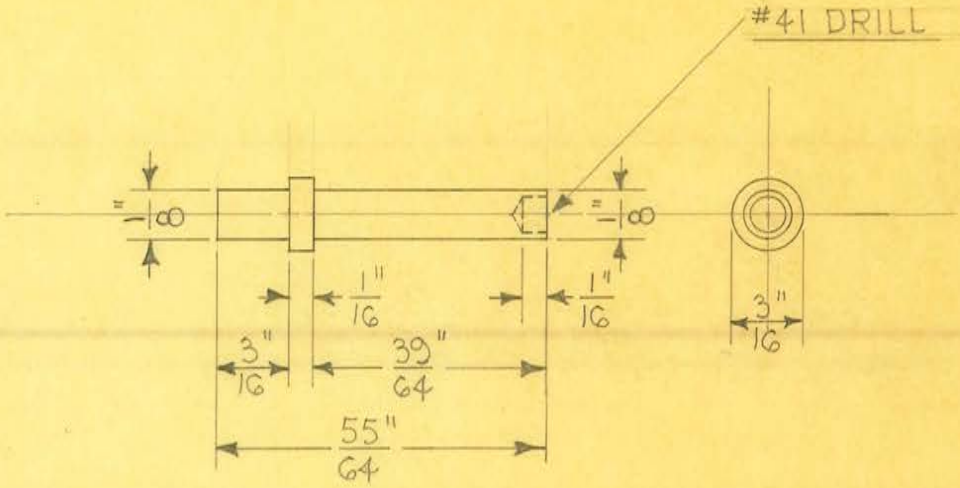


1 REQUIRED

SCALE ~ 2 DIAMETERS

OBSOLETE

| | | | |
|---|---|---|---|
| SIZE | 3/16" DIAM. | ISSUE 6-22-36 | 9/8 |
| KIND | BRASS ROD | CHANGED | |
| SHAPE | | " | |
| FINISH | | " | |
| TEMP. | | " | |
| PATT. | | " | |

**TITLE:** FISCHER "DSP-20" HIGH TENSION CABLE ANODE SPG. CONNECTION TIP

H. G. FISCHER & CO.
2335 WABANSIA AVE.
CHICAGO, ILL.

CAT. NO.

PART NO. 9336 1/2

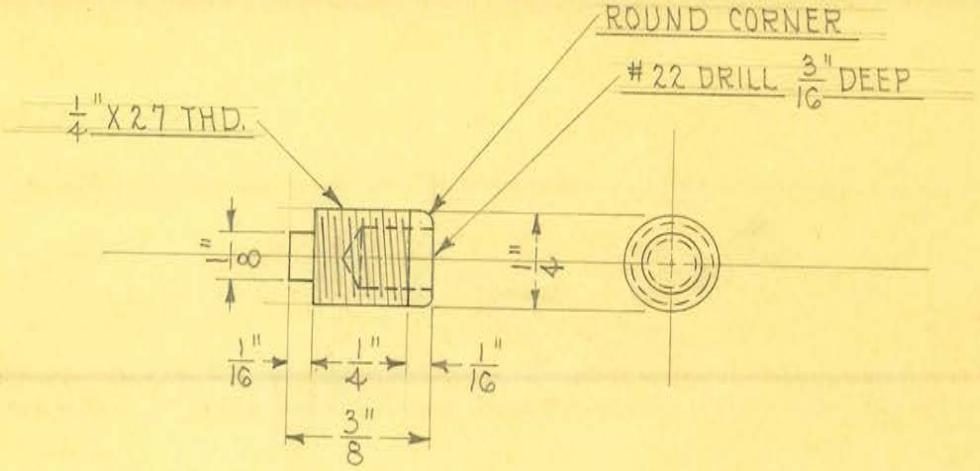


SCALE ~ 2 DIAMETERS

1 REQUIRED

OBSOLETE

| | | | | |
|---|---|---|---|---|
| SIZE | 1/4" | ISSUE 1-7-34 | A.E. | **TITLE:** PORTABLE SHOCKPROOF X-RAY H.T. CABLE ANNODE SPG. CONNECTION CONNECTOR |
| KIND | BRASS ROD | CHANGED | | |
| SHAPE | | " | | |
| FINISH | | " | | |
| TEMP. | | " | | |
| PATT. | | " | | |

H. G. FISCHER & CO.
2335 WABANSIA AVE.
CHICAGO, ILL

CAT. NO.

PART NO. 9337

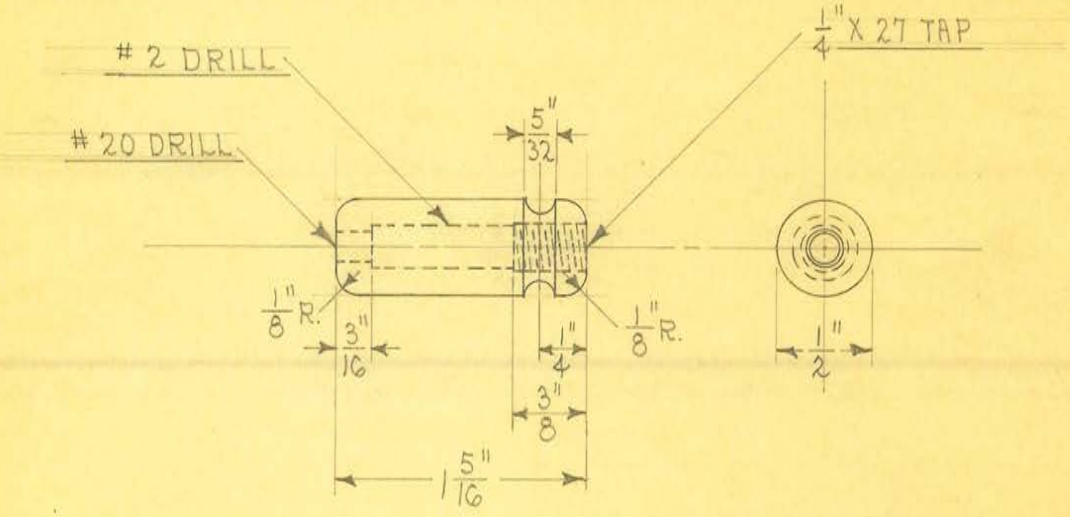


1 REQUIRED

OBSOLETE

| | | | |
|---|---|---|---|
| SIZE | 1/2" | ISSUE 1-7-35 | J.E. |
| KIND | BAKELITE ROD | CHANGED | |
| SHAPE | | " | |
| FINISH | | " | |
| TEMP. | | " | |
| PATT. | | " | |

**TITLE:** PORTABLE SHOCKPROOF X-RAY H.T. CABLE ANNODE SPG. CONNECTION INSULATOR

H. G. FISCHER & CO.
2335 WABANSIA AVE.
CHICAGO, ILL

CAT. NO.

PART NO. 9338

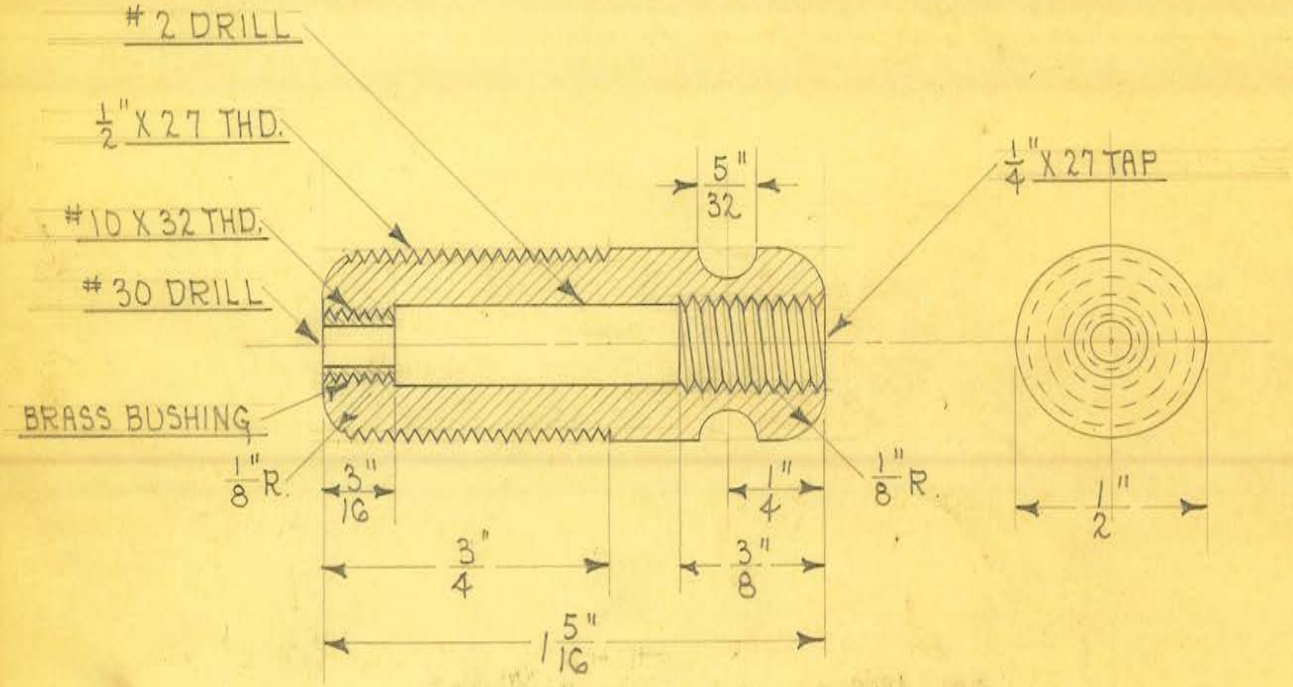


1 REQUIRED

SCALE ~ 2 DIAMETERS

OBSOLETE

| | | | |
|---|---|---|---|
| SIZE | 3/16" BRASS ROD | ISSUE 7-2-35 | A.E. |
| KIND | 1/2" BAKELITE ROD | CHANGED | |
| SHAPE | | " | |
| FINISH | | " | |
| TEMP. | | " | |
| PATT. | | " | |

**TITLE:**
FISCHER "DSP-20" HIGH TENSION CABLE
ANODE SPRING CONNECTION INSULATOR

H. G. FISCHER & CO.
2335 WABANSIA AVE.
CHICAGO. ILL.

CAT. NO.

PART NO. 9338G

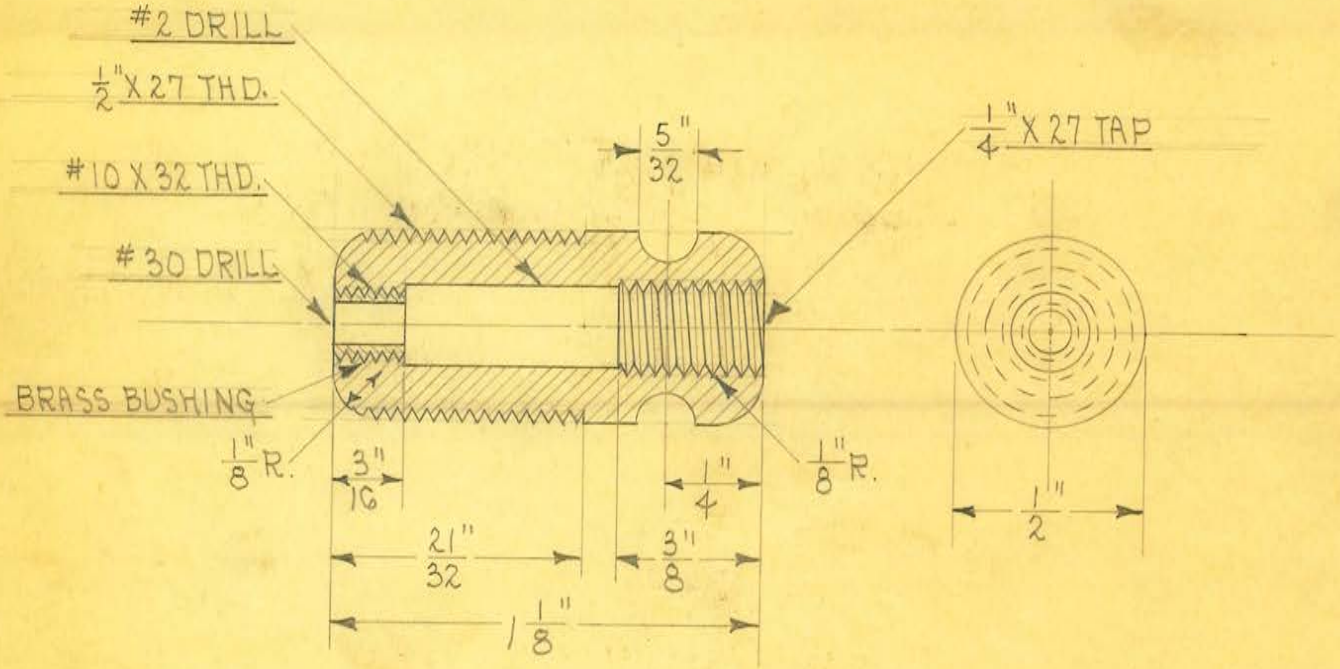


1 REQUIRED

SCALE ≈ 2 DIAMETERS

OBSOLETE

| | | | |
|---|---|---|---|
| SIZE | 3/16" BRASS ROD | ISSUE 10-22-35 | J.E. |
| KIND | 1/2" BAKELITE ROD | CHANGED | |
| SHAPE | | " | |
| FINISH | | " | |
| TEMP. | | " | |
| PATT. | | " | |

**TITLE:**

FISCHER "DSP-20" HIGH TENSION CABLE
ANODE SPRING CONNECTION INSULATOR

H. G. FISCHER & CO.
2335 WABANSIA AVE.
CHICAGO, ILL.

CAT. NO.

PART NO. 9338GA

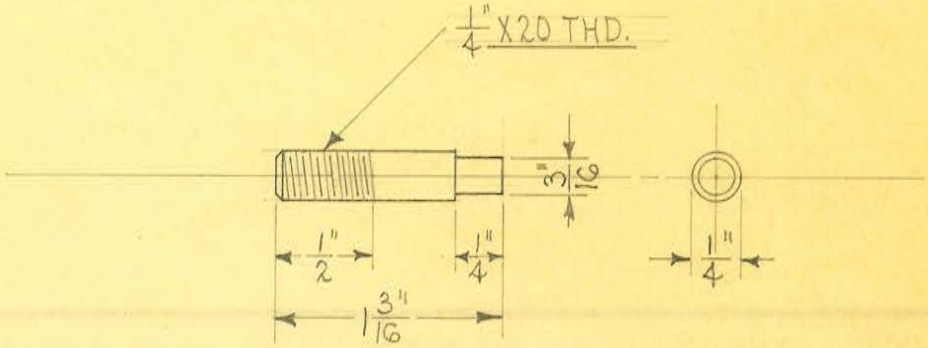


4 REQUIRED

OBSOLETE

| | | | | |
|---|---|---|---|---|
| SIZE | 1/4" | ISSUE 1-11-35 | 2-8. | **TITLE:** PORTABLE SHOCKPROOF X-RAY CABINET CLAMP STUD |
| KIND | C.R. STEEL | CHANGED | | |
| SHAPE | | " | | |
| FINISH | | " | | |
| TEMP. | | " | | |
| PATT. | | " | | |

| | | |
|---|---|---|
| H. G. FISCHER & CO. 2335 WABANSIA AVE. CHICAGO, ILL | CAT. NO. | PART NO. 9340 1/2 |

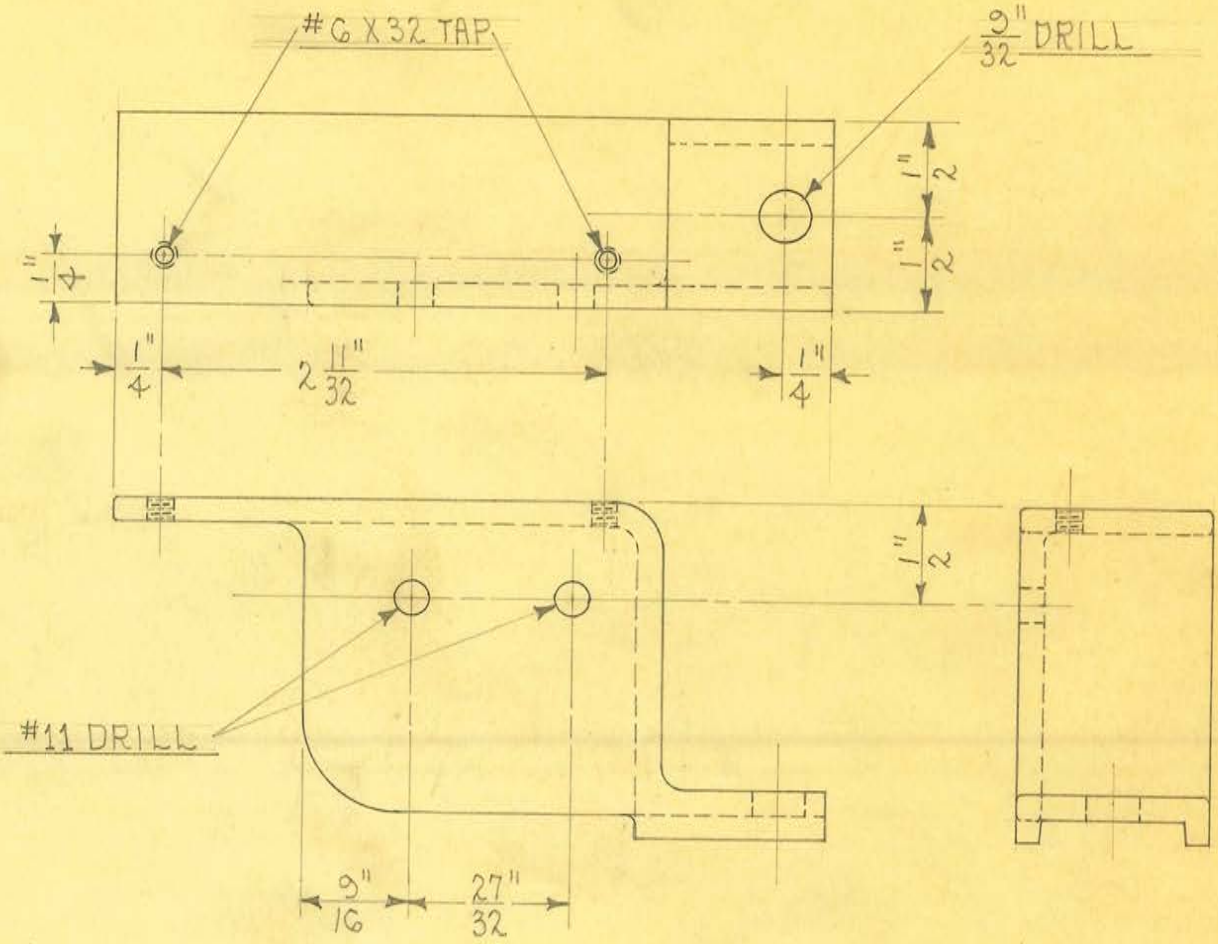


1 REQUIRED

OBSOLETE

| | | | | |
|---|---|---|---|---|
| SIZE | | ISSUE 1-30-35 | J.E. | **TITLE:** PORTABLE SHOCKPROOF X-RAY RELAY SUPPORT BRACKET |
| KIND | ALUM. CASTING | CHANGED | | |
| SHAPE | | " | | |
| FINISH | | " | | |
| TEMP. | | " | | |
| PATT. | 6447-799 | " | | |

| | | |
|---|---|---|
| H. G. FISCHER & CO. 2335 WABANSIA AVE. CHICAGO, ILL | CAT. NO. | PART NO. 934GF |

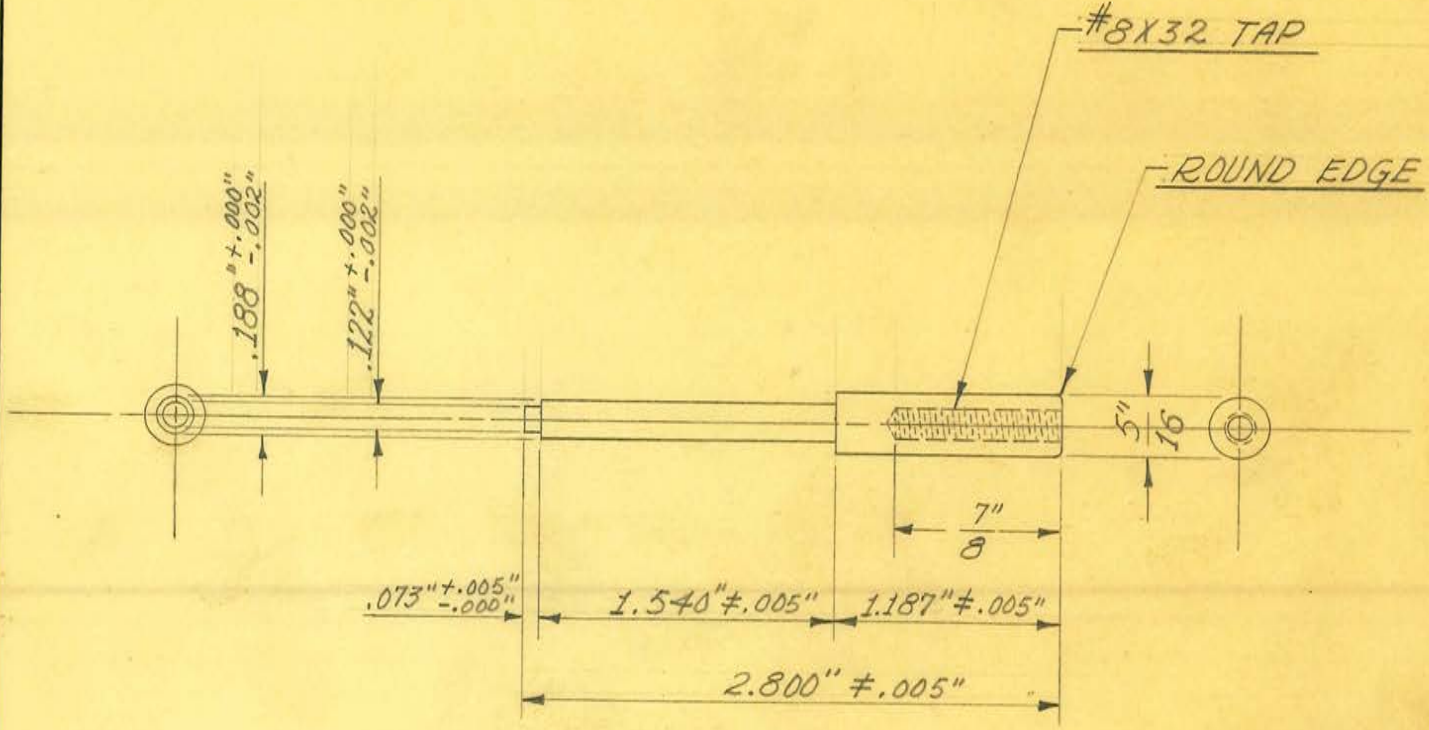


1 REQUIRED

OBSOLETE

| | | | | |
|---|---|---|---|---|
| SIZE | 5/16" DIAM. | ISSUE 3-3-39 | J.W. | TITLE: FISCHER "DSP-20" CONTROL BOX RHEOSTAT SHAFT |
| KIND | SCREW STOCK | CHANGED | | |
| SHAPE | | " | | |
| FINISH | CAD. #23 | " | | |
| TEMP. | | " | | |
| PATT. | | " | | |

H. G. FISCHER & CO.
2335 WABANSIA AVE.
CHICAGO, ILL.

CAT. NO.

PART NO. 9348

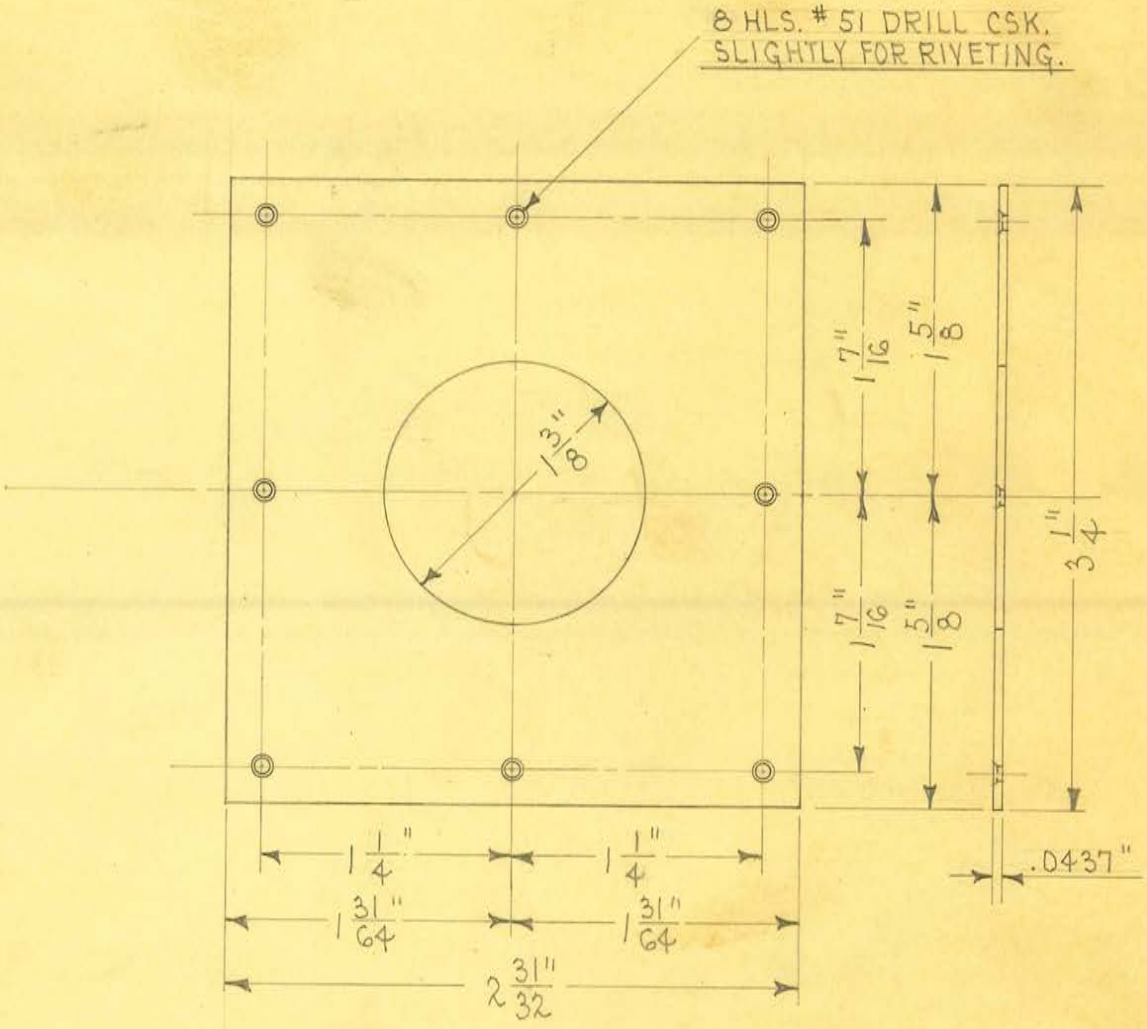


1 REQUIRED

OBSOLETE

| | | | |
|---|---|---|---|
| SIZE | #19 U.S.S. GA. | ISSUE 1-18-35 | J.E. |
| KIND | SHEET STEEL | CHANGED | |
| SHAPE | | " | |
| FINISH | | " | |
| TEMP. | | " | |
| PATT. | | " | |

**TITLE:** FISCHER "DSP-20" LEAD LINED CONE BASE PLATE

H. G. FISCHER & CO.
2335 WABANSIA AVE.
CHICAGO, ILL

CAT. NO.

PART NO. 9351

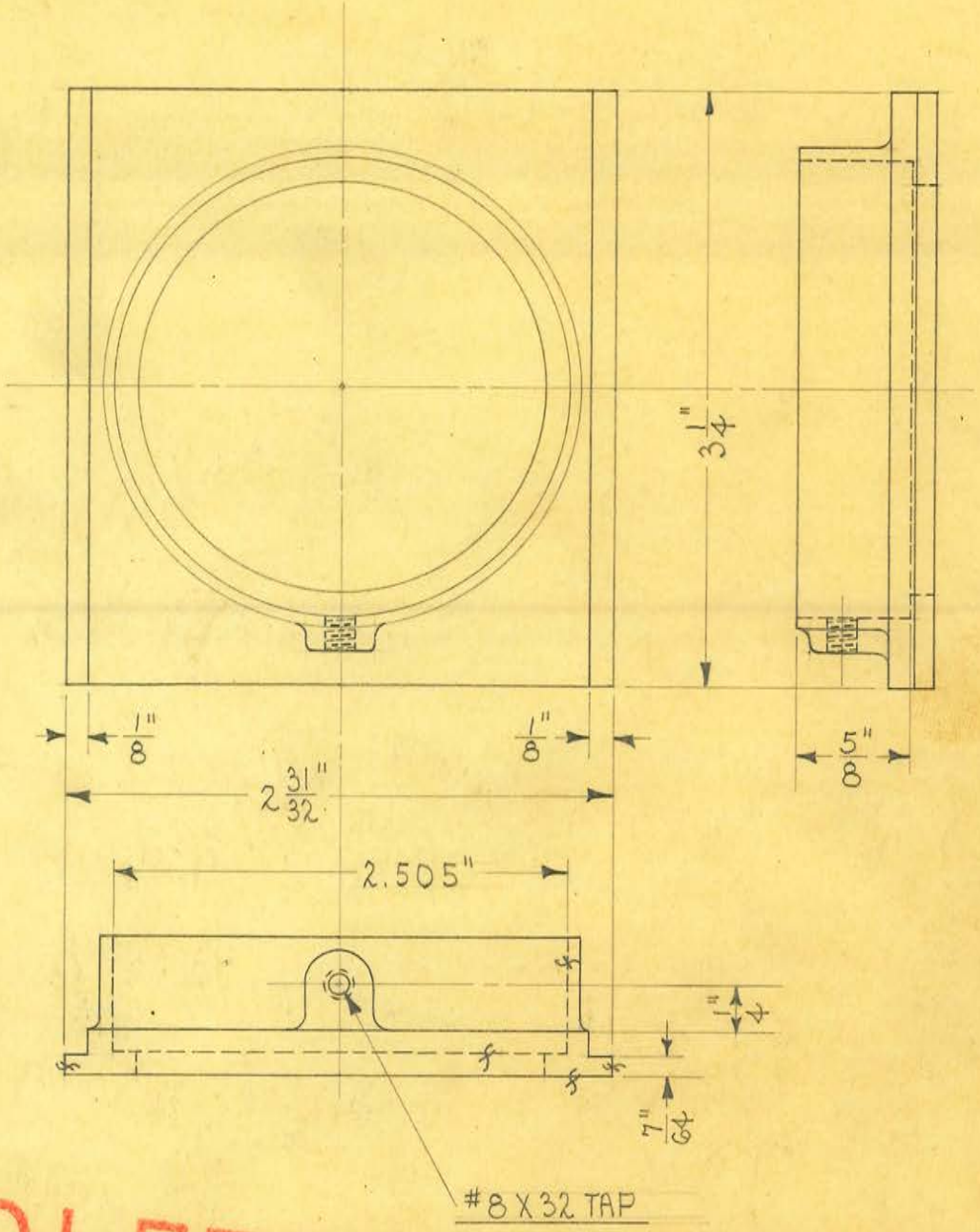


OBSOLETE

Absolete

| | | | |
|---|---|---|---|
| SIZE | | ISSUE 2-20-35 | A.E. |
| KIND | IRON CASTING | CHANGED | |
| SHAPE | | " | |
| FINISH | BLACK #50 | " | |
| TEMP. | | " | |
| PATT. | 7029-803 | " | |

**TITLE:** FISCHER "DSP-20" DENTAL CONE HOLDER

H. G. FISCHER & CO.
2335 WABANSIA AVE.
CHICAGO, ILL

CAT. NO. 3587

PART NO. 9352F

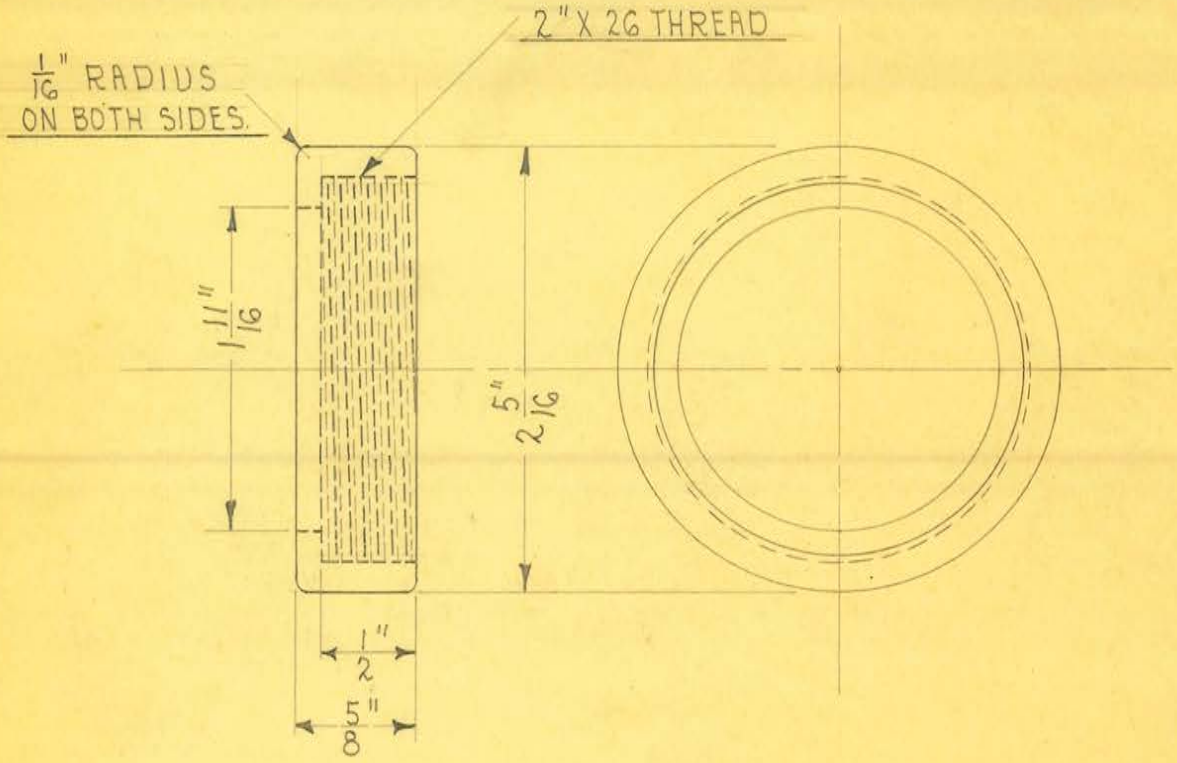


1 REQUIRED

OBSOLETE

| | | | |
|---|---|---|---|
| SIZE | | ISSUE 6-19-35 | H.E. |
| KIND | MOLDED BAKELITE | CHANGED | |
| SHAPE | | " | |
| FINISH | | " | |
| TEMP. | | " | |
| PATT. | | " | |

**TITLE:** SHOCKPROOF DENTAL "X" HIGH TENSION CABLE INSULATOR COVER CAP

H. G. FISCHER & CO.
2335 WABANSIA AVE.
CHICAGO, ILL.

CAT. NO.

PART NO. 9356

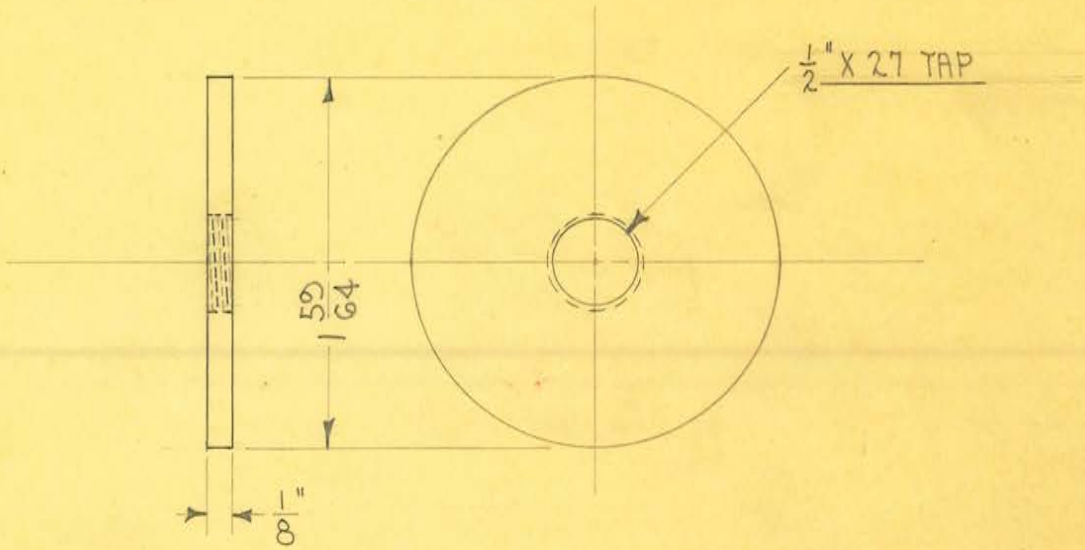


1 REQUIRED

OBSOLETE

| | | | |
|---|---|---|---|
| SIZE | 1/8" SHEET | ISSUE 6-19-35 | A.E. |
| KIND | FABRIC BASE | CHANGED | |
| SHAPE | BAKELITE | " | |
| FINISH | | " | |
| TEMP. | | " | |
| PATT. | | " | |

**TITLE:** SHOCKPROOF DENTAL "X" HIGH TENSION CABLE INSULATOR COVER

H. G. FISCHER & CO.
2335 WABANSIA AVE.
CHICAGO, ILL.

CAT. NO.

PART NO. 9357

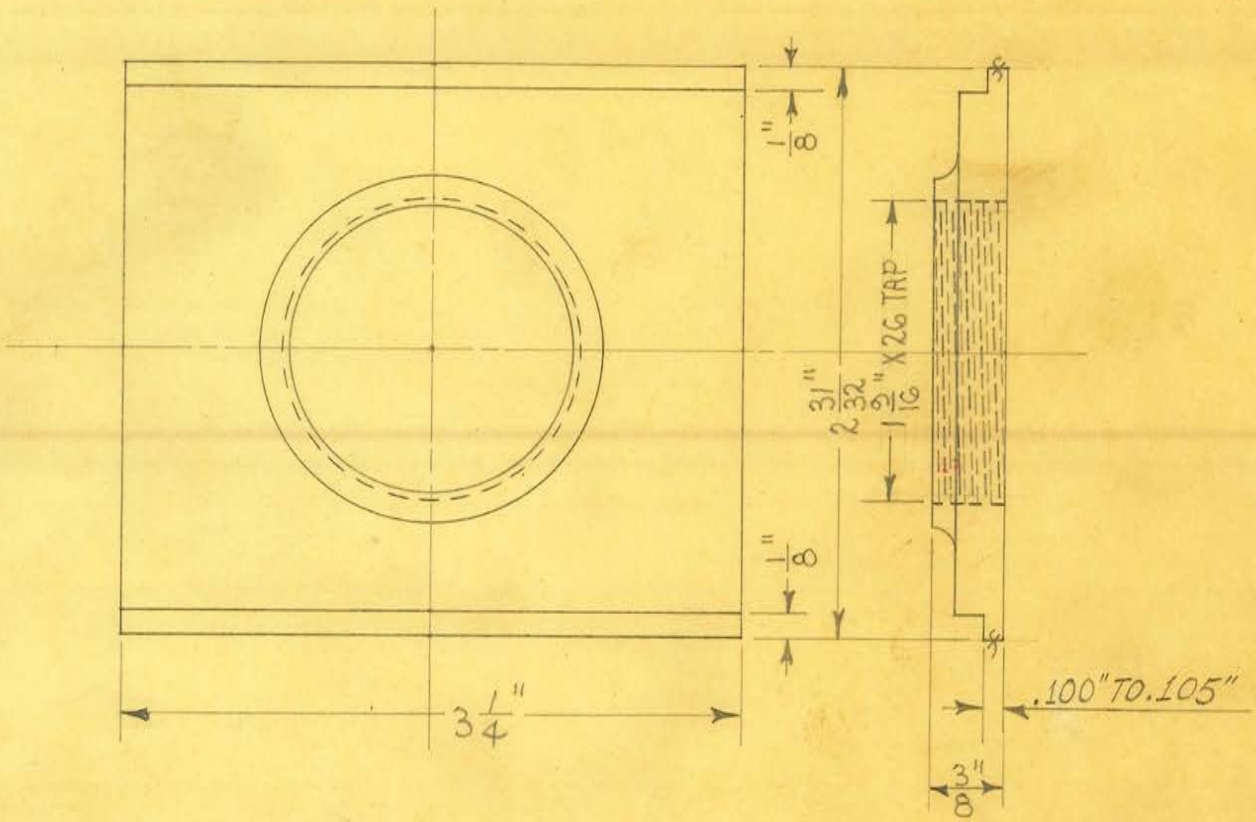


OBSOLETE

| | | | |
|---|---|---|---|
| SIZE | | ISSUE 1-31-36 | H.E. |
| KIND | IRON CASTING | CHANGED | |
| SHAPE | | " | |
| FINISH | BLACK #50 | " | |
| TEMP. | | " | |
| PATT. | 5830-932 | " | |

**TITLE:** FISCHER "DSP-20" DENTAL CONE HOLDER BASE

H. G. FISCHER & CO.
2335 WABANSIA AVE.
CHICAGO, ILL.

CAT. NO. 3926

PART NO. 9360F

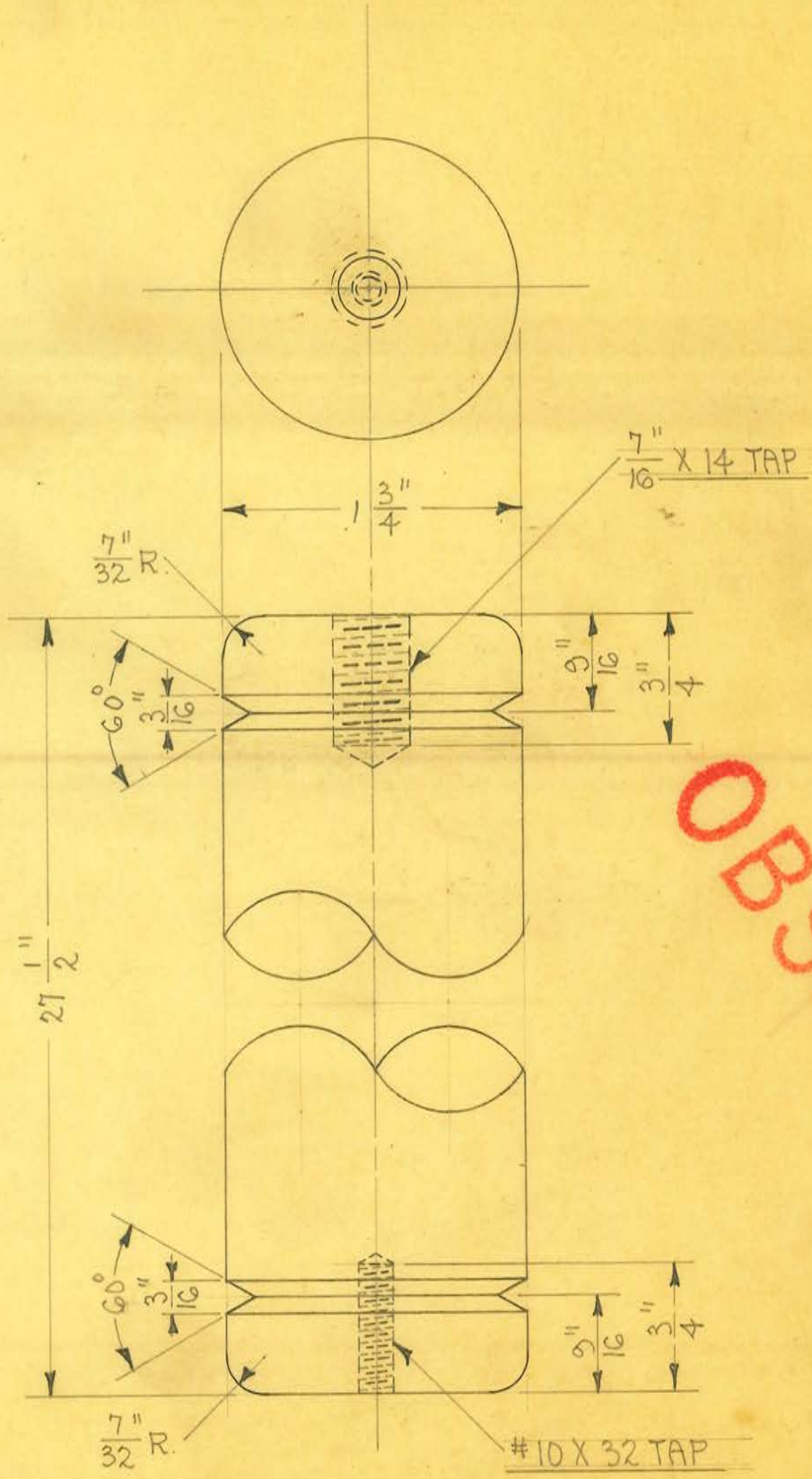


OBSOLETE

1 REQUIRED

| | | | |
|---|---|---|---|
| SIZE | 1 3/4" DIAM. | ISSUE 3-9-36 | H.E.G. |
| KIND | C.R. STEEL | CHANGED | |
| SHAPE | | " | |
| FINISH | | " | |
| TEMP. | | " | |
| PATT. | | " | |

**TITLE:** FISCHER "DSP-2D" COUNTERWEIGHT (FINISHED)

H. G. FISCHER & CO.
2335 WABANSIA AVE.
CHICAGO, ILL.

CAT. NO.

PART NO. 9362F

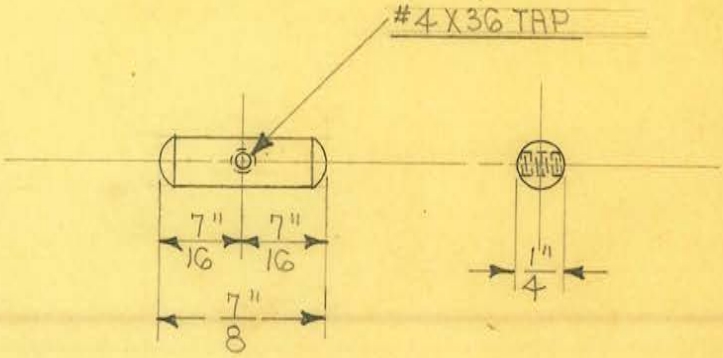


1 REQUIRED

OBSOLETE

| | | | |
|---|---|---|---|
| SIZE | 1/4" DIAM. | ISSUE 3-7-36 | A.E. |
| KIND | C.R. STEEL | CHANGED | |
| SHAPE | | " | |
| FINISH | | " | |
| TEMP. | | " | |
| PATT. | | " | |

**TITLE:** FISCHER "DSP-20" COUNTERWEIGHT CHAIN STOP

H. G. FISCHER & CO.
2335 WABANSIA AVE.
CHICAGO, ILL.

CAT. NO.

PART NO. 9364

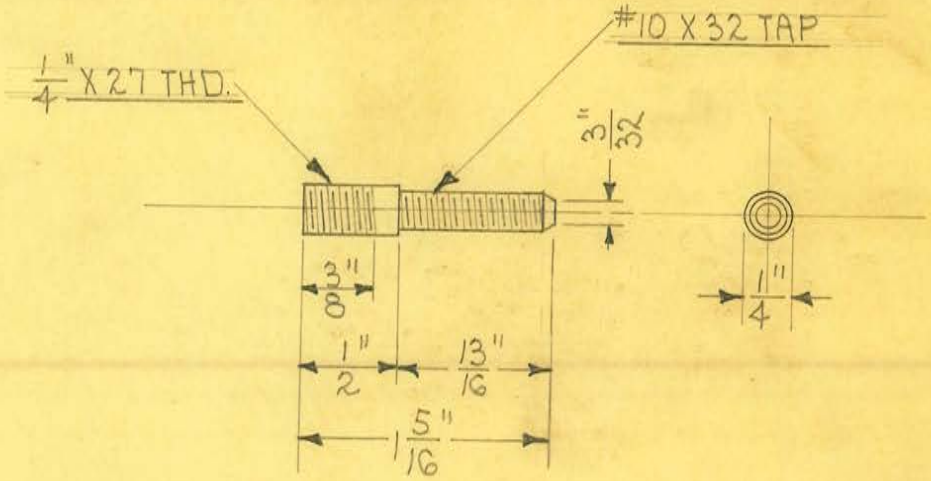


1 REQUIRED

OBSOLETE

| | | | |
|---|---|---|---|
| SIZE | 1/4" DIAM. | ISSUE 3-9-36 | A.E. |
| KIND | C.R. STEEL | CHANGED | |
| SHAPE | | " | |
| FINISH | | " | |
| TEMP. | | " | |
| PATT. | | " | |

**TITLE:** FISCHER "DSP-20" SLIDE CLAMP STUD

H. G. FISCHER & CO.
2335 WABANSIA AVE.
CHICAGO, ILL.

CAT. NO.

PART NO. 9366

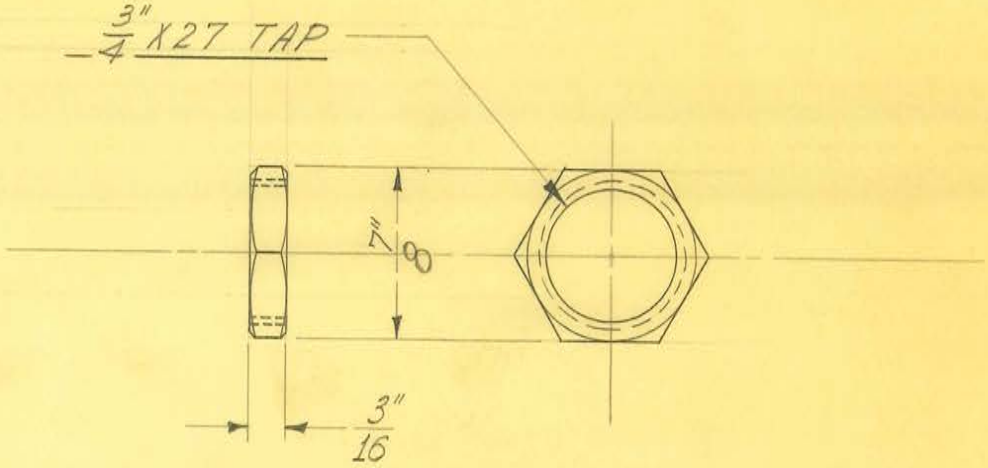


1 REQUIRED

OBSOLETE

| | | | | |
|---|---|---|---|---|
| SIZE | 7/8" HEX. | ISSUE 1-5-38 | J.W. | TITLE: FISCHER "DSP-20" LINE CORD BUSHING CLAMP NUT |
| KIND | BRASS ROD. | CHANGED | | |
| SHAPE | | " | | |
| FINISH | | " | | |
| TEMP. | | " | | |
| PATT. | | " | | |

H. G. FISCHER & CO.
2335 WABANSIA AVE.
CHICAGO, ILL.

CAT. NO.

PART NO. 9369

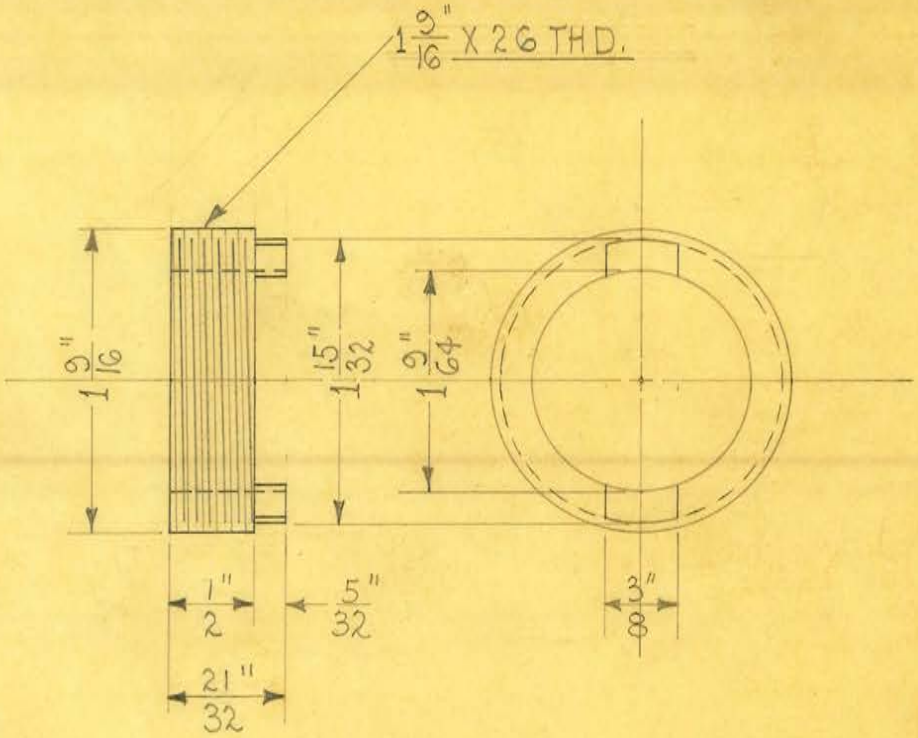


2 REQUIRED

OBSOLETE

| | | | |
|---|---|---|---|
| SIZE | 1 9/16" | ISSUE 7-9-36 | A.E. |
| KIND | BRASS ROD | CHANGED | |
| SHAPE | | " | |
| FINISH | | " | |
| TEMP. | | " | |
| PATT. | | " | |

**TITLE:** FISCHER "DSP-20" ANODE & CATHODE CONN. ADJUSTING SLEEVE

H. G. FISCHER & CO.
2335 WABANSIA AVE.
CHICAGO, ILL.

CAT. NO.

PART NO. 9370

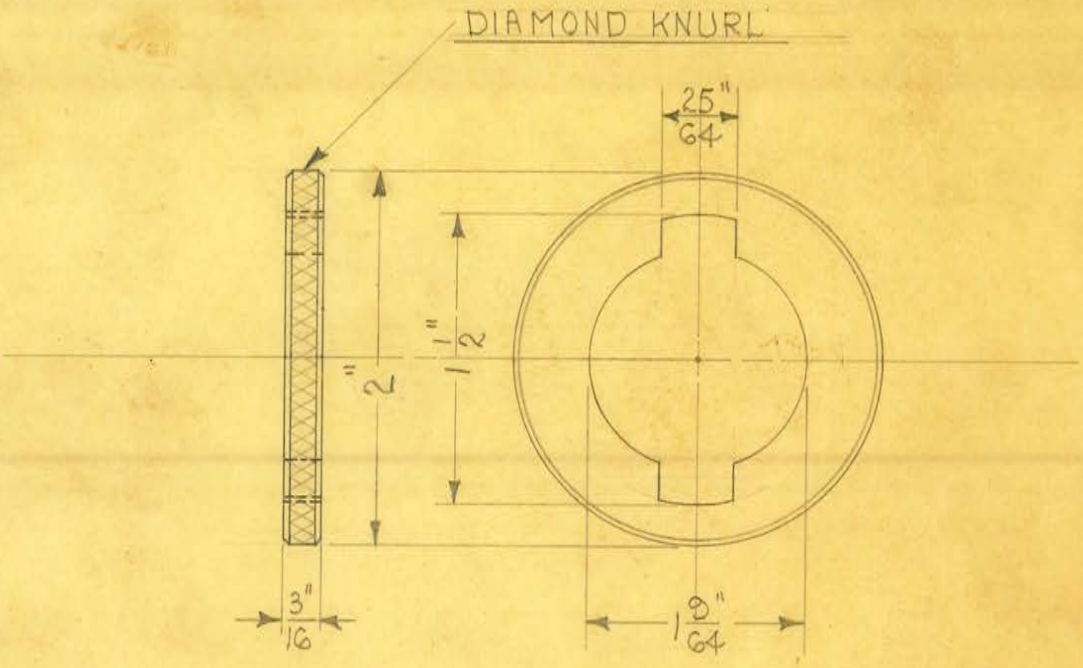


2 REQUIRED

OBSOLETE

| | | | |
|---|---|---|---|
| SIZE | 3/16" | ISSUE 7-9-36 | A.E. |
| KIND | SHEET ALUM. | CHANGED | |
| SHAPE | | " | |
| FINISH | POL. & BUFF | " | |
| TEMP. | | " | |
| PATT. | | " | |

**TITLE:** FISCHER "DSP-20" ANODE & CATHODE CONN. ADJUSTING SLEEVE COLLAR

H. G. FISCHER & CO.
2335 WABANSIA AVE.
CHICAGO, ILL.

CAT. NO.

PART NO. 9371

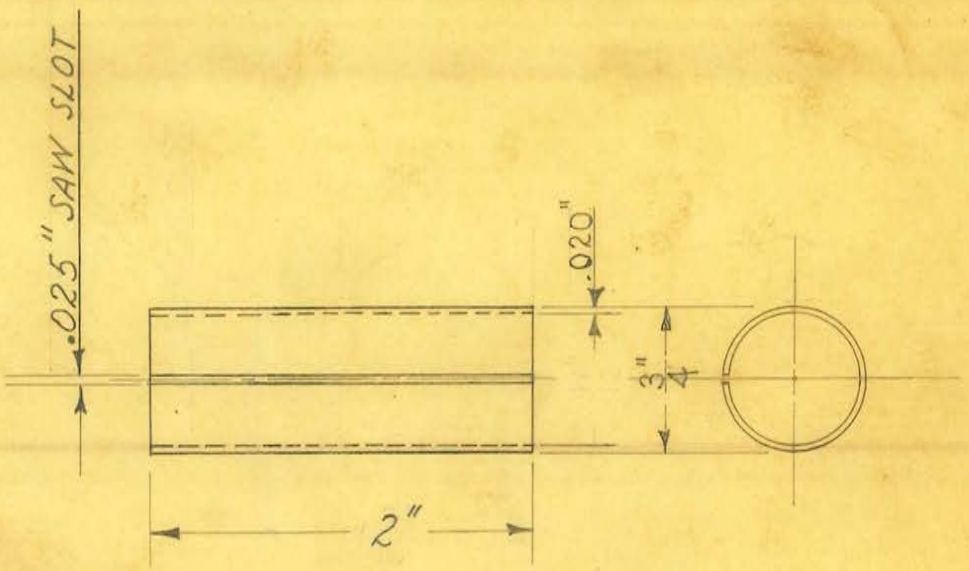


4 REQUIRED

OBSOLETE

| | | | |
|---|---|---|---|
| SIZE | 3/4" O.D. X .020" WALL | ISSUE 8-4-36 | A.E. |
| KIND | BRASS TUBING | CHANGED 5-7-37 | J.W. |
| SHAPE | | " | |
| FINISH | | " | |
| TEMP. | | " | |
| PATT. | | " | |

**TITLE:** FISCHER "DSP-20" H.T. CABLE GROUND CONNECTION SLEEVE - TUBE HEAD END

| | | |
|---|---|---|
| H. G. FISCHER & CO. 2335 WABANSIA AVE. CHICAGO, ILL. | CAT. NO. | PART NO. 9372A |

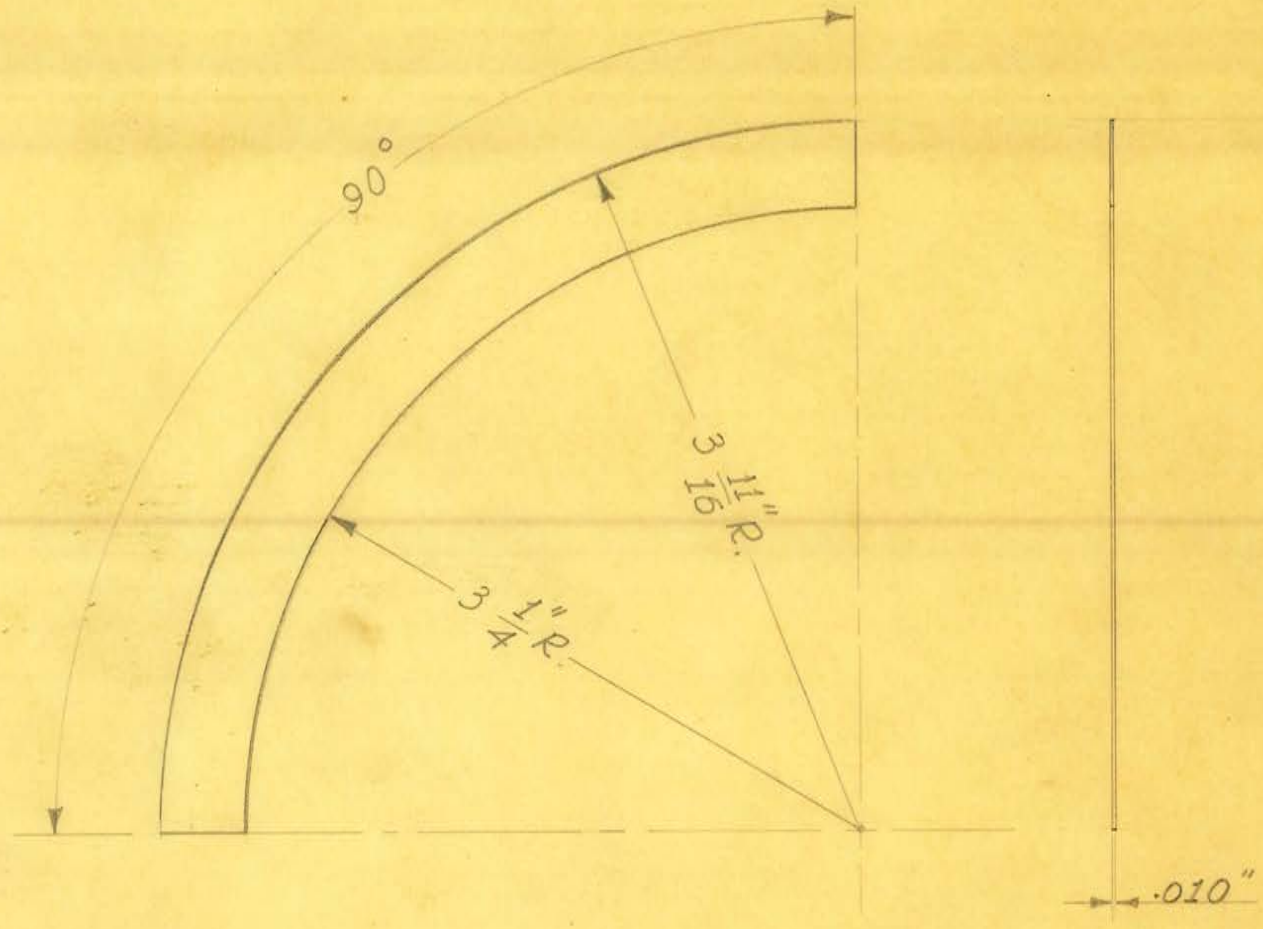


2 REQUIRED

OBSOLETE

| | | | |
|---|---|---|---|
| SIZE | .012" SHEET | ISSUE 8-10-36 | J.W. |
| KIND | LEAD | CHANGED | |
| SHAPE | | " | |
| FINISH | | " | |
| TEMP. | | " | |
| PATT. | | " | |

**TITLE:** FISCHER "DSP-20" H.T. CABLE STRESS CONE RELIEF STRIP - BOTTOM

| | | |
|---|---|---|
| H. G. FISCHER & CO. 2335 WABANSIA AVE. CHICAGO, ILL. | CAT. NO. | PART NO. 9373 |

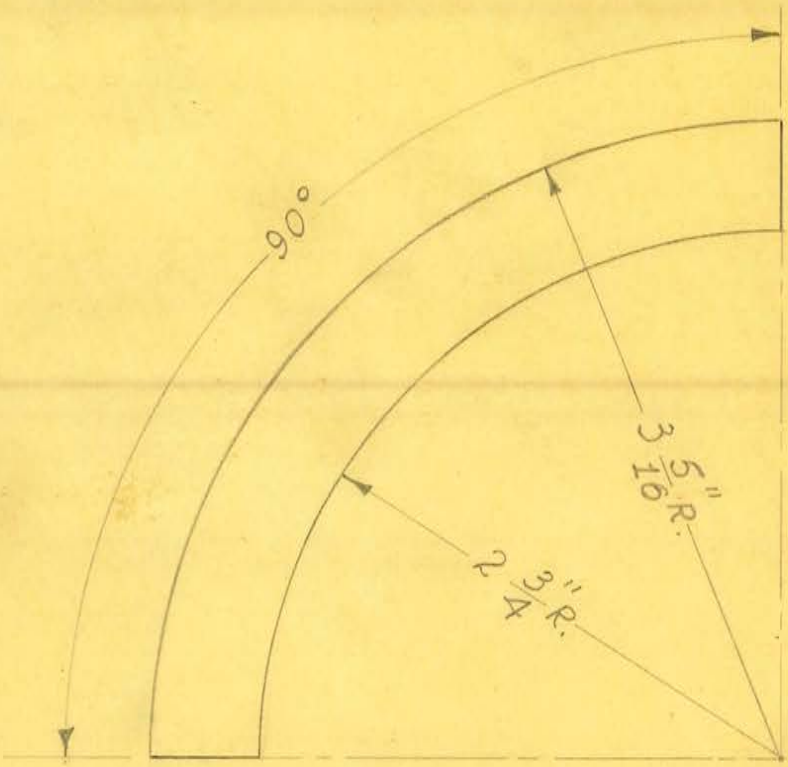

2 REQUIRED

OBSOLETE

| | | | |
|---|---|---|---|
| SIZE | .012" SHEET | ISSUE 8-10-36 | J.W. |
| KIND | LEAD | CHANGED | |
| SHAPE | | " | |
| FINISH | | " | |
| TEMP. | | " | |
| PATT. | | " | |

**TITLE:** FISCHER "DSP-20" H.T. CABLE STRESS CONE RELIEF STRIP - TOP

H. G. FISCHER & CO.
2335 WABANSIA AVE.
CHICAGO, ILL.

CAT. NO.

PART NO. 9374

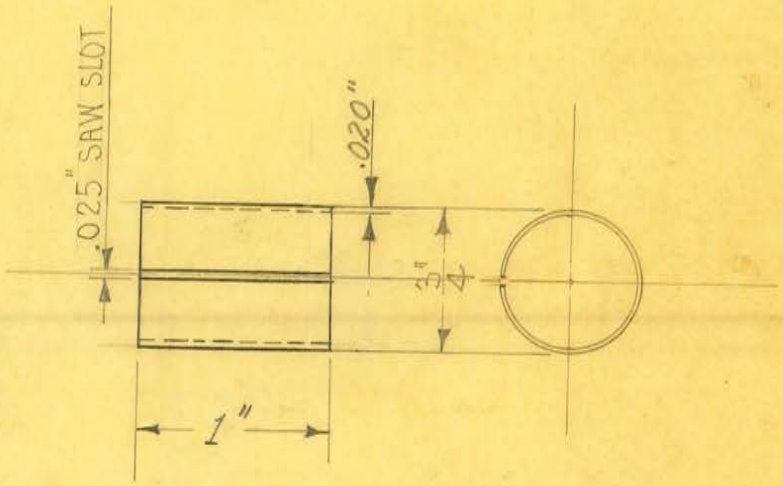


2 REQUIRED

OBSOLETE

| | | | |
|---|---|---|---|
| SIZE | 3/4" O.D. X .020" WALL | ISSUE 8-26-36 | J.W. |
| KIND | BRASS TUBING | CHANGED 11-17-36 | J.W. |
| SHAPE | | " 5-7-37 | J.W. |
| FINISH | | " | |
| TEMP. | | " | |
| PATT. | | " | |

**TITLE:** FISCHER "DSP-20" H.T. CABLE GROUND CONNECTION SLEEVE - TRANSF. END

H. G. FISCHER & CO.
2335 WABANSIA AVE.
CHICAGO, ILL.

CAT. NO.

PART NO. 9376A

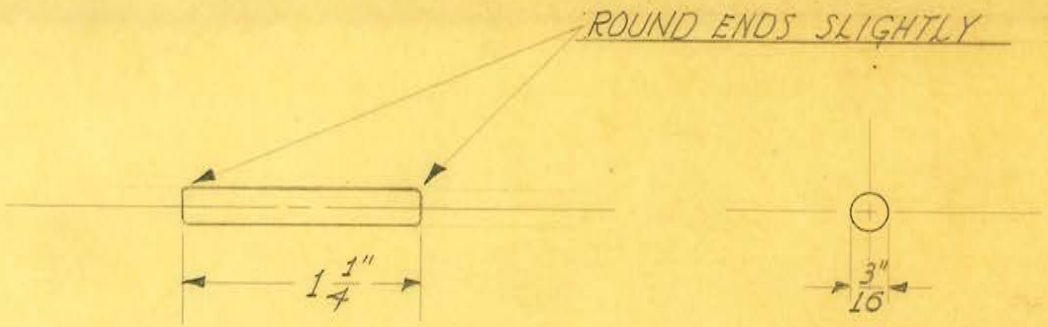


1 REQUIRED

OBSOLETE

| | | | | |
|---|---|---|---|---|
| SIZE | 3/16" C.R. | ISSUE 9-1-36 | J.W. | TITLE: FISCHER "DSP-20" CWT. CHAIN SCREW LUG PIN |
| KIND | STEEL ROD | CHANGED | | |
| SHAPE | | " | | |
| FINISH | | " | | |
| TEMP. | | " | | |
| PATT. | | " | | |

H. G. FISCHER & CO.
2335 WABANSIA AVE.
CHICAGO, ILL.

CAT. NO.

PART NO. 9377

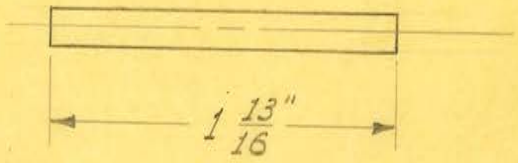


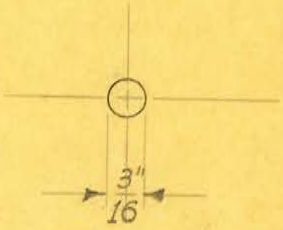


2 REQUIRED

OBSOLETE

| | | | | |
|---|---|---|---|---|
| SIZE | 3/16" C.R. | ISSUE 9-1-36 | J.W. | TITLE: FISCHER "DSP-20" C.W.T. TUBE PIN |
| KIND | STEEL ROD | CHANGED | | |
| SHAPE | | " | | |
| FINISH | | " | | |
| TEMP. | | " | | |
| PATT. | | " | | |

H. G. FISCHER & CO.
2338 WABANSIA AVE.
CHICAGO, ILL.

CAT. NO.

PART NO. 9378

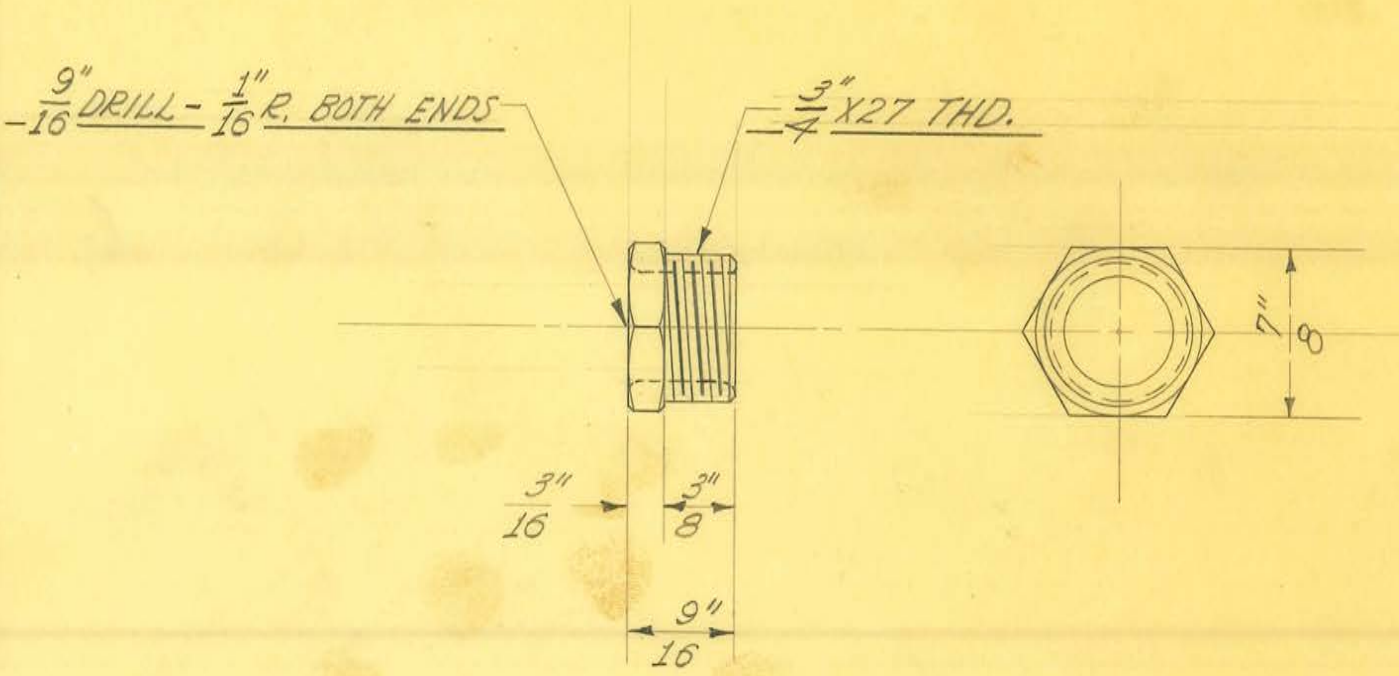


1 REQUIRED

OBSOLETE

| | | | | |
|---|---|---|---|---|
| SIZE | 7/8" HEX. | ISSUE 1-5-38 | J.W. | TITLE: FISCHER "DSP-20" LINE CORD BUSHING |
| KIND | BRASS ROD | CHANGED | | |
| SHAPE | | " | | |
| FINISH | CAD. #23 | " | | |
| TEMP. | | " | | |
| PATT. | | " | | |

H. G. FISCHER & CO.
2335 WABANSIA AVE.
CHICAGO, ILL.

CAT. NO.

PART NO. 9379

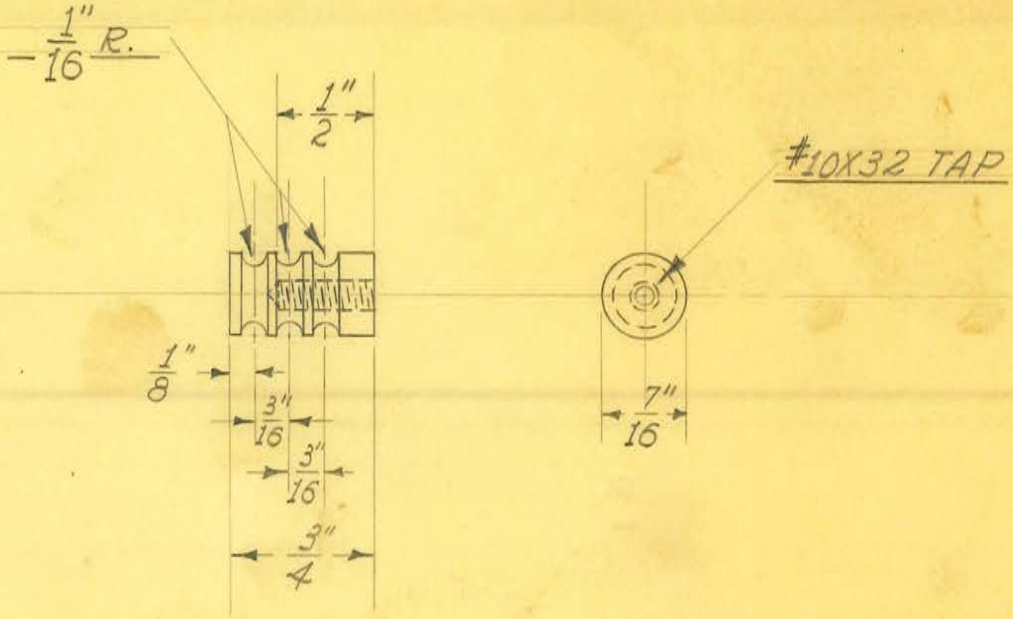


1 REQUIRED

OBSOLETE

| | | | | |
|---|---|---|---|---|
| SIZE | 7/16" DIAM. | ISSUE 12-28-36 | J.W. | TITLE: FISCHER "DSP-20" CWT. BUMPER -INSERT |
| KIND | BRASS | CHANGED | | |
| SHAPE | ROD | " | | |
| FINISH | TINNED | " | | |
| TEMP. | | " | | |
| PATT. | | " | | |

H. G. FISCHER & CO.
2338 WABANSIA AVE.
CHICAGO, ILL.

CAT. NO.

PART NO. 9381

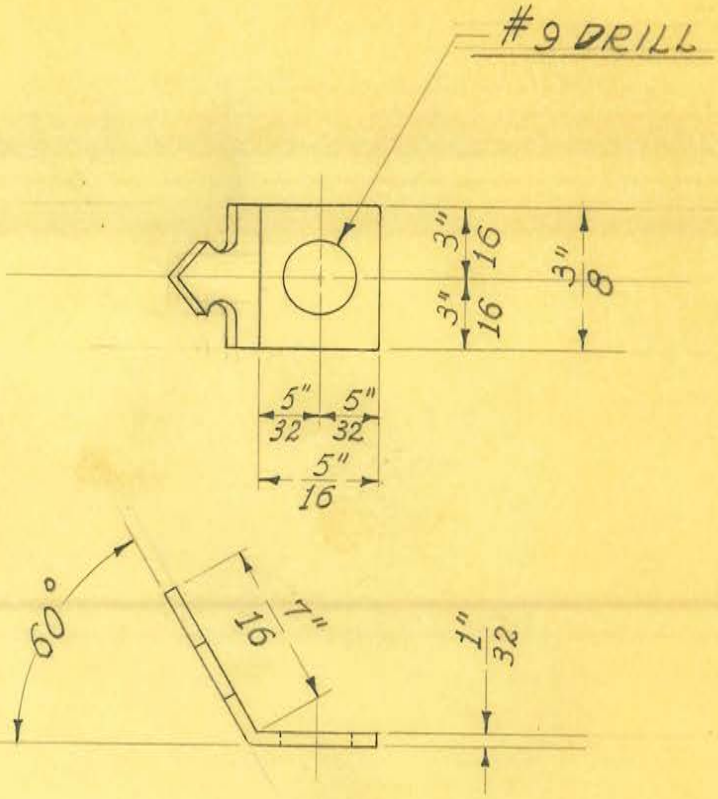


SCALE ½ DOUBLE SIZE

FROM PCE. # 9552

1 REQUIRED

OBSOLETE

| | | | |
|---|---|---|---|
| SIZE | | ISSUE 4-15-37 | J.W. |
| KIND | | CHANGED | |
| SHAPE | | " | |
| FINISH | RED. #87 | " | |
| TEMP. | | " | |
| PATT. | | " | |

**TITLE:** FISCHER "DSP-20" VERTICAL SCALE INDICATOR

H. G. FISCHER & CO.
2335 WABANSIA AVE.
CHICAGO, ILL.

CAT. NO.

PART NO. 9387

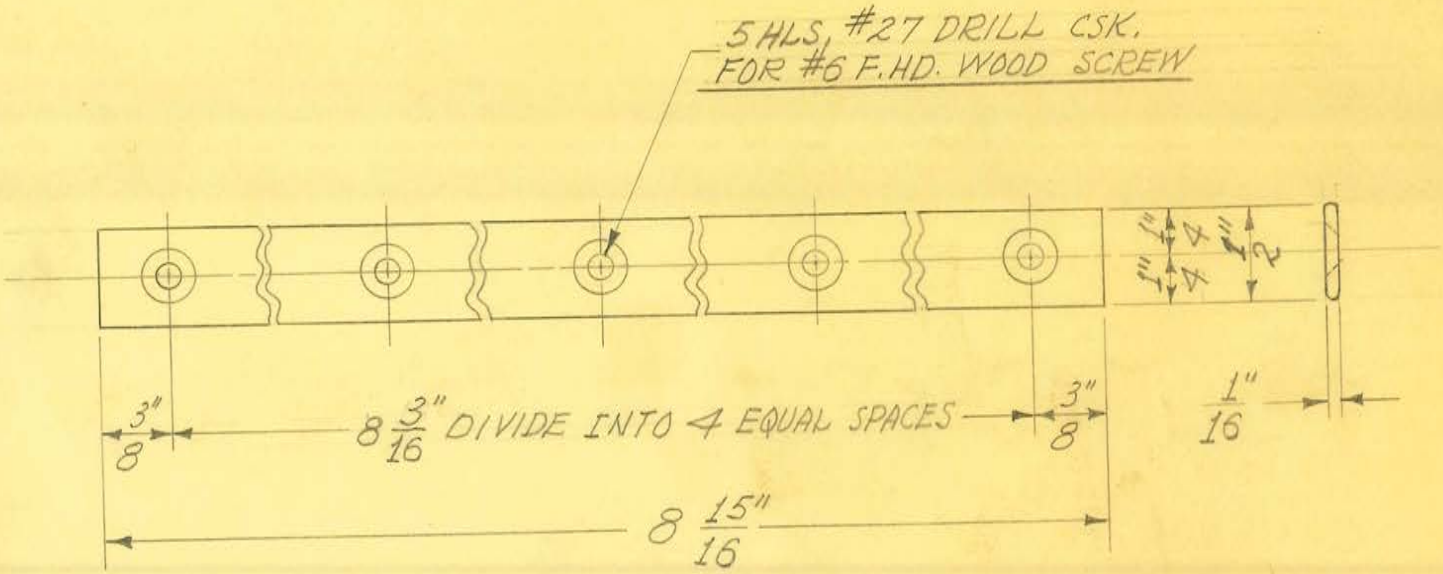


2 REQUIRED

OBSOLETE

| | | | | |
|---|---|---|---|---|
| SIZE | 1/2" X 1/16" | ISSUE 3-2-38 | J.W. | **TITLE:** FISCHER "DSP-20" LEAD LINED CABINET DOOR - LEAD PAN REINFORCING STRIP - TOP & BOTTOM |
| KIND | FLAT WIRE | CHANGED | | |
| SHAPE | | " | | |
| FINISH | | " | | |
| TEMP. | | " | | |
| PATT. | | " | | |

H. G. FISCHER & CO.
2335 WABANSIA AVE.
CHICAGO, ILL.

CAT. NO. —

PART NO. 9388

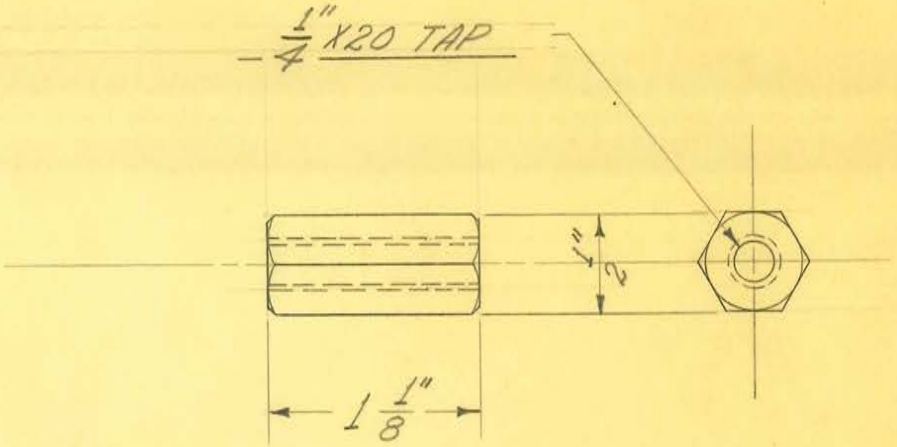


1 REQUIRED

OBSOLETE

| | | | |
|---|---|---|---|
| SIZE | 1/2" HEX. | ISSUE 1-4-38 | J.W. |
| KIND | C.R. STEEL | CHANGED | |
| SHAPE | | " | |
| FINISH | | " | |
| TEMP. | | " | |
| PATT. | | " | |

**TITLE:** FISCHER "DSP-20" LINE CONNECTION MOUNTING BOARD SPACER-LEFT

H. G. FISCHER & CO.
2335 WABANSIA AVE.
CHICAGO, ILL.

CAT. NO.

PART NO. 9392

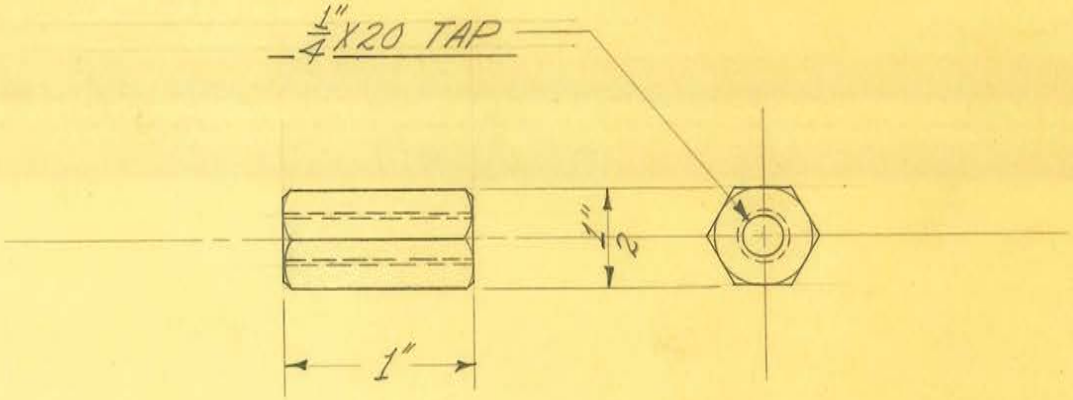


1 REQUIRED

OBSOLETE

| | | | |
|---|---|---|---|
| SIZE | 1/2" HEX. | ISSUE 1-4-38 | J.W. |
| KIND | C.R. STEEL | CHANGED | |
| SHAPE | | " | |
| FINISH | | " | |
| TEMP. | | " | |
| PATT. | | " | |

**TITLE:** FISCHER "DSP-20" LINE CONNECTION MOUNTING BOARD SPACER - RIGHT

H. G. FISCHER & CO.
2335 WABANSIA AVE.
CHICAGO, ILL.

CAT. NO.

PART NO. 9393

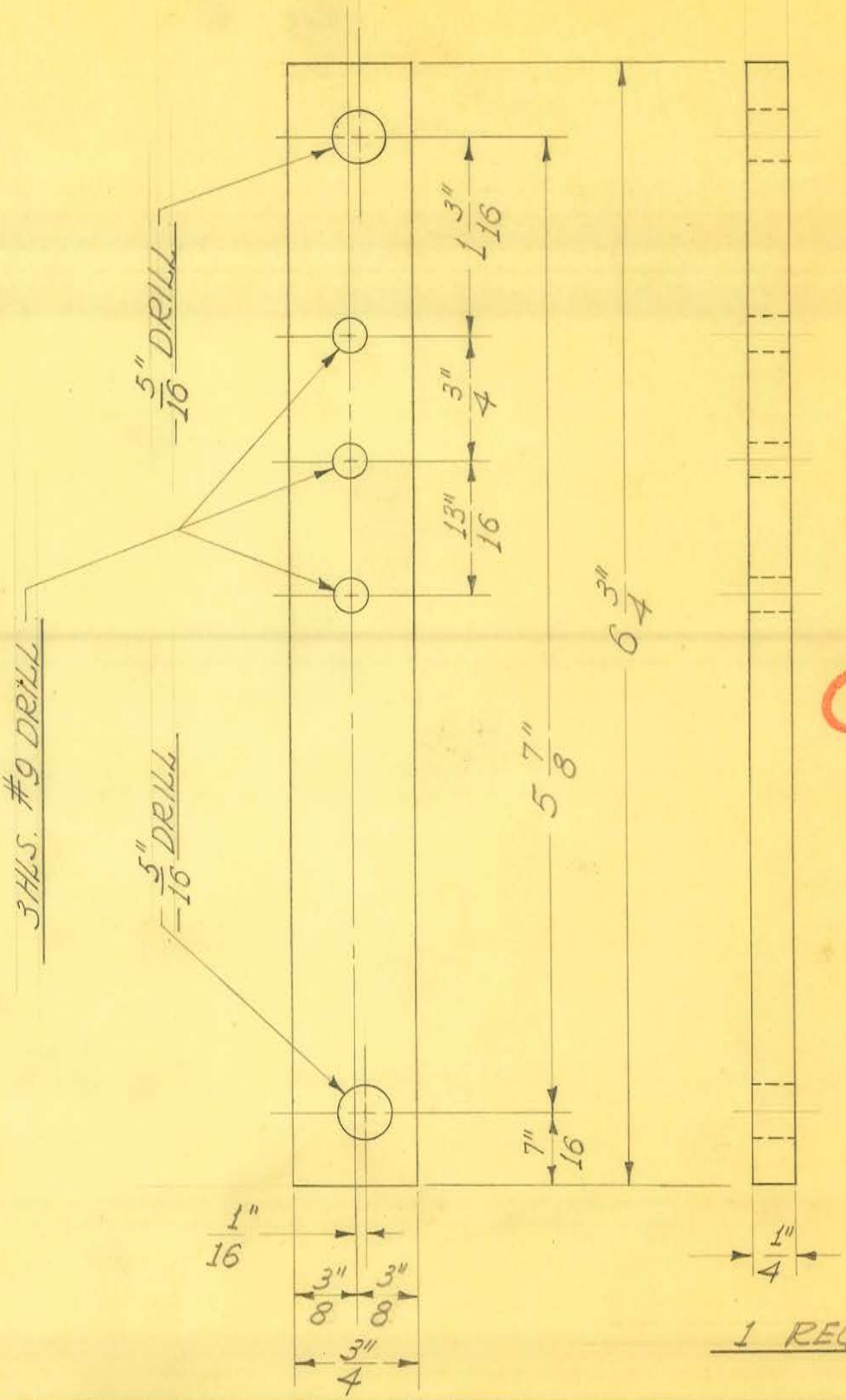


1 REQUIRED

OBSOLETE

| | | | |
|---|---|---|---|
| SIZE | 1/4" SHEET | ISSUE 1-3-38 | J.W. |
| KIND | BAKELITE | CHANGED | |
| SHAPE | | " | |
| FINISH | | " | |
| TEMP. | | " | |
| PATT. | | " | |

**TITLE:** FISCHER "DSP-20" LINE CONNECTION MOUNTING BOARD

H. G. FISCHER & CO.
2335 WABANSIA AVE.
CHICAGO, ILL.

CAT. NO.

PART NO. 9394

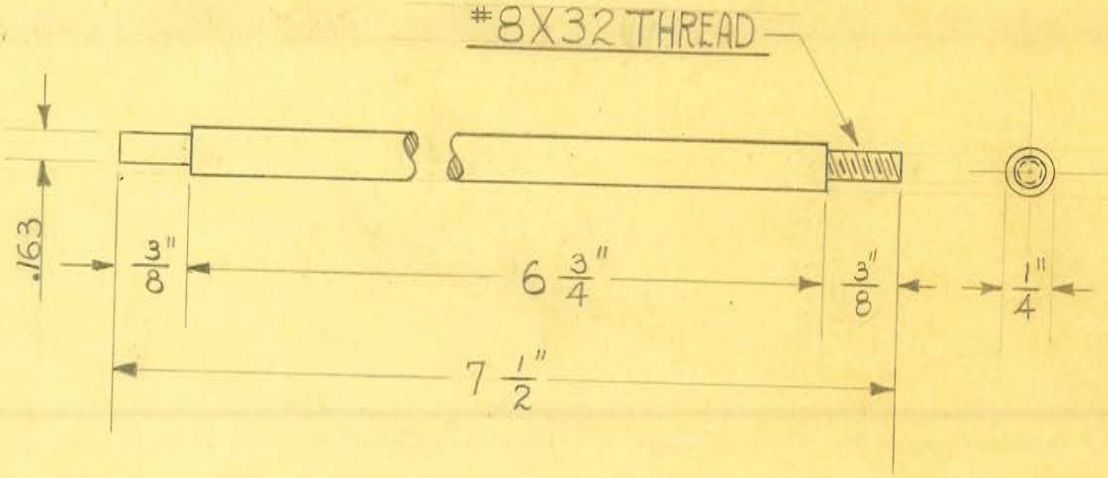


2 REQUIRED

OBSOLETE

| | | | | |
|---|---|---|---|---|
| SIZE | 1/4" | ISSUE 2-15-35 | J.W. | TITLE: MODEL "S.W.17" SHORT WAVE HIGH FREQUENCY OUTFIT OSCILATING COIL CONNECTING ROD |
| KIND | BRASS ROD | CHANGED | | |
| SHAPE | | " | | |
| FINISH | CAD. #23 | " | | |
| TEMP. | | " | | |
| PATT. | | " | | |

H. G. FISCHER & CO.
2335 WABANSIA AVE.
CHICAGO, ILL

CAT. NO.

PART NO. 9406

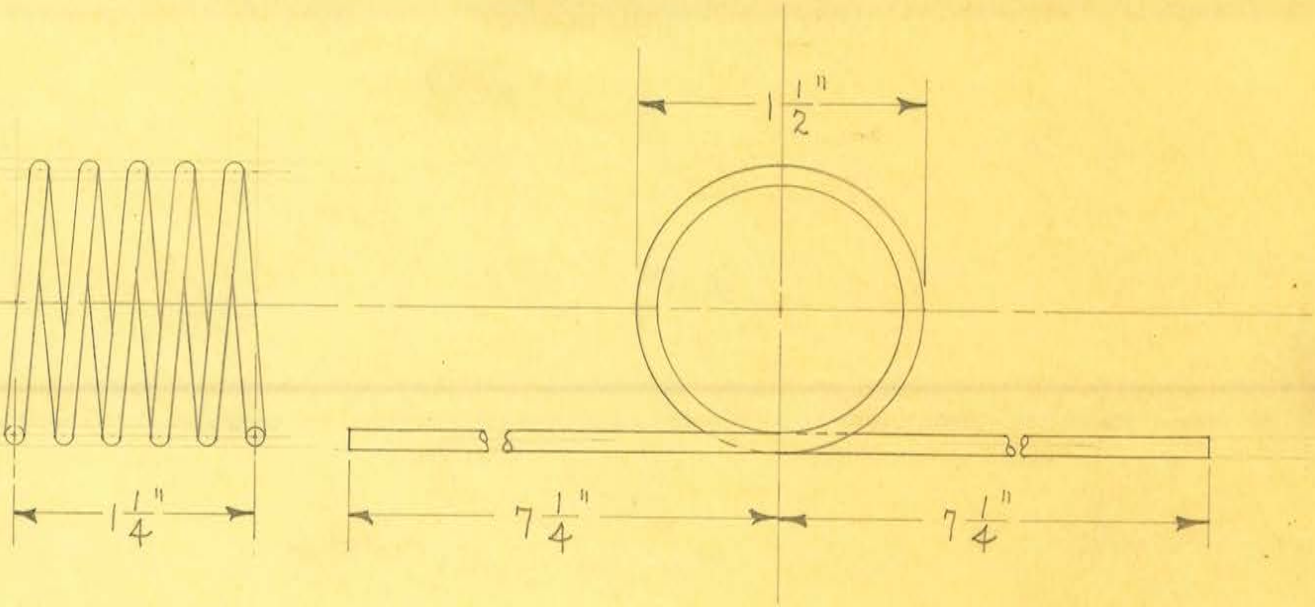


5 TURNS
2 REQUIRED

OBSOLETE

| | | | |
|---|---|---|---|
| SIZE | #10 TINNED | ISSUE 11-6-35 | D.E. |
| KIND | COPPER WIRE | CHANGED | |
| SHAPE | | " | |
| FINISH | | " | |
| TEMP. | | " | |
| PATT. | | " | |

**TITLE:** MODEL "SW17" SHORT WAVE HIGH FREQ. OUTFIT
PATIENT'S TUNING COIL

H. G. FISCHER & CO.
2335 WABANSIA AVE.
CHICAGO, ILL.

CAT. NO.

PART NO. 9410

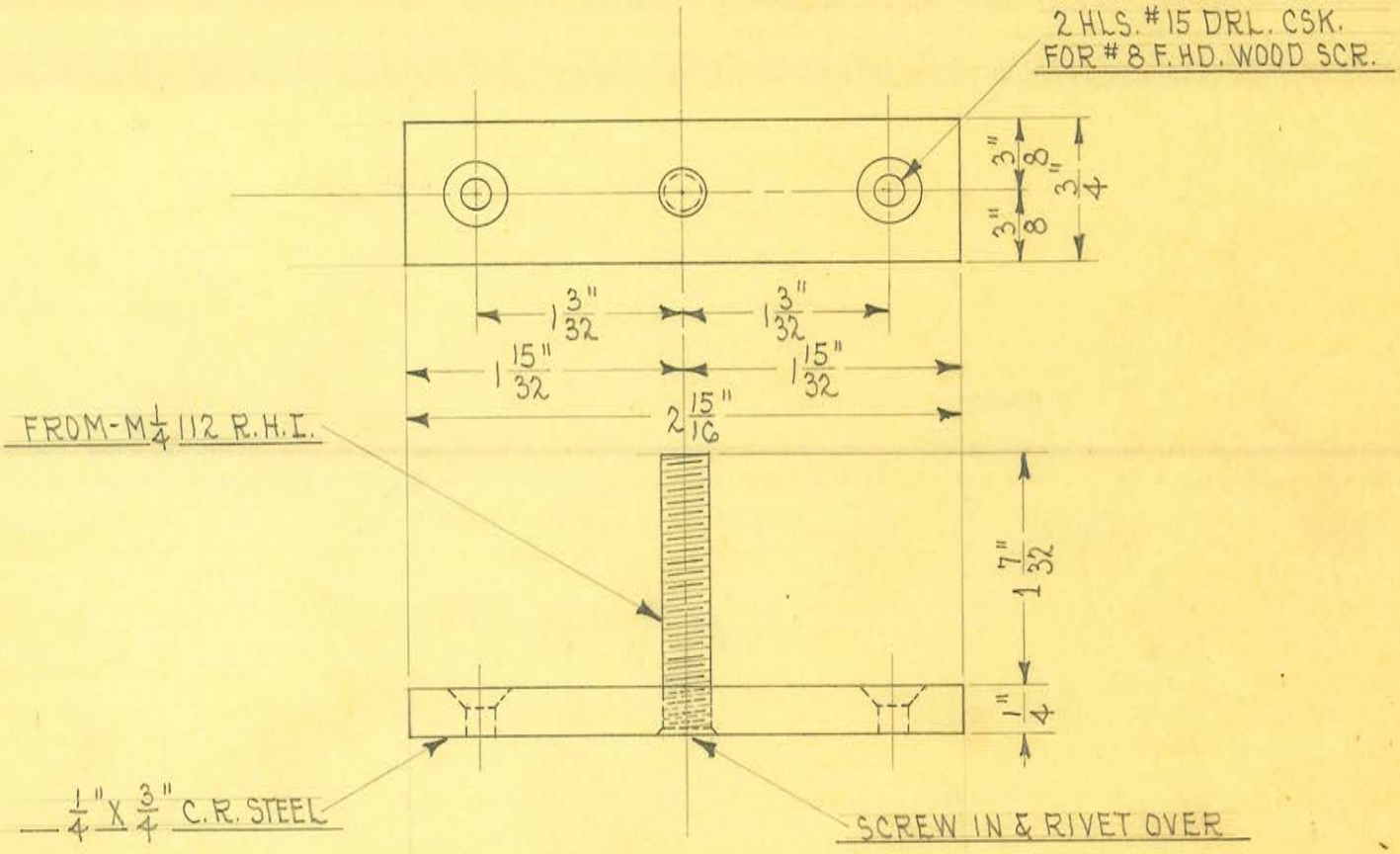


1 REQUIRED

OBSOLETE

| | | | | |
|---|---|---|---|---|
| SIZE | | ISSUE 2-9-35 | A.E. | **TITLE:** MODEL "SW17" SHORT WAVE HIGH FREQ. OUTFIT ELECT. UNIT RACK CLAMP STUD ASSEM. |
| KIND | | CHANGED | | |
| SHAPE | | " | | |
| FINISH | BLACK #80 | " | | |
| TEMP. | | " | | |
| PATT. | | " | | |

H. G. FISCHER & CO.
2335 WABANSIA AVE.
CHICAGO, ILL

CAT. NO.

PART NO. 9418G

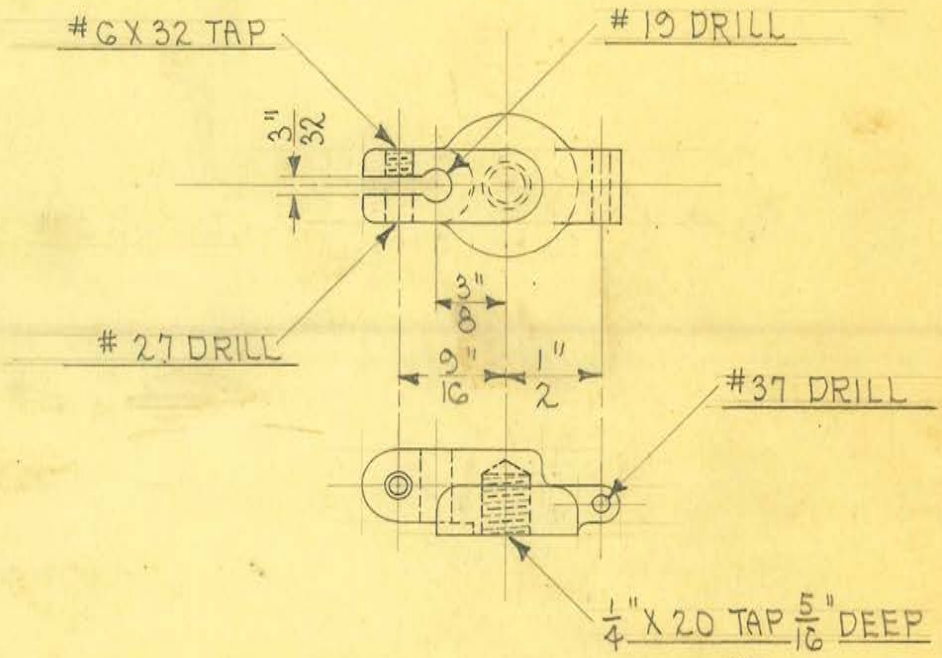


4 REQUIRED

OBSOLETE

| | | | | |
|---|---|---|---|---|
| SIZE | | ISSUE 2-15-35 | W.E. | **TITLE:** MODEL "SW17" SHORT WAVE HIGH FREQ. OUTFIT COIL SINGLE CLAMP |
| KIND | BRASS CASTING | CHANGED | | |
| SHAPE | | " | | |
| FINISH | CAD. #23 | " | | |
| TEMP. | | " | | |
| PATT. | 6847-801 | " | | |

H. G. FISCHER & CO.
2335 WABANSIA AVE.
CHICAGO, ILL

CAT. NO.

PART NO. 9421F

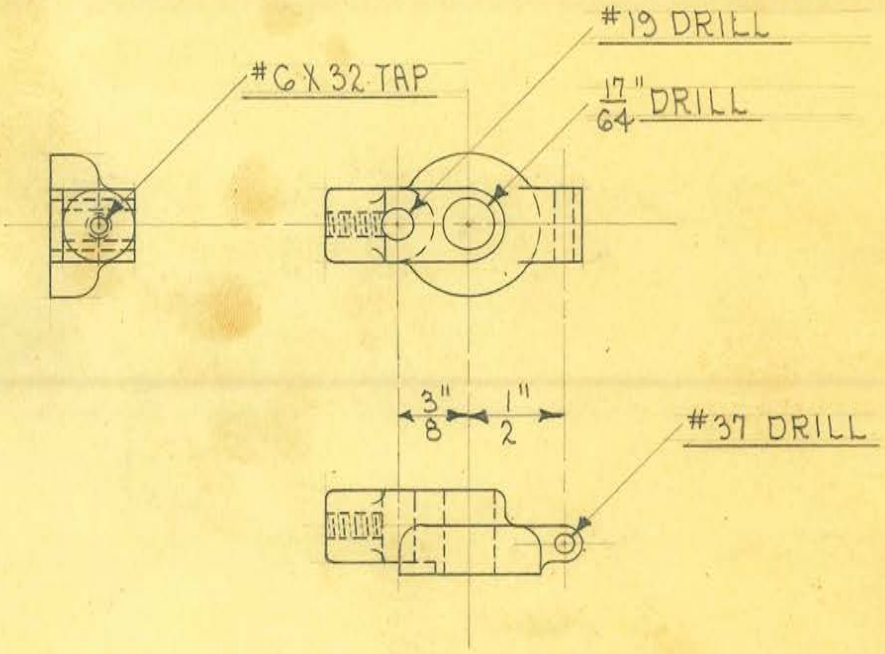


4 REQUIRED

OBSOLETE

| | | | | |
|---|---|---|---|---|
| SIZE | | ISSUE 3-29-35 | A.E. | **TITLE:** MODEL "SW17" SHORT WAVE HIGH FREQ. OUTFIT COIL SINGLE CLAMP |
| KIND | BRASS CASTING | CHANGED | | |
| SHAPE | | " | | |
| FINISH | CAD. #23 | " | | |
| TEMP. | | " | | |
| PATT. | 6847-801 | " | | |

H. G. FISCHER & Co.
2335 WABANSIA AVE.
CHICAGO, ILL

CAT. NO.

PART NO. 9421AF

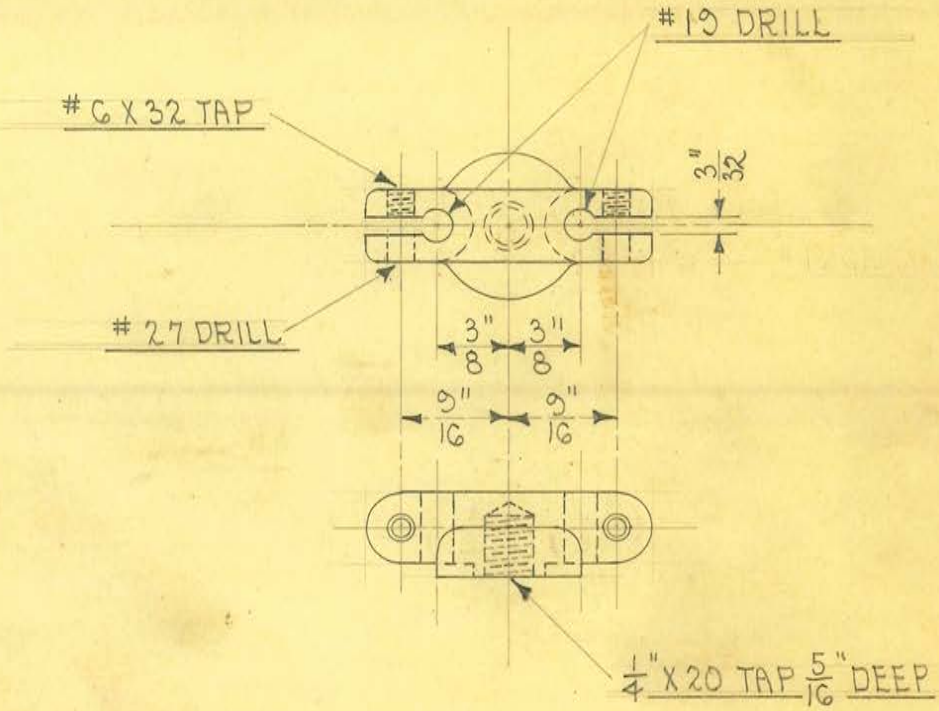


2 REQUIRED

OBSOLETE

| | | | | |
|---|---|---|---|---|
| SIZE | | ISSUE 2-14-35 | 2.8. | **TITLE:** MODEL "SW17" SHORT WAVE HIGH FREQ. OUTFIT COIL DOUBLE CLAMP |
| KIND | BRASS CASTING | CHANGED | | |
| SHAPE | | " | | |
| FINISH | CAD. #23 | " | | |
| TEMP. | | " | | |
| PATT. | G848-802 | " | | |

| | | |
|---|---|---|
| H. G. FISCHER & CO. 2335 WABANSIA AVE. CHICAGO, ILL | CAT. NO. | PART NO. 9422F |

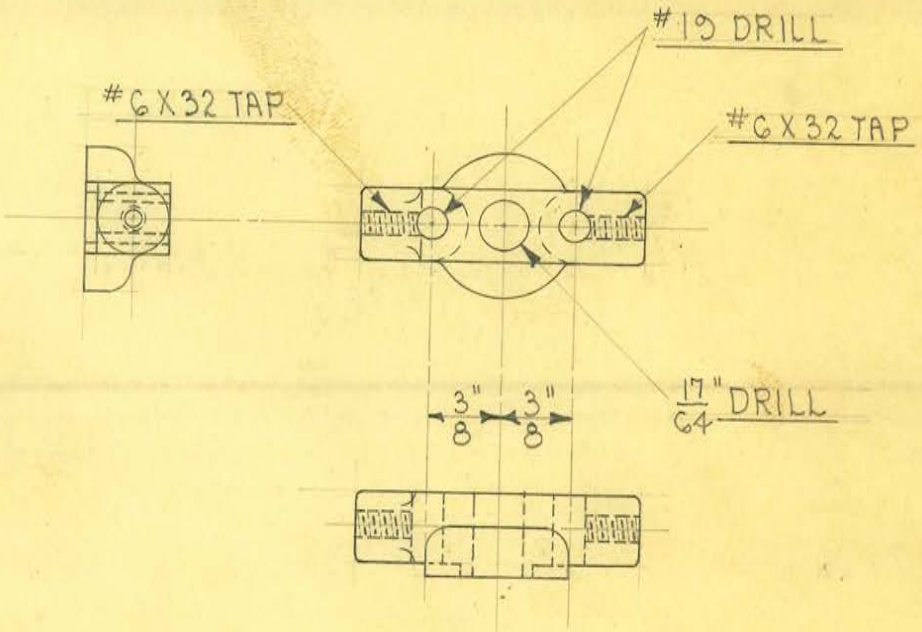


2 REQUIRED

OBSOLETE

| | | | |
|---|---|---|---|
| SIZE | | ISSUE 3-29-35 | A.E. |
| KIND | BRASS CASTING | CHANGED | |
| SHAPE | | " | |
| FINISH | CAD. #23 | " | |
| TEMP. | | " | |
| PATT. | 6848-802 | " | |

**TITLE:** MODEL "SW17" SHORT WAVE HIGH FREQ. OUTFIT
COIL DOUBLE CLAMP

H. G. FISCHER & CO.
2335 WABANSIA AVE.
CHICAGO, ILL

CAT. NO.

PART NO. 9422 AF

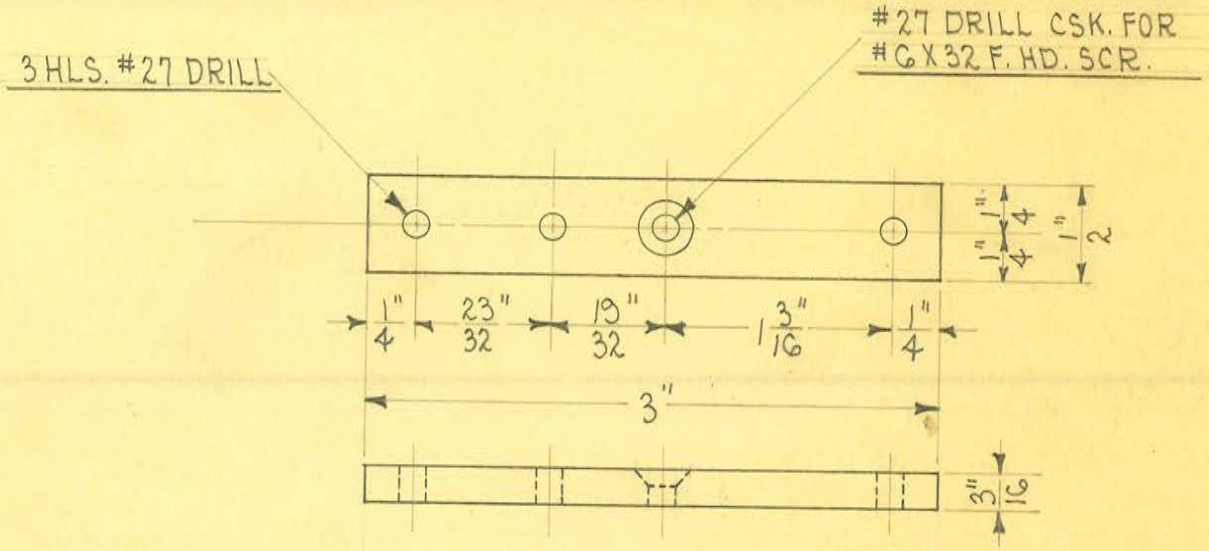


1 REQUIRED

OBSOLETE

| | | | |
|---|---|---|---|
| SIZE | 3/16" SHEET | ISSUE 4-2-35 | 2/7. |
| KIND | RICHELAIN | CHANGED | |
| ~~SHAPE~~ | BAKELITE | " | |
| FINISH | | " | |
| TEMP. | | " | |
| PATT. | | " | |

**TITLE:** MODEL "SW17" SHORT WAVE HIGH FREQ. OUTFIT
GRID COIL CONDENSER SUPPORT

H. G. FISCHER & CO.
2335 WABANSIA AVE.
CHICAGO, ILL

CAT. NO.

PART NO. 9423

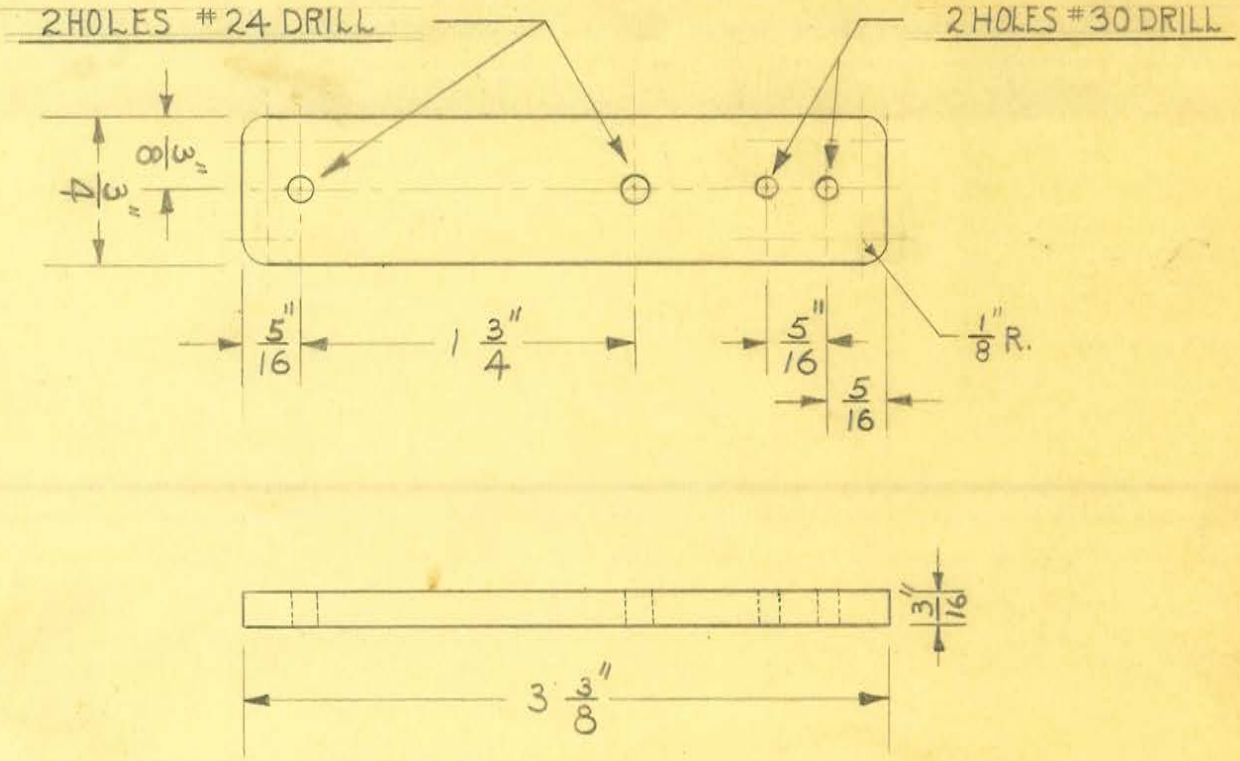


1 REQUIRED

OBSOLETE

| | | | | |
|---|---|---|---|---|
| SIZE | 3/16" SHEET | ISSUE 2-15-35 | J.W. | **TITLE:** MODEL "S.W.17" SHORT WAVE HIGH FREQUENCY OUTFIT MILLIAMPERE METER THERMOCOUPLE SUPP. |
| KIND | RICHELAIN | CHANGED | | |
| SHAPE | BAKELITE | " | | |
| FINISH | | " | | |
| TEMP. | | " | | |
| PATT. | | " | | |

H. G. FISCHER & CO.
2335 WABANSIA AVE.
CHICAGO, ILL

CAT. NO.

PART NO. 9425

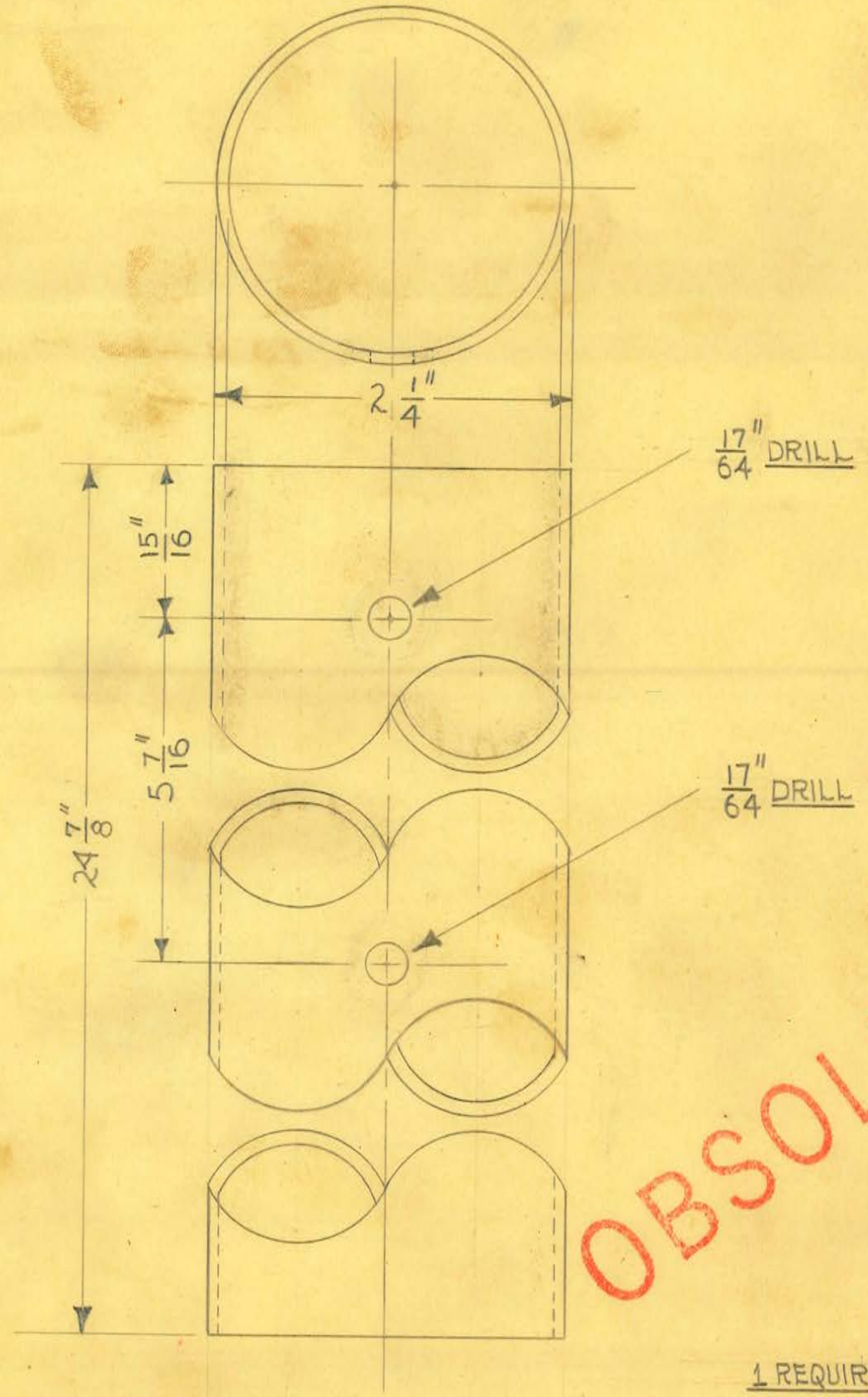


OBSOLETE

1 REQUIRED

| | | | |
|---|---|---|---|
| SIZE | 2 1/4 O.D. X BIR. GA. .083 | ISSUE 5-2-35 | J.W. |
| KIND | SEAMLESS STEEL MECH. TUBE | CHANGED | |
| SHAPE | | " | |
| FINISH | CAD. #23 | " | |
| TEMP. | | " | |
| PATT. | | " | |

**TITLE:** SHOCKPROOF DENTAL X UPRIGHT SLEEVE

H. G. FISCHER & CO.
2335 WABANSIA AVE.
CHICAGO, ILL.

CAT. NO.

PART NO. 9503

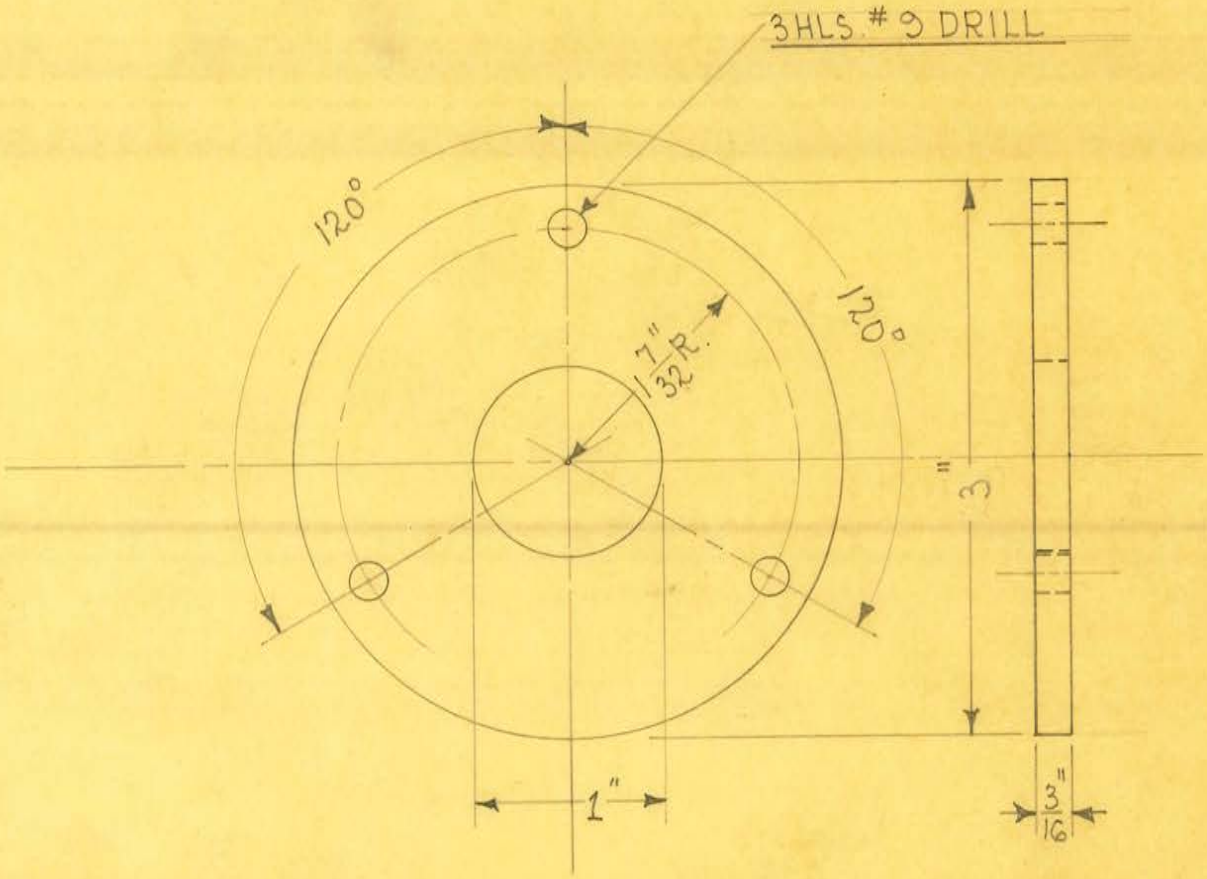


1 REQUIRED

OBSOLETE

| | | | |
|---|---|---|---|
| SIZE | 3/16" SHEET | ISSUE 6-29-36 | A.E. |
| KIND | C.R. STEEL | CHANGED | |
| SHAPE | | " | |
| FINISH | | " | |
| TEMP. | | " | |
| PATT. | | " | |

**TITLE:** SHOCKPROOF DENTAL "X" COUNTERWEIGHT BUMPER PLATE

H. G. FISCHER & CO.
2335 WABANSIA AVE.
CHICAGO, ILL.

CAT. NO.

PART NO. 9504 1/2

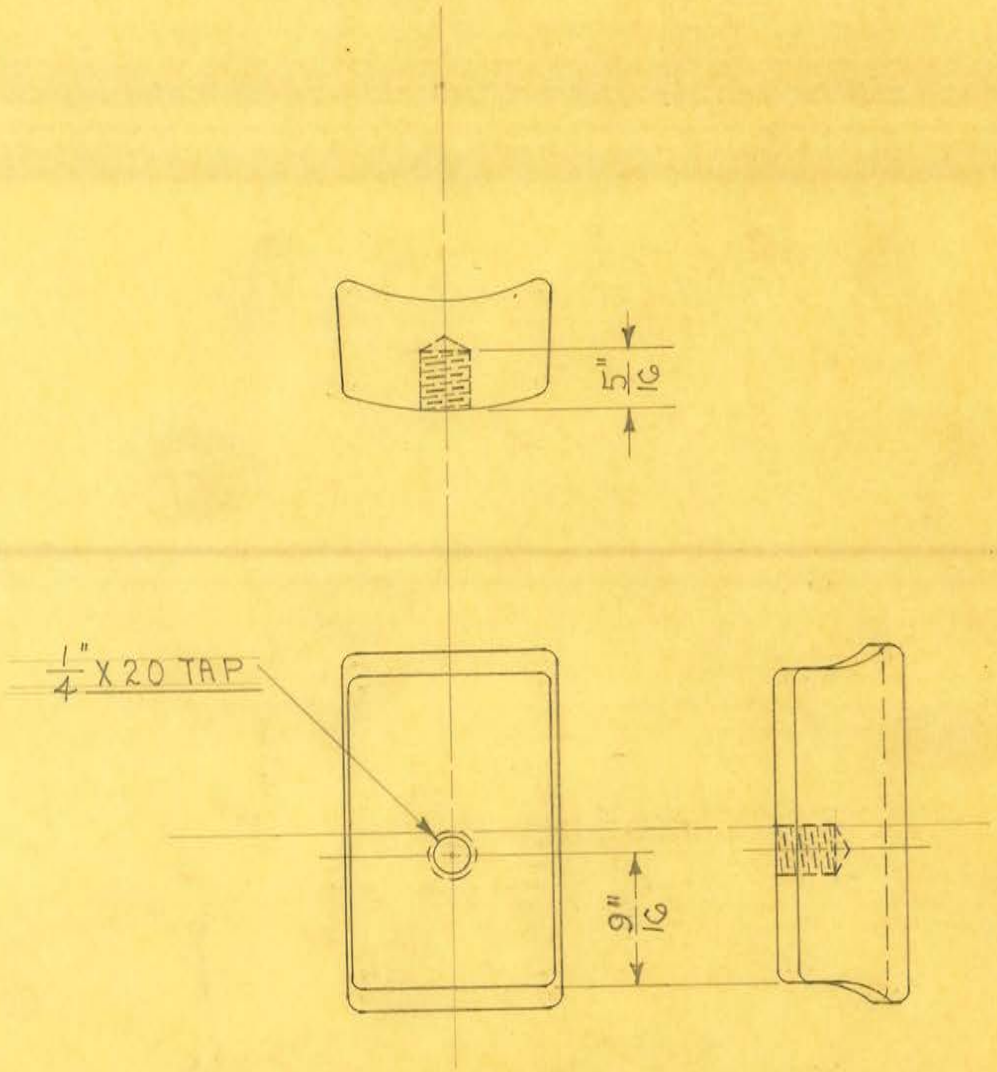


1 REQUIRED

OBSOLETE

| | | | | |
|---|---|---|---|---|
| SIZE | | ISSUE 6-30-36 | A.E. | TITLE: SHOCKPROOF DENTAL "X" UPRIGHT TUBE CLAMP BLOCK |
| KIND | IRON CASTING | CHANGED 6-24-37 | J.W. | |
| SHAPE | | " | | |
| FINISH | | " | | |
| TEMP. | | " | | |
| PATT. | 298-960 | " | | |

H. G. FISCHER & CO.
2335 WABANSIA AVE.
CHICAGO, ILL.

CAT. NO.

PART NO. 9505 1/2 F

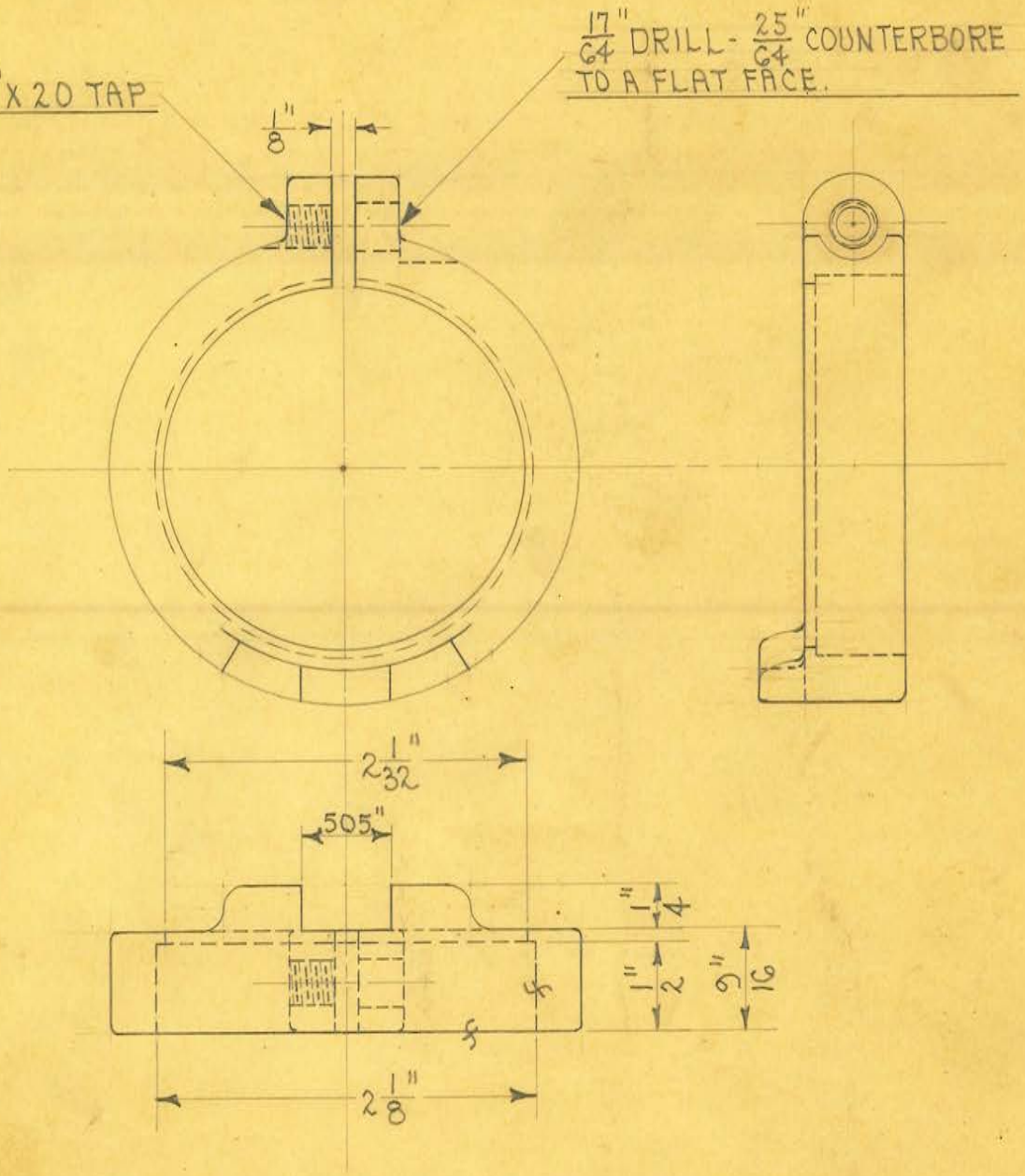


1 REQUIRED

OBSOLETE

| | | | |
|---|---|---|---|
| SIZE | | ISSUE 4-29-35 | J.E. |
| KIND | BRASS CASTING | CHANGED | |
| SHAPE | | " | |
| FINISH | MAH. #51 | " | |
| TEMP. | | " | |
| PATT. | 8005-823 | " | |

**TITLE:** SHOCKPROOF DENTAL "X" CONE BEARING CLAMP

H. G. FISCHER & CO.
2335 WABANSIA AVE.
CHICAGO, ILL.

CAT. NO.

PART NO. 9509F

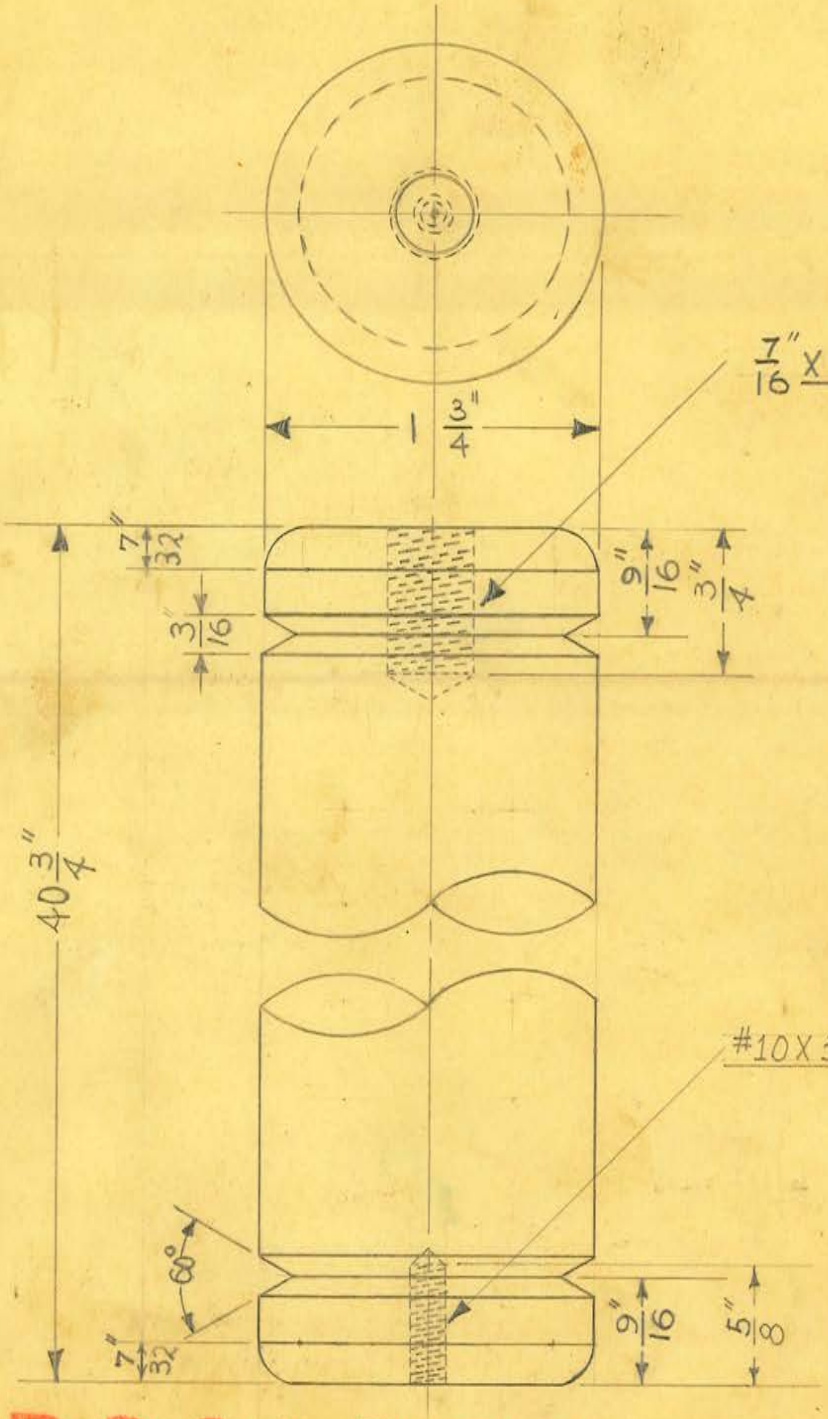


OBSOLETE

1 REQUIRED

| | | | |
|---|---|---|---|
| SIZE | 1 3/4" | ISSUE 5-1-35 | J.W |
| KIND | COLD ROLLED | CHANGED 2-10-36 | A. E. |
| SHAPE | ROUND | " | |
| FINISH | | " | |
| TEMP. | | " | |
| PATT. | | " | |

**TITLE:** SHOCKPROOF DENTAL X COUNTERWEIGHT (FINISHED)

H. G. FISCHER & CO.
2335 WABANSIA AVE.
CHICAGO, ILL.

CAT. NO.

PART NO. 9511AFA

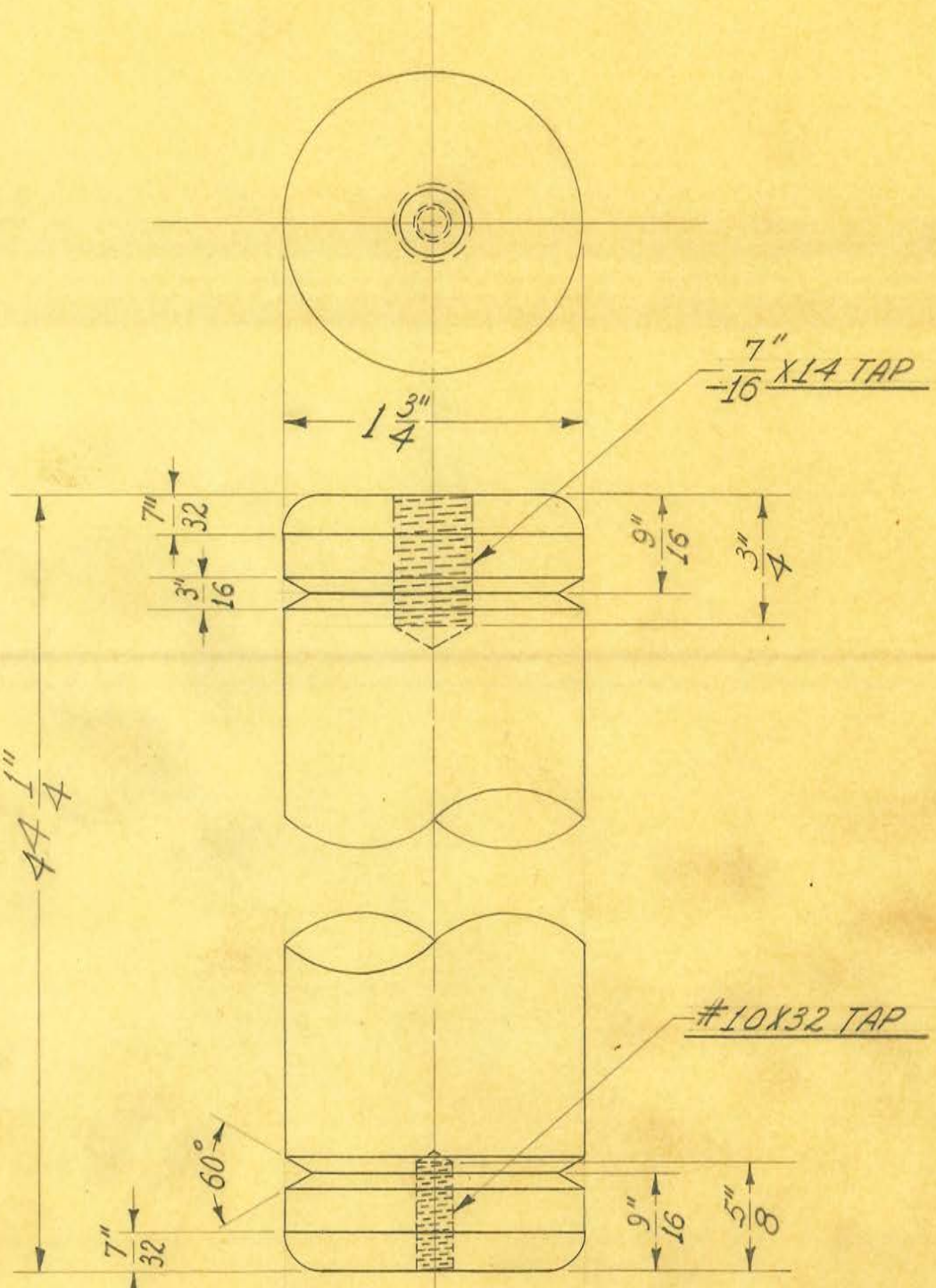


OBSOLETE

1 REQUIRED

| | | | |
|---|---|---|---|
| SIZE | 1¾" DIAM. | ISSUE 12-9-37 | J.W. |
| KIND | C.R. STEEL | CHANGED | |
| SHAPE | ROD | " | |
| FINISH | | " | |
| TEMP. | | " | |
| PATT. | | " | |

**TITLE:** SHOCKPROOF DENTAL X COUNTER WEIGHT (FINISHED)

H. G. FISCHER & CO.
2335 WABANSIA AVE.
CHICAGO, ILL.

CAT. NO.

PART NO. 9511BF

6 X 32 TAP

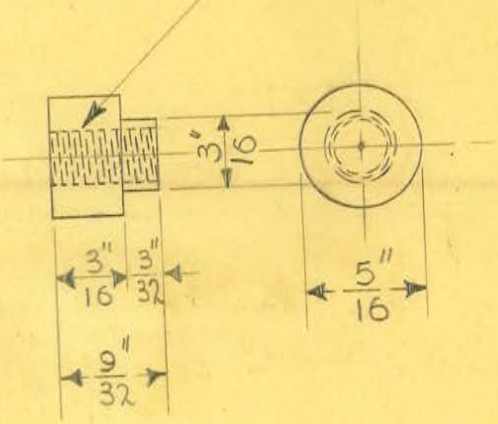


SCALE ÷ 2 DIAMETERS

1 REQUIRED

OBSOLETE

| | | | |
|---|---|---|---|
| SIZE | 5/16" ROD | ISSUE 5-6-35 | J.W. |
| KIND | COLD ROLLED | CHANGED | |
| SHAPE | | " | |
| FINISH | | " | |
| TEMP. | | " | |
| PATT. | | " | |

TITLE: SHOCKPROOF DENTAL X TRANSF. TANK OVERFLOW BUSHING

H. G. FISCHER & CO.
2335 WABANSIA AVE.
CHICAGO, ILL.

CAT. NO.

PART NO. 9512

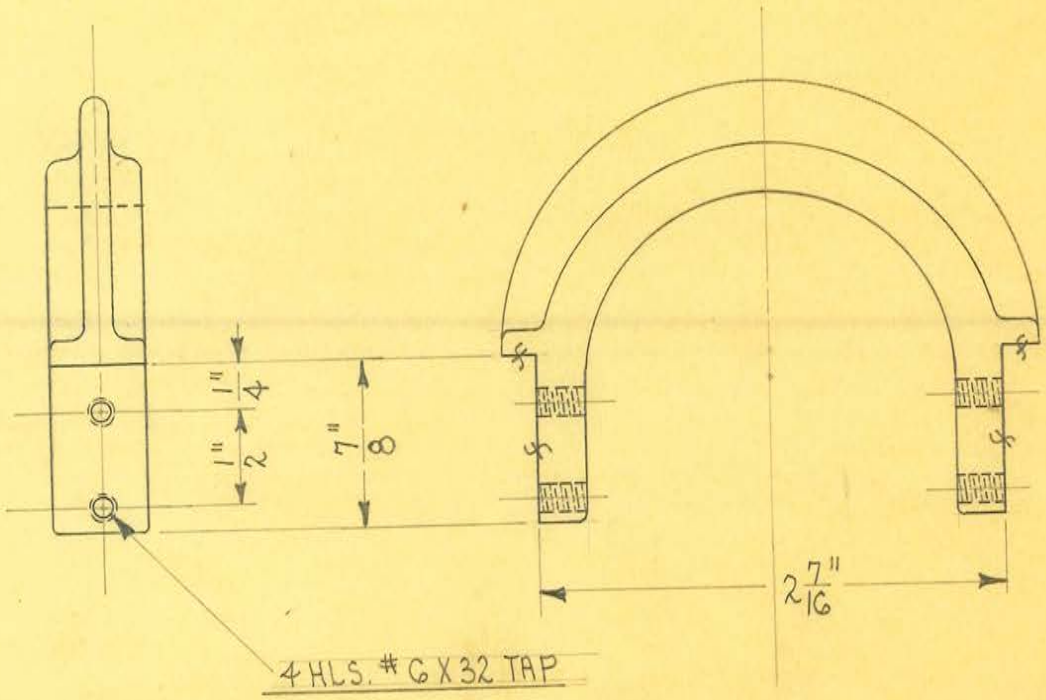


1 REQUIRED

OBSOLETE

| | | | | |
|---|---|---|---|---|
| SIZE | | ISSUE 4-18-35 | J.E. | TITLE: SHOCKPROOF DENTAL "X" U-BAR BRACE |
| KIND | ALUM. CASTING | CHANGED | | |
| SHAPE | | " | | |
| FINISH | MAH. #51 | " | | |
| TEMP. | | " | | H. G. FISCHER & CO. 2335 WABANSIA AVE. CHICAGO, ILL. — CAT. NO. — PART NO. 9513F |
| PATT. | 7982-821 | " | | |

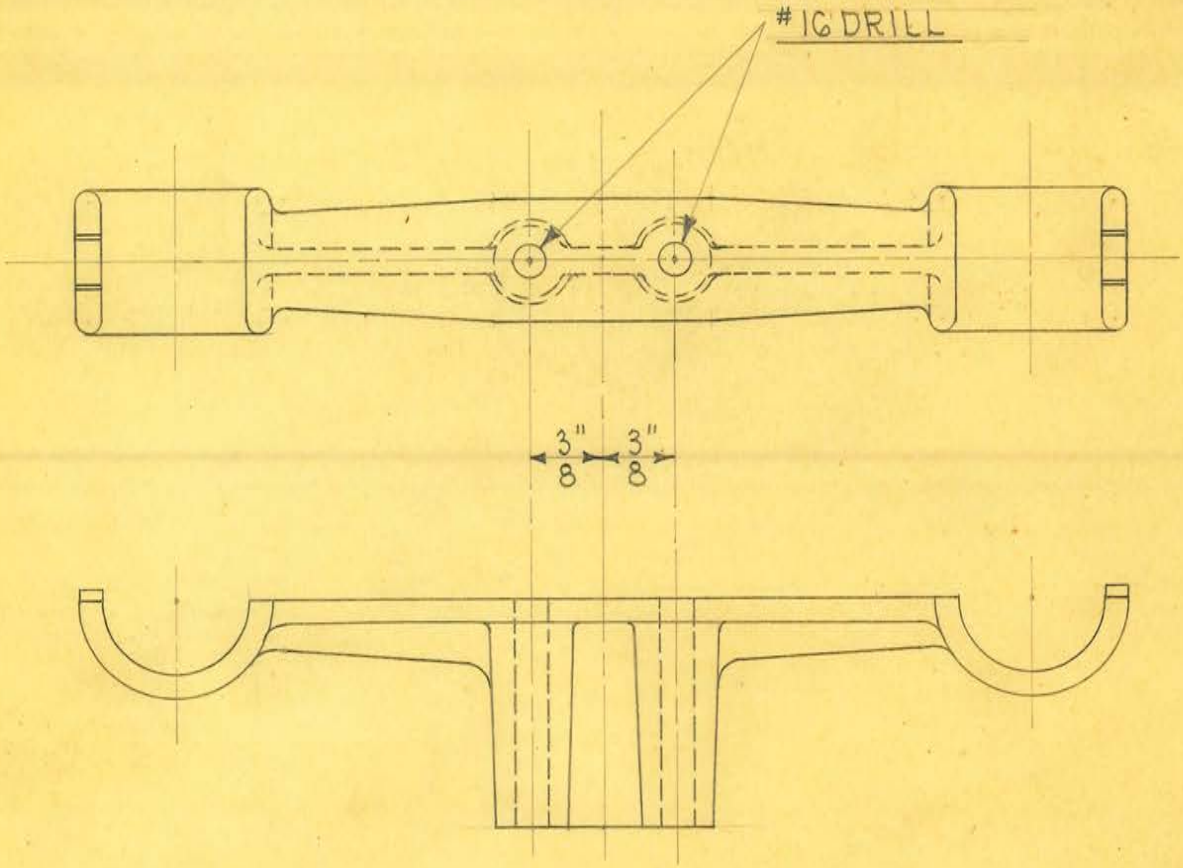


1 REQUIRED

OBSOLETE

| | | | |
|---|---|---|---|
| SIZE | | ISSUE 5-21-35 | A.E. |
| KIND | ALUM. CASTING | CHANGED | |
| SHAPE | | " | |
| FINISH | MAH. #51 | " | |
| TEMP. | | " | |
| PATT. | 8690-837 | " | |

**TITLE:** SHOCKPROOF DENTAL "X" UPRIGHT TUBE SLIDE CABLE SUPPORT - LOWER

H. G. FISCHER & CO.
2335 WABANSIA AVE.
CHICAGO, ILL.

CAT. NO.

PART NO. 9516F

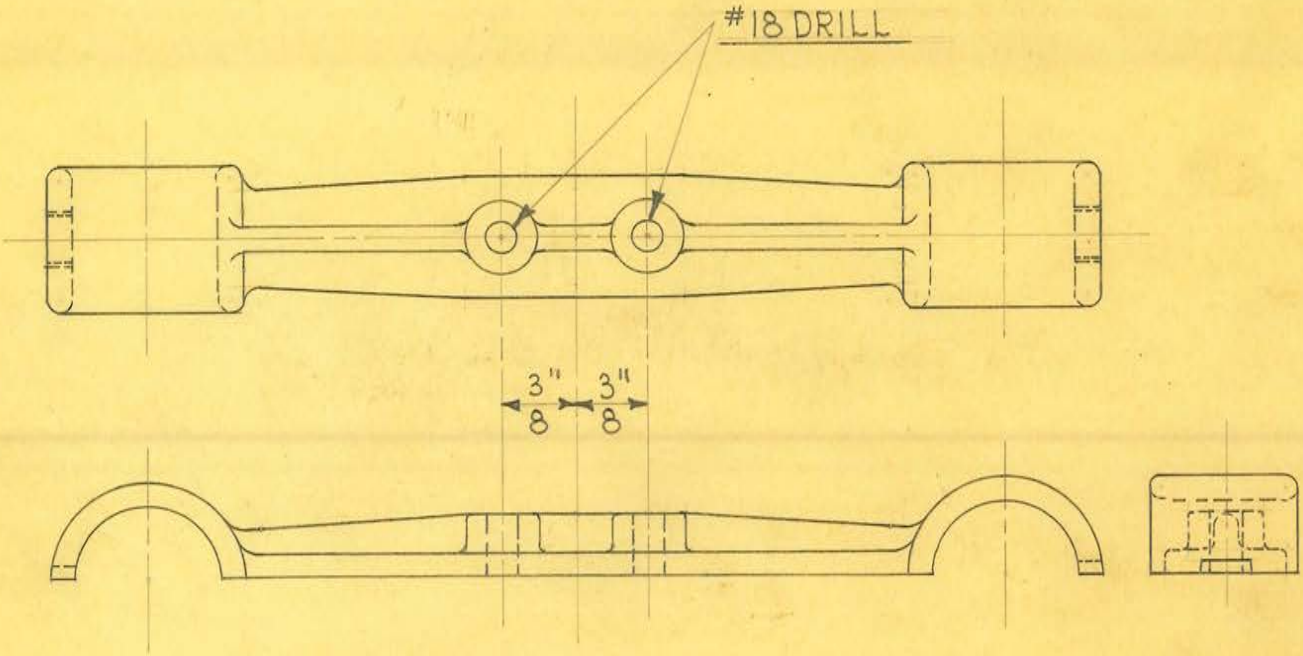


1 REQUIRED

OBSOLETE

| | | | |
|---|---|---|---|
| SIZE | | ISSUE 5-21-35 | A.E. |
| KIND | ALUM. CASTING | CHANGED | |
| SHAPE | | " | |
| FINISH | MAH. #51 | " | |
| TEMP. | | " | |
| PATT. | 8691-838 | " | |

**TITLE:** SHOCKPROOF DENTAL "X" UPRIGHT TUBE SLIDE CABLE SUPPORT - UPPER

H. G. FISCHER & CO.
2335 WABANSIA AVE.
CHICAGO, ILL.

CAT. NO.

PART NO. 9517F

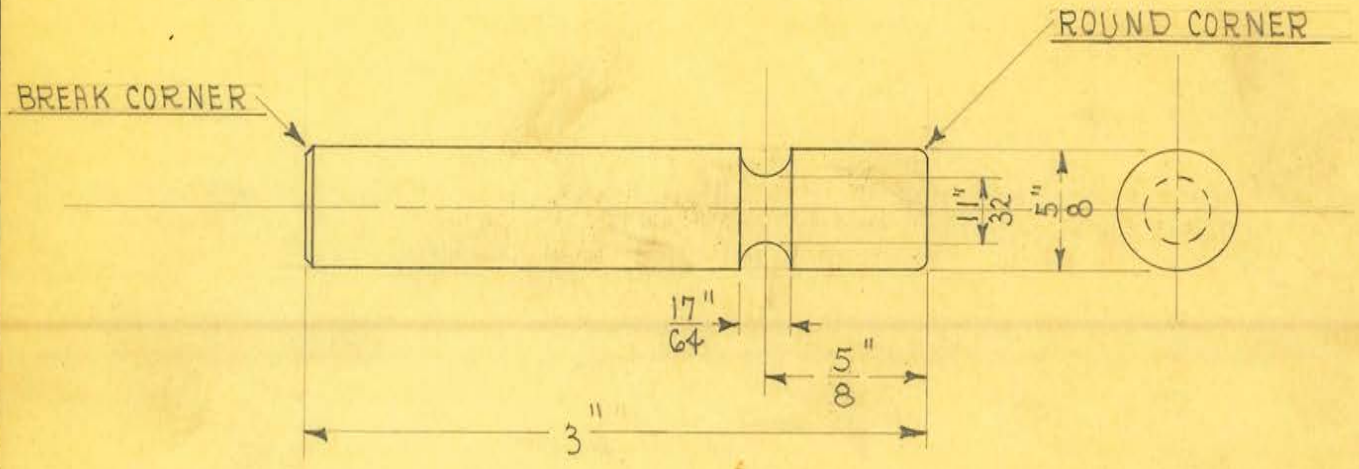


1 REQUIRED

OBSOLETE

| | | | |
|---|---|---|---|
| SIZE | 5/8" DIAM. | ISSUE 5-20-35 | J.E. |
| KIND | C.R. STEEL | CHANGED 2-10-36 | J.E. |
| SHAPE | | " | |
| FINISH | CAD. #23 | " | |
| TEMP. | | " | |
| PATT. | | " | |

**TITLE:** SHOCKPROOF DENTAL "X" TUBE HOUSING SUPPORT SHAFT.

H. G. FISCHER & CO.
2335 WABANSIA AVE.
CHICAGO, ILL.

CAT. NO.

PART NO. 9519A

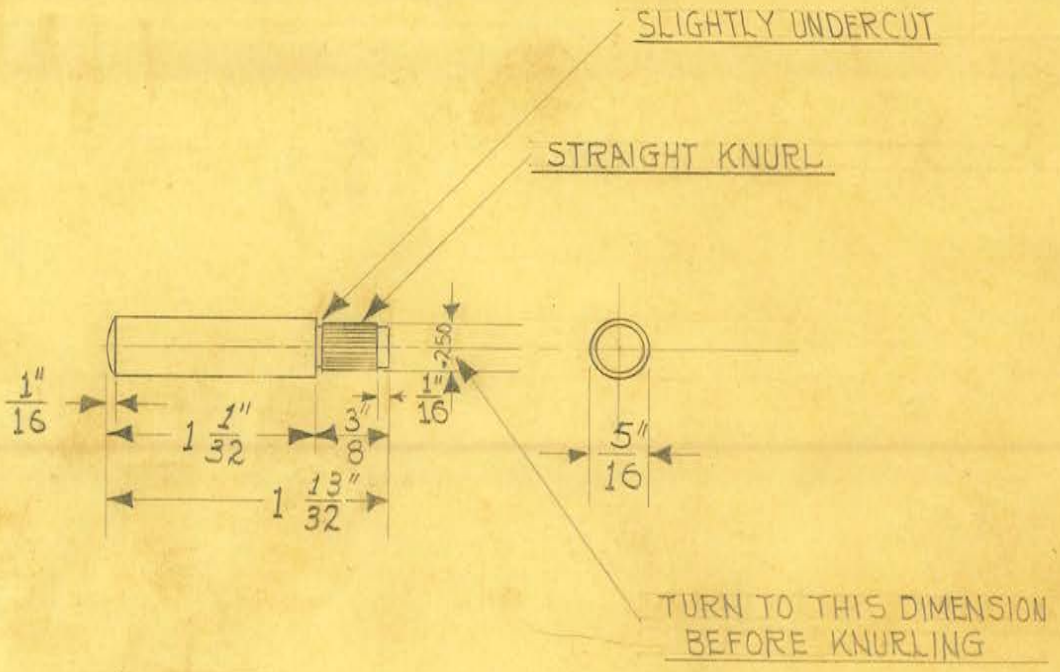


1 REQUIRED

OBSOLETE

| | | | |
|---|---|---|---|
| SIZE | 5/16" ROD | ISSUE 5-9-35 | J.W. |
| KIND | C.R. STEEL | CHANGED 11-20-36 | J.W. |
| SHAPE | | " | |
| FINISH | CRD. #23 | " | |
| TEMP. | | " | |
| PATT. | | " | |

**TITLE:** SHOCKPROOF DENTAL X HORIZONTAL SLIDE ROLLER SHAFT

H. G. FISCHER & CO.
2335 WABANSIA AVE.
CHICAGO, ILL.

CAT. NO.

PART NO. 9521

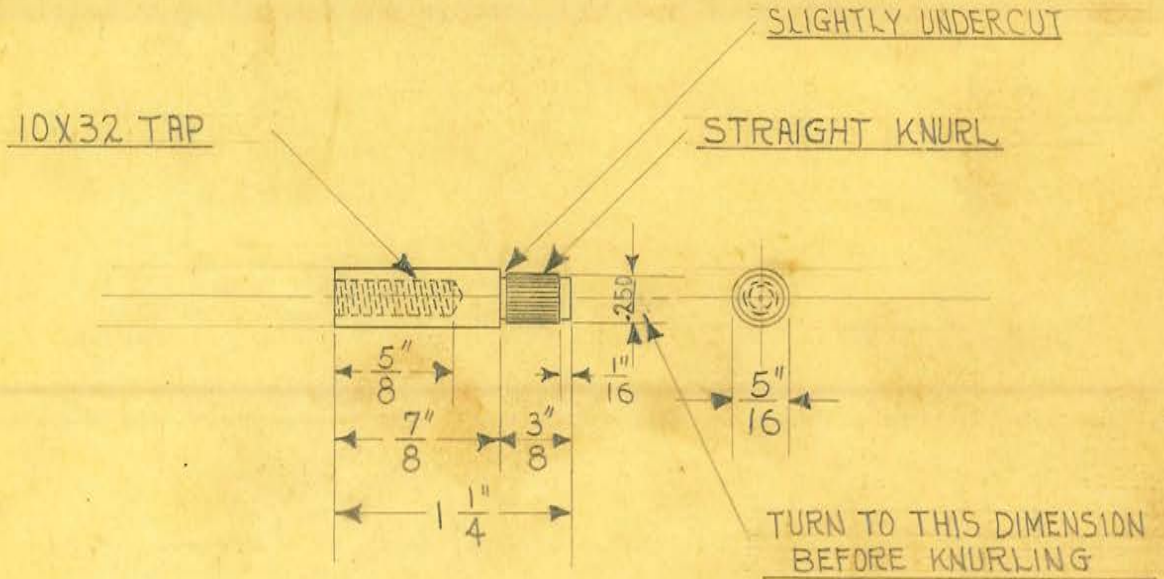


2 REQUIRED

OBSOLETE

| | | | |
|---|---|---|---|
| SIZE | 5/16" ROD | ISSUE 5-9-35 | J.W. |
| KIND | COLD ROLLED | CHANGED | |
| SHAPE | | " | |
| FINISH | CAD. # 23 | " | |
| TEMP. | | " | |
| PATT. | | " | |

**TITLE:** SHOCKPROOF DENTAL X UPRIGHT TUBE SLIDE RADIUS CABLE SUPP. SHAFT

H. G. FISCHER & CO.
2335 WABANSIA AVE.
CHICAGO, ILL.

CAT. NO.

PART NO. 9522

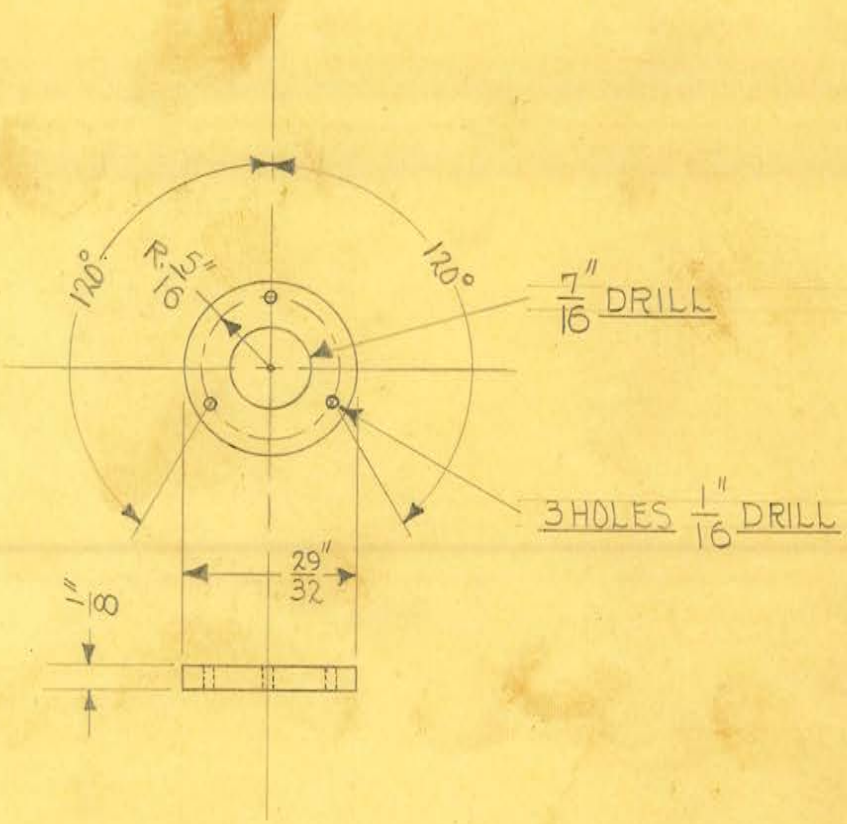


1 REQUIRED

OBSOLETE

| | | | |
|---|---|---|---|
| SIZE | 1/8" SOFT | ISSUE 5-9-35 | J.W. |
| KIND | SHEET RUBB. | CHANGED | |
| SHAPE | | " | |
| FINISH | | " | |
| TEMP. | | " | |
| PATT. | | " | |

**TITLE:** SHOCKPROOF DENTAL X HORIZONTAL ADJUST. RUBBER WASHER

H. G. FISCHER & CO.
2335 WABANSIA AVE.
CHICAGO, ILL.

CAT. NO.

PART NO. 9523

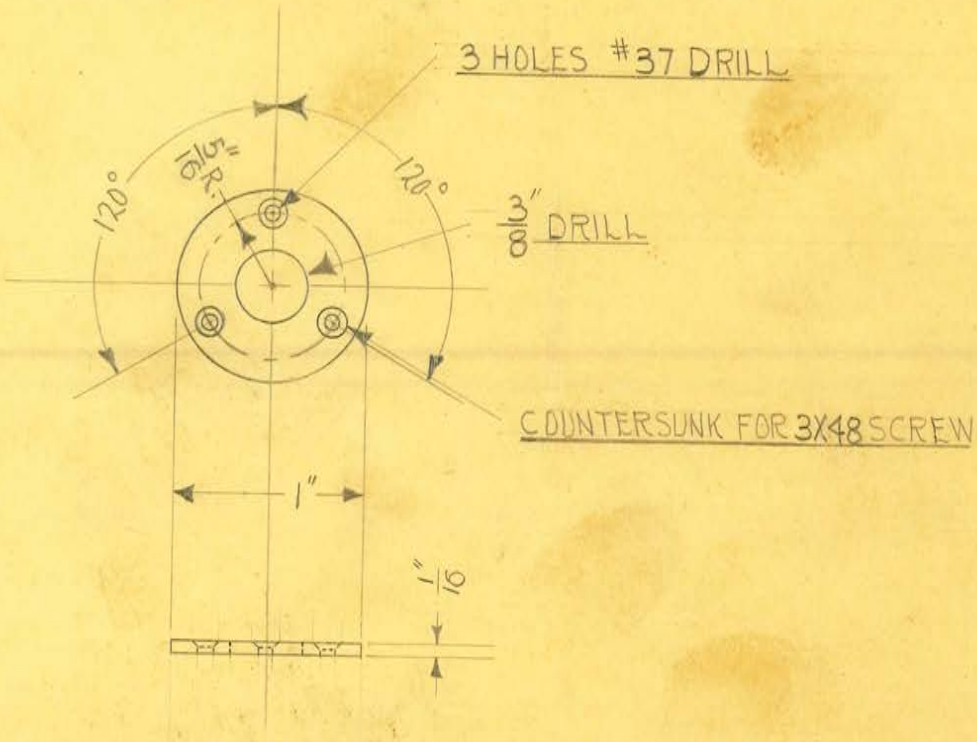


1 REQUIRED

OBSOLETE

| | | | |
|---|---|---|---|
| SIZE | 1" ROD C.R.S. | ISSUE 5-9-35 | J.W. |
| KIND | | CHANGED | |
| SHAPE | | " | |
| FINISH | CAD. #23 | " | |
| TEMP. | | " | |
| PATT. | | " | |

**TITLE:** SHOCKPROOF DENTAL X HORIZONTAL ADJUST. WASHER

H. G. FISCHER & CO.
2335 WABANSIA AVE.
CHICAGO, ILL.

CAT. NO.

PART NO. 9524

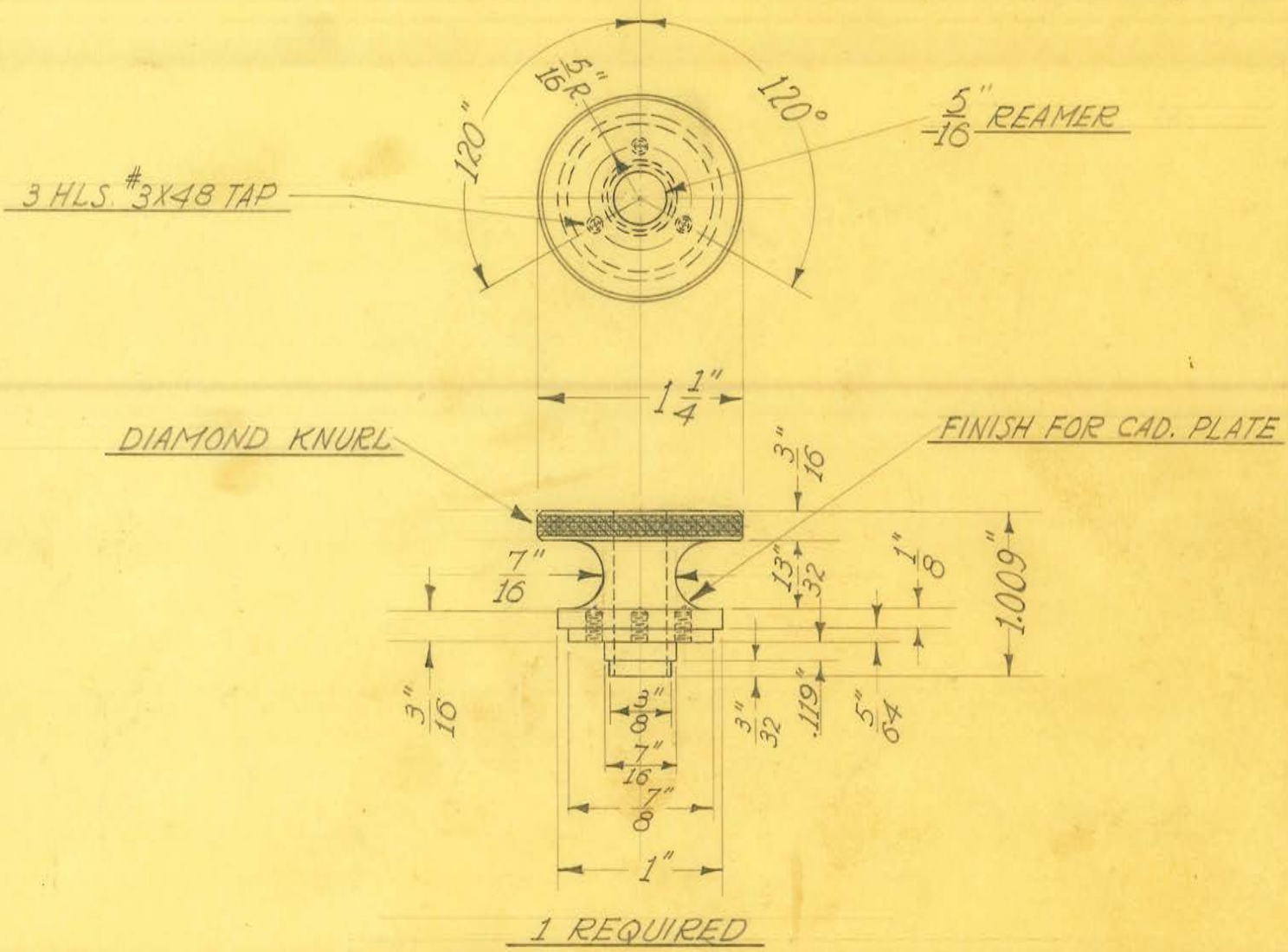


1 REQUIRED

OBSOLETE

| | | | |
|---|---|---|---|
| SIZE | 1 1/4" COLD ROLL. | ISSUE 11-20-36 | J.W. |
| KIND | STEEL ROD | CHANGED | |
| SHAPE | | " | |
| FINISH | CHROME-#2 | " | |
| TEMP. | | " | |
| PATT. | | " | |

**TITLE:** SHOCKPROOF DENTAL X HORIZONTAL ADJUSTMENT ROLLER

H. G. FISCHER & CO.
2335 WABANSIA AVE.
CHICAGO, ILL.

CAT. NO.

PART NO. 9525

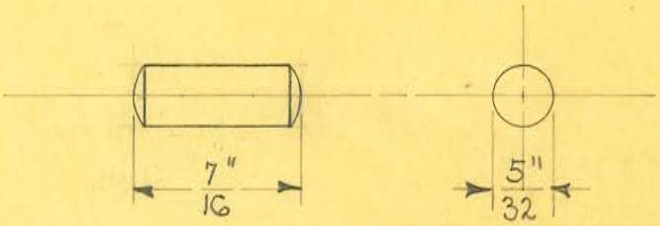


4 REQUIRED

SCALE ~ 2 DIAMETERS

OBSOLETE

| | | | |
|---|---|---|---|
| SIZE | 5/32" DIAM. | ISSUE 5-20-35 | A.E. |
| KIND | C.R. STEEL | CHANGED | |
| SHAPE | | " | |
| FINISH | CHROME #2 1 END ONLY | " | |
| TEMP. | | " | |
| PATT. | | " | |

**TITLE:** SHOCKPROOF DENTAL "X" TUBE HEAD SUPP. ARM DOWELL PIN

| | | |
|---|---|---|
| H. G. FISCHER & CO. 2335 WABANSIA AVE. CHICAGO, ILL. | CAT. NO. | PART NO. 9526 |

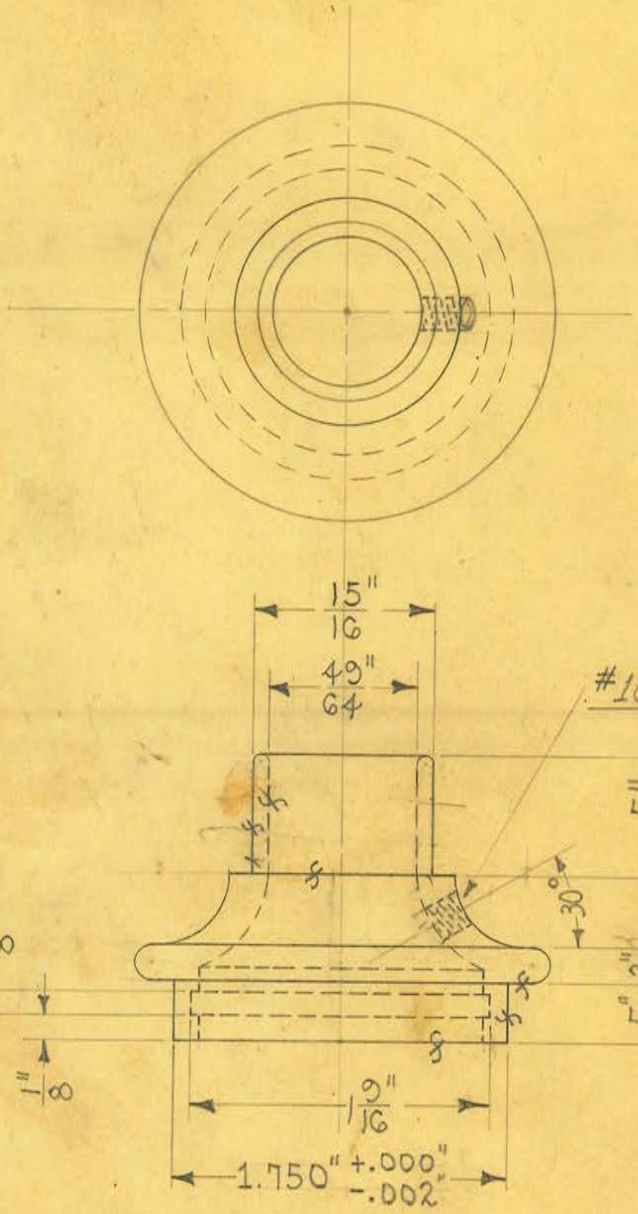


2 REQUIRED

OBSOLETE

| | | | |
|---|---|---|---|
| SIZE | | ISSUE 4-24-35 | J.E. |
| KIND | ALUM. CASTING | CHANGED 8-20-36 | J.W. |
| SHAPE | | " | |
| FINISH | | " | |
| TEMP. | | " | |
| PATT. | 8066-827 | " | |

**TITLE:** SHOCKPROOF DENTAL "X" TRANSFORMER STRESS CONE CAP

| | | |
|---|---|---|
| H. G. FISCHER & CO. 2335 WABANSIA AVE. CHICAGO, ILL. | CAT. NO. | PART NO. 9529FA |

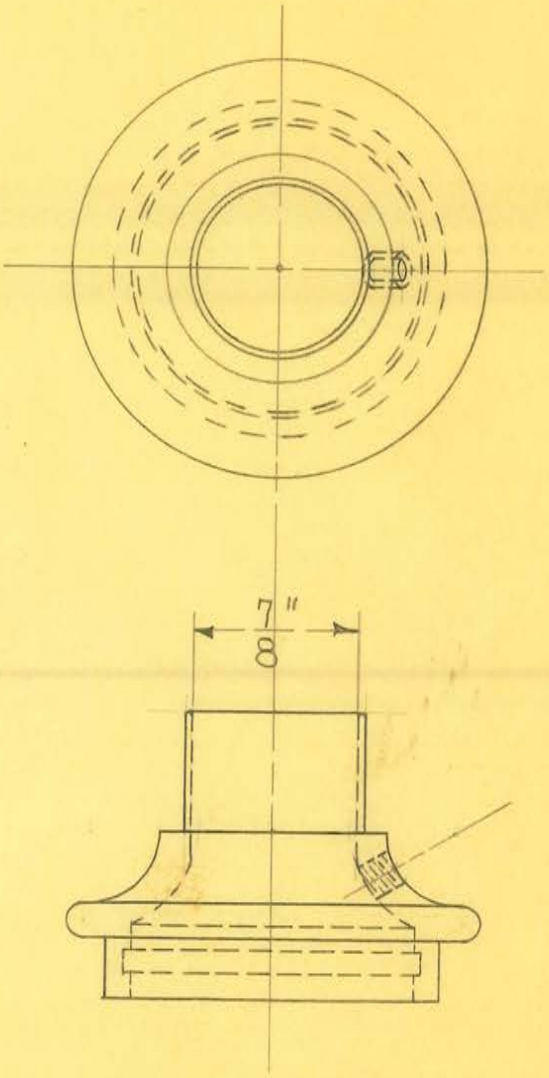


2 REQUIRED

OBSOLETE

| | | | |
|---|---|---|---|
| SIZE | FROM 9529FA | ISSUE 5-18-43 | HE. |
| KIND | | CHANGED | |
| SHAPE | | " | |
| FINISH | | " | |
| TEMP. | | " | |
| PATT. | | " | |

**TITLE:** FISCHER SHOCKPROOF DENTAL "X" RAY TRANSF. STRESS CONE CAP (FOR OVERSIZE CABLE)

H. G. FISCHER & CO.
2335 WABANSIA AVE.
CHICAGO, ILL.

CAT. NO.

PART NO. 9529 1/2

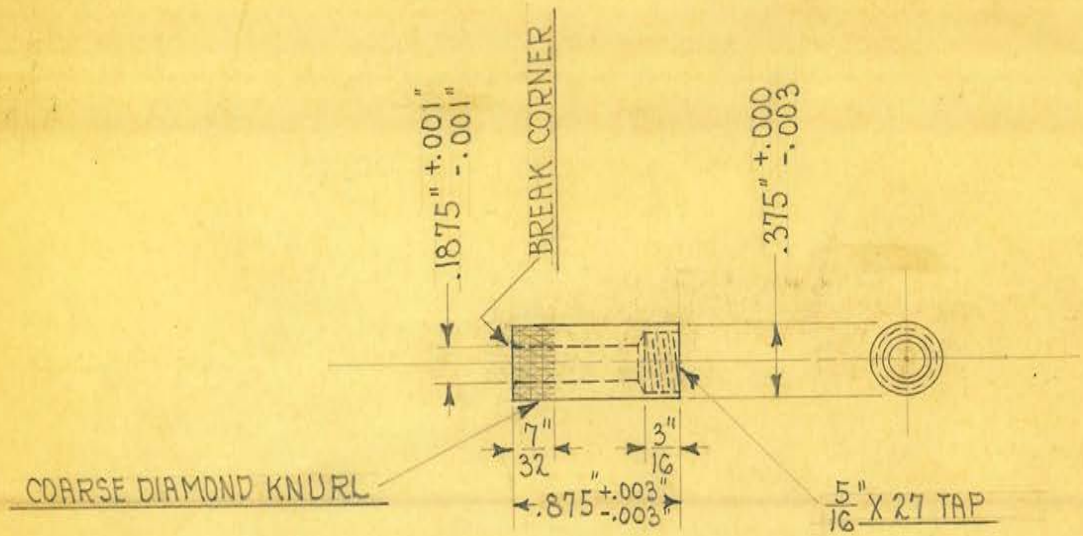


2 REQUIRED

OBSOLETE

| | | | |
|---|---|---|---|
| SIZE | 3/8" | ISSUE 5-24-35 | J.E. |
| KIND | BRASS ROD | CHANGED | |
| SHAPE | | " | |
| FINISH | | " | |
| TEMP. | | " | |
| PATT. | | " | |

**TITLE:** SHOCKPROOF DENTAL "X" CATHODE CONNECTION SUPPORT INSERT

OBSOLETE

H. G. FISCHER & CO.
2335 WABANSIA AVE.
CHICAGO, ILL.

CAT. NO.

PART NO. 9530

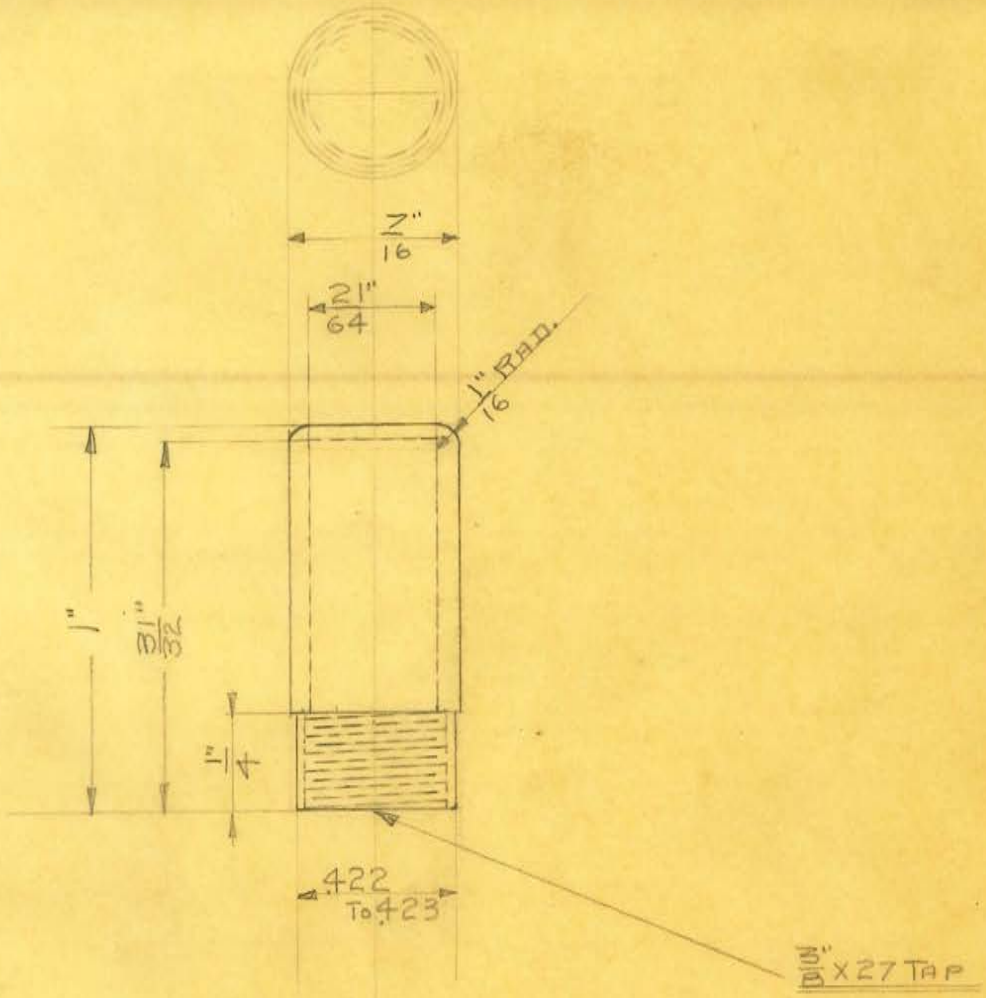


2 REQUIRED SCALE 1" = 1/2"

OBSOLETE

| | | | | |
|---|---|---|---|---|
| SIZE | 7/16" DIAM. | ISSUE 12-30-35 | HHH. | TITLE: SHOCKPROOF DENTAL X CATHODE CONNECTION SUPPORT INSERT |
| KIND | BRASS ROD | CHANGED | | |
| SHAPE | | " | | |
| FINISH | | " | | |
| TEMP. | | " | | |
| PATT. | | " | | |

H. G. FISCHER & CO.
2335 WABANSIA AVE.
CHICAGO, ILL.

CAT. NO.

PART NO. 9530A

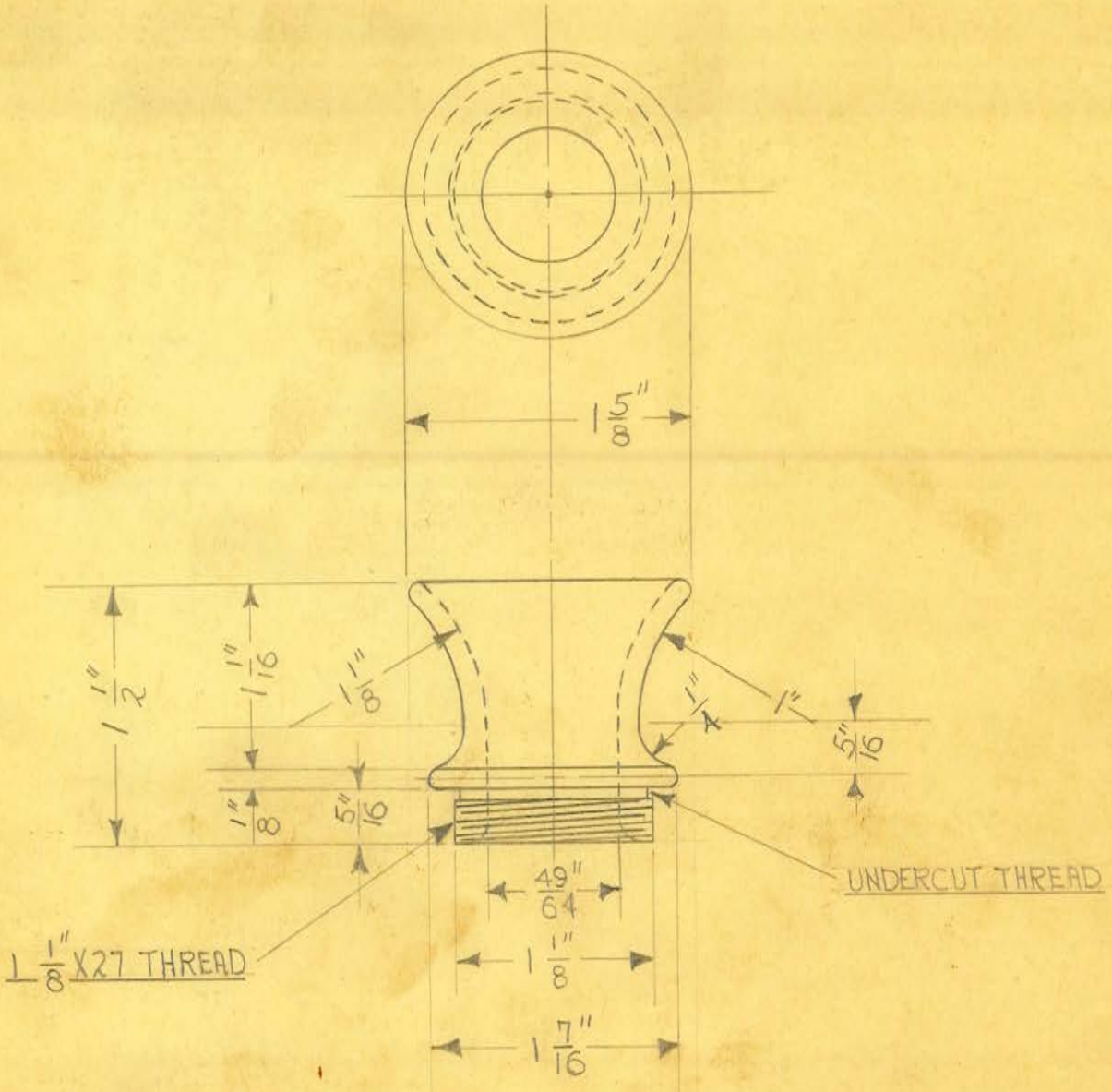


OBSOLETE

2 REQUIRED

| | | | |
|---|---|---|---|
| SIZE | 1 5/8" ALUM. ROD | ISSUE 5-8-35. | J.W. |
| KIND | | CHANGED | |
| SHAPE | | " | |
| FINISH | POL. & BUFF. | " | |
| TEMP. | | " | |
| PATT. | | " | |

**TITLE:** SHOCKPROOF DENTAL X TUBE HEAD CABLE SUPP. BUSHING

H. G. FISCHER & CO.
2335 WABANSIA AVE.
CHICAGO, ILL.

CAT. NO.

PART NO. 9531

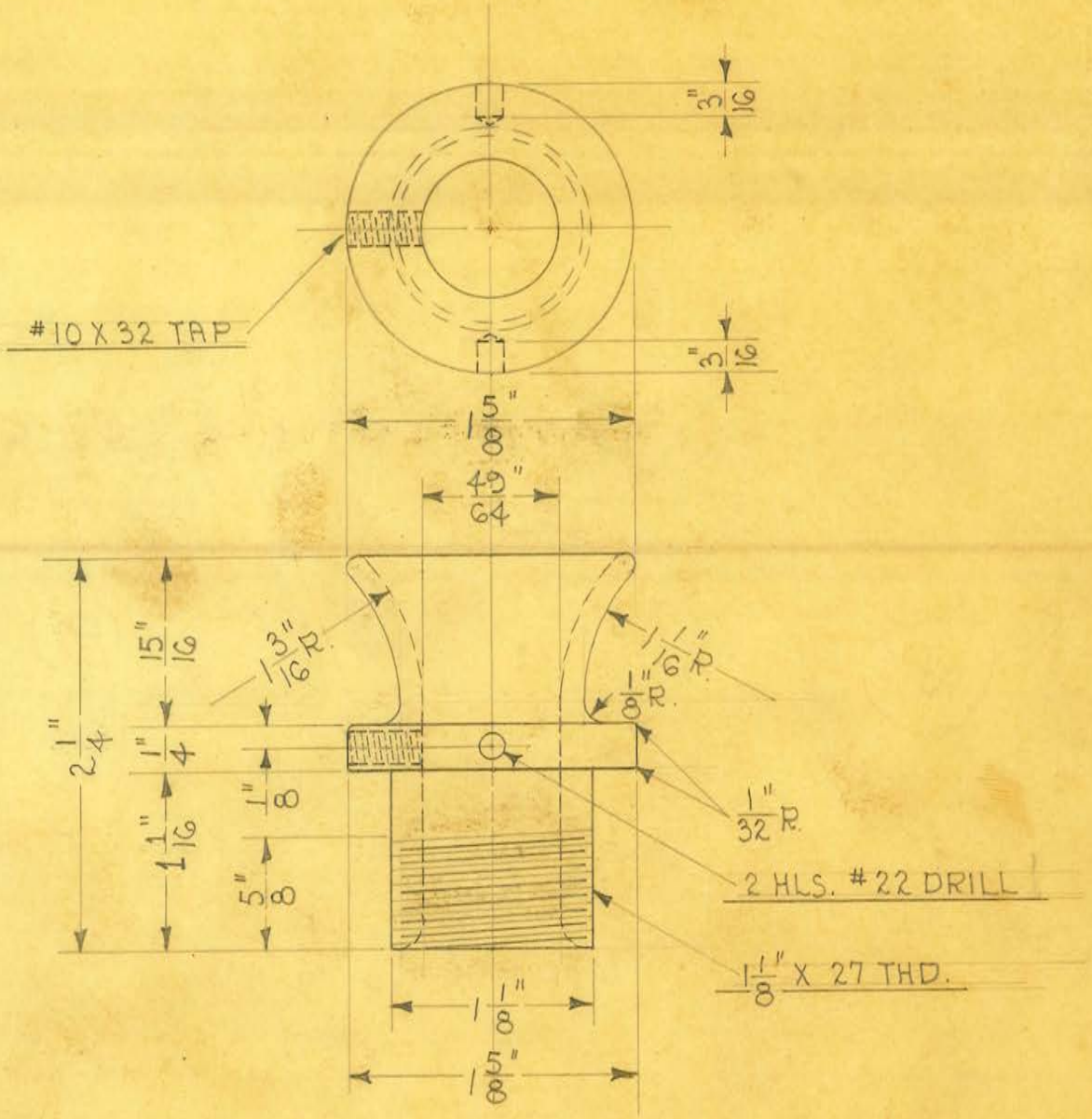


2 REQUIRED

OBSOLETE

| | | | |
|---|---|---|---|
| SIZE | 1 5/8" | ISSUE 7-10-36 | A.E. |
| KIND | ALUM. ROD | CHANGED | |
| SHAPE | | " | |
| FINISH | POL. & BUFF | " | |
| TEMP. | | " | |
| PATT. | | " | |

**TITLE:** SHOCKPROOF DENTAL "X" TUBE HEAD CABLE SUPPORT BUSHING

H. G. FISCHER & CO.
2335 WABANSIA AVE.
CHICAGO, ILL.

CAT. NO.

PART NO. 9531A

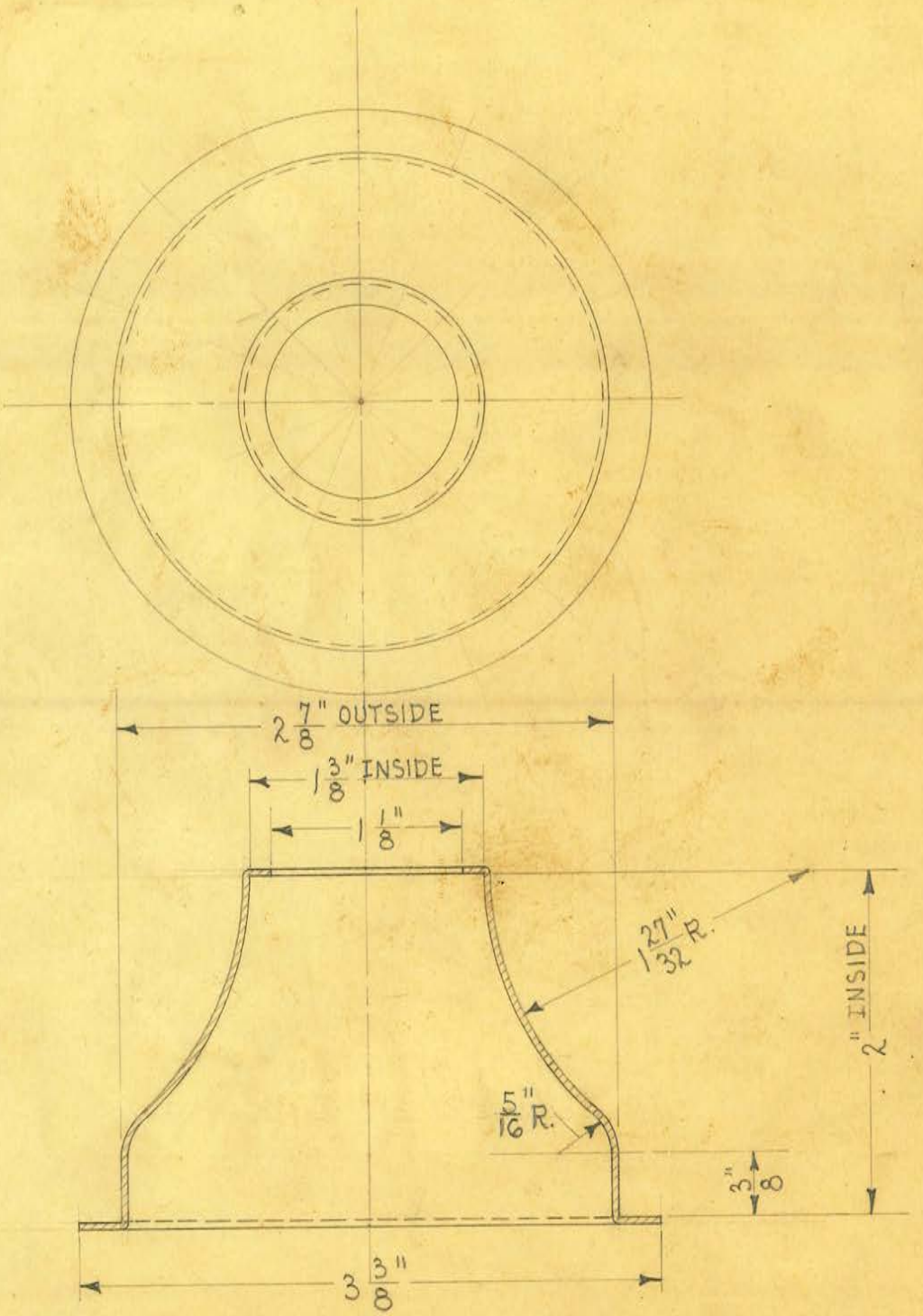


OBSOLETE

| | | | |
|---|---|---|---|
| SIZE | 1/32" | ISSUE 4-5-35 | A.E. |
| KIND | SHEET BRASS | CHANGED | |
| SHAPE | | " | |
| FINISH | | " | |
| TEMP. | | " | |
| PATT. | | " | |

**TITLE:** SHOCKPROOF DENTAL "X" TUBE HEAD
H.T. CABLE INSULATOR CAP

H. G. FISCHER & CO.
2335 WABANSIA AVE.
CHICAGO, ILL

CAT. NO.

PART NO. 9532

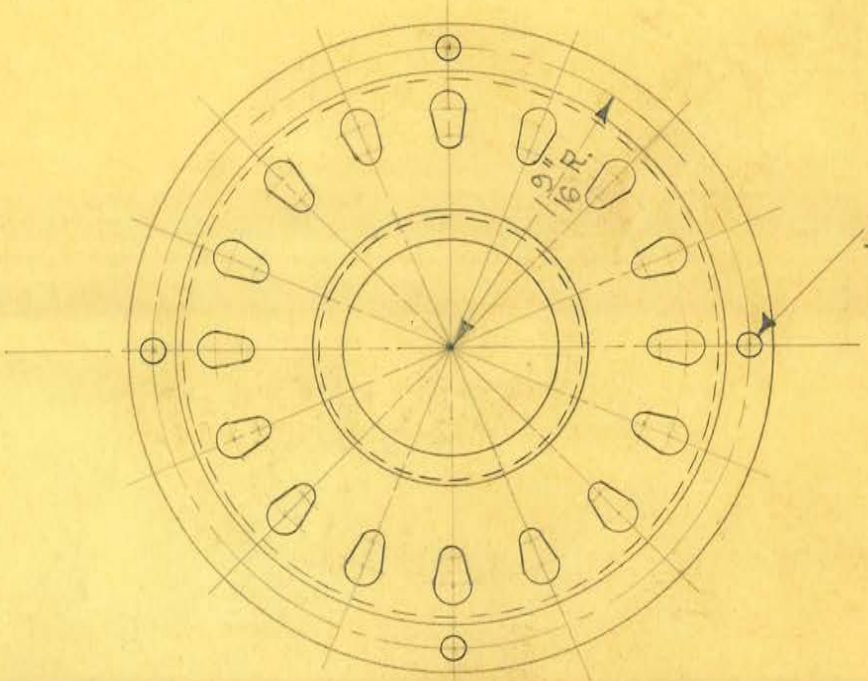


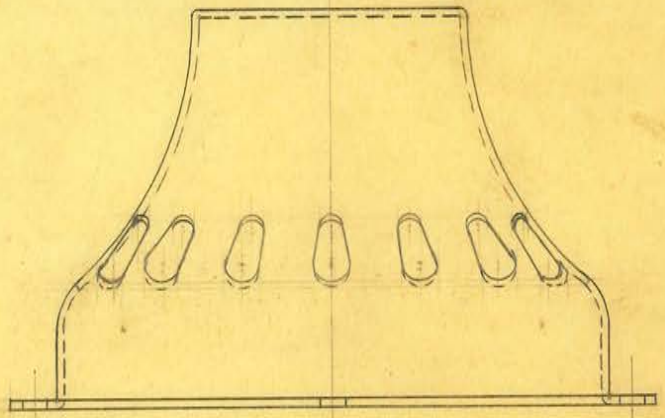

2 REQUIRED

OBSOLETE

| | | | |
|---|---|---|---|
| SIZE | | ISSUE 5-22-35 | A.E. |
| KIND | | CHANGED | |
| SHAPE | | " | |
| FINISH | CHROME #2 | " | |
| TEMP. | | " | |
| PATT. | | " | |

**TITLE:** SHOCKPROOF DENTAL "X" TUBE HEAD
H.T. CABLE INSULATOR CAP - DRILLED

H. G. FISCHER & CO.
2335 WABANSIA AVE.
CHICAGO, ILL.

CAT. NO.

PART NO. 9532F

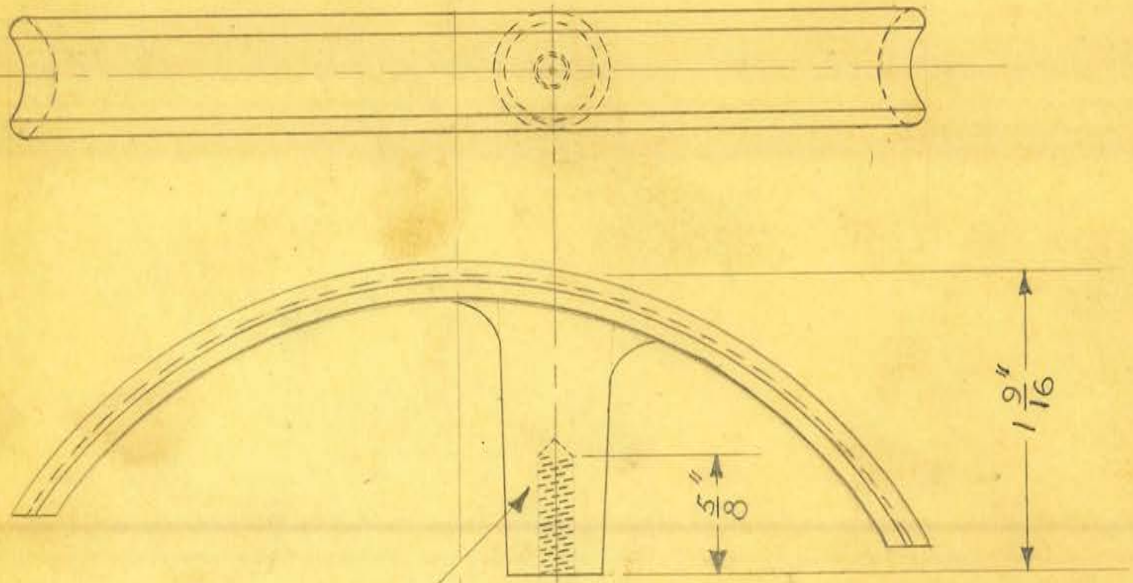


10X32 TAP

2 REQUIRED

OBSOLETE

| | | | |
|---|---|---|---|
| SIZE | | ISSUE 5-1-35 | J.W. |
| KIND | ALUM. CASTING | CHANGED | |
| SHAPE | | " | |
| FINISH | ST. BLACK #80 | " | |
| TEMP. | | " | |
| PATT. | 7981-822 | " | |

**TITLE:** SHOCKPROOF DENTAL X CONTROL BOX CABLE SUPPORT

H. G. FISCHER & CO.
2335 WABANSIA AVE.
CHICAGO, ILL.

CAT. NO.

PART NO. 9533F

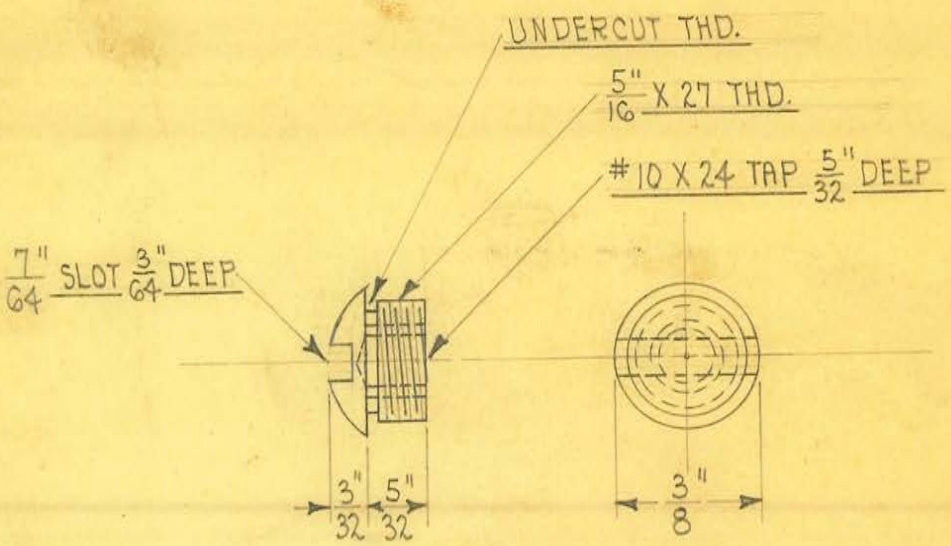


2 REQUIRED

SCALE ~ 2 DIAMETERS

OBSOLETE

| | | | |
|---|---|---|---|
| SIZE | 3/8" | ISSUE 5-24-35 | J.E. |
| KIND | BRASS ROD | CHANGED | |
| SHAPE | | " | |
| FINISH | | " | |
| TEMP. | | " | |
| PATT. | | " | |

**TITLE:** SHOCKPROOF DENTAL "X" CATHODE CONNECTION CAP

OBSOLETE

H. G. FISCHER & CO.
2335 WABANSIA AVE.
CHICAGO, ILL.

CAT. NO.

PART NO. 9534

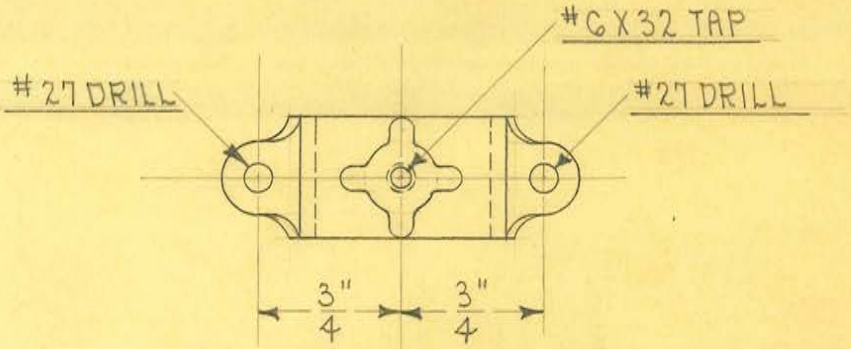


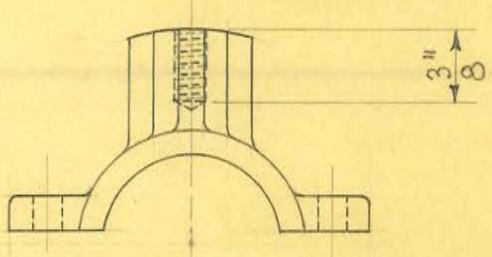


2 REQUIRED

OBSOLETE

| | | | | |
|---|---|---|---|---|
| SIZE | | ISSUE 4-18-35 | A.E. | **TITLE:** SHOCKPROOF DENTAL "X" TRANS. STRESS CONE CLAMP - UPPER |
| KIND | ALUM. CASTING | CHANGED | | |
| SHAPE | | " | | |
| FINISH | BLACK #80 | " | | |
| TEMP. | | " | | |
| PATT. | 8035-825 | " | | |

H. G. FISCHER & CO.
2335 WABANSIA AVE.
CHICAGO, ILL

CAT. NO.

PART NO. 9540F

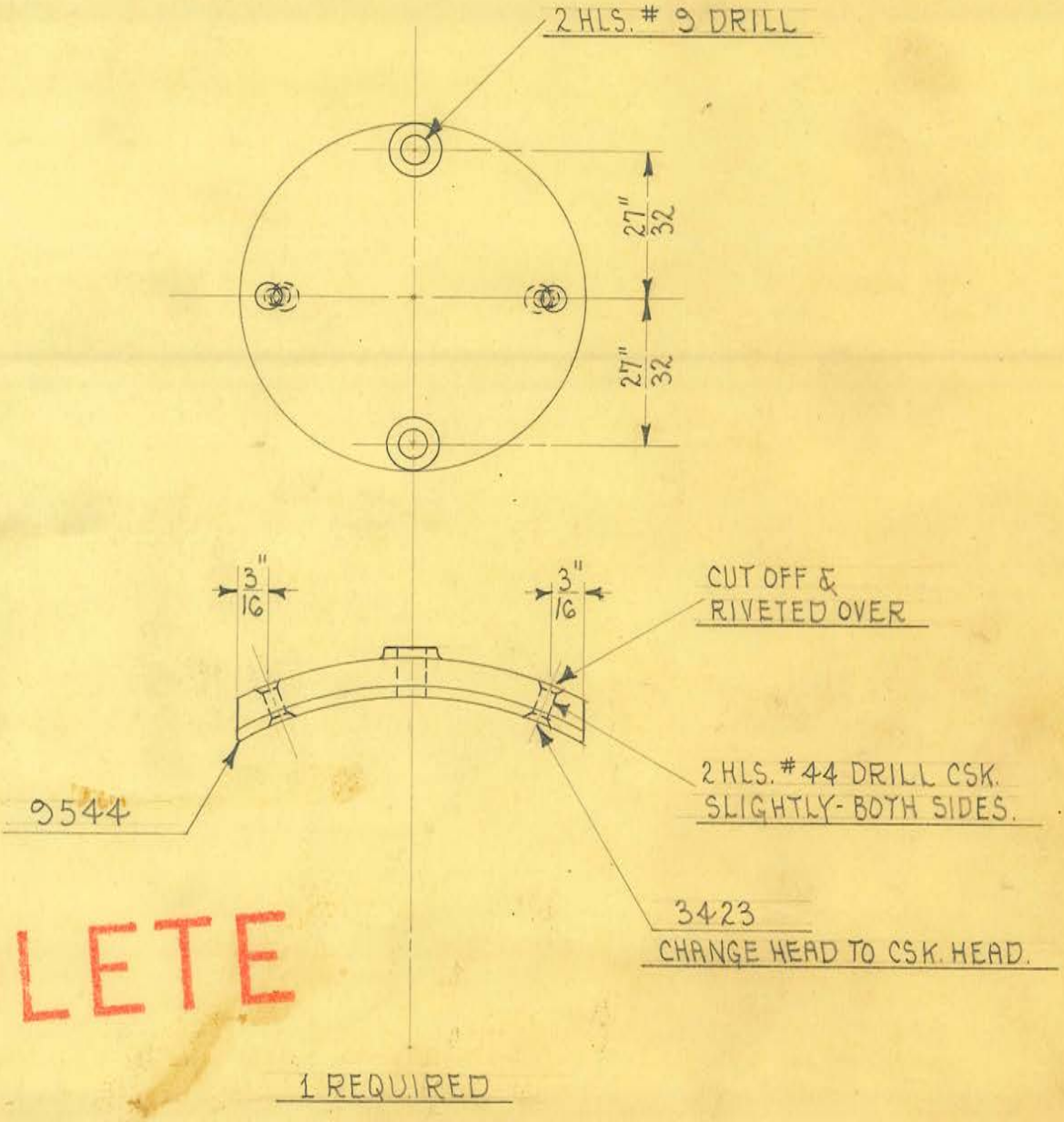


OBSOLETE

1 REQUIRED

| | | | | |
|---|---|---|---|---|
| SIZE | | ISSUE 4-19-35 | A.E. | **TITLE:** SHOCKPROOF DENTAL "X" X-RAY TUBE HOLDER UPPER CLAMP CAP |
| KIND | ALUM. CASTING | CHANGED 8-5-36 | A.E. | |
| SHAPE | | " | | |
| FINISH | BLACK #80 | " | | |
| TEMP. | | " | | |
| PATT. | 7755-813C | " | | |

| | | |
|---|---|---|
| H. G. FISCHER & CO. 2335 WABANSIA AVE. CHICAGO, ILL | CAT. NO. | PART NO. 9543GA |

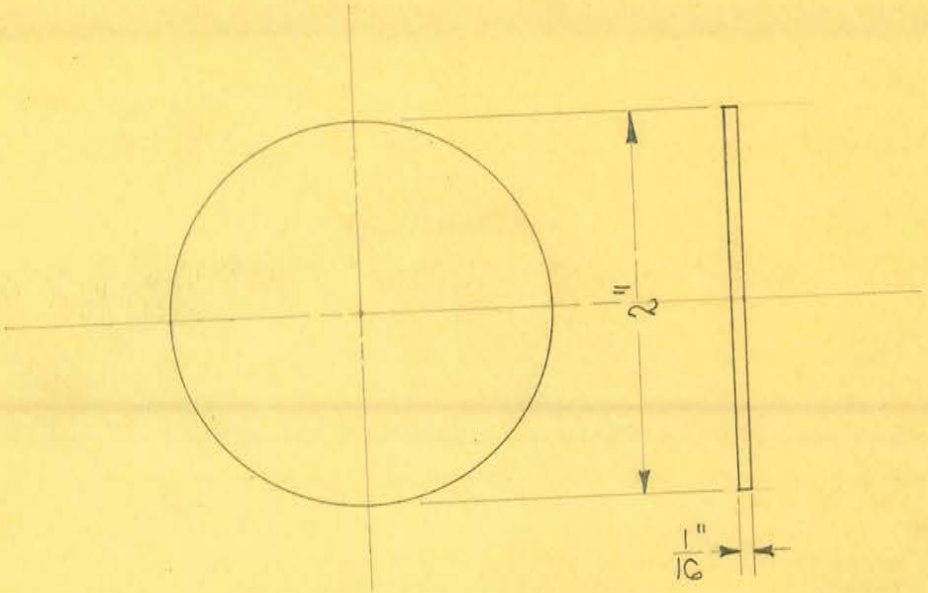


1 REQUIRED

OBSOLETE

| | | | |
|---|---|---|---|
| SIZE | 1/16" SHEET | ISSUE 5-21-35 | A.E. |
| KIND | LEAD | CHANGED | |
| SHAPE | | " | |
| FINISH | | " | |
| TEMP. | | " | |
| PATT. | | " | |

TITLE: SHOCKPROOF DENTAL "X" X-RAY TUBE HOLDER
UPPER CLAMP CAP LEAD DISC

H. G. FISCHER & CO.
2335 WABANSIA AVE.
CHICAGO, ILL.

CAT. NO.

PART NO. 9544

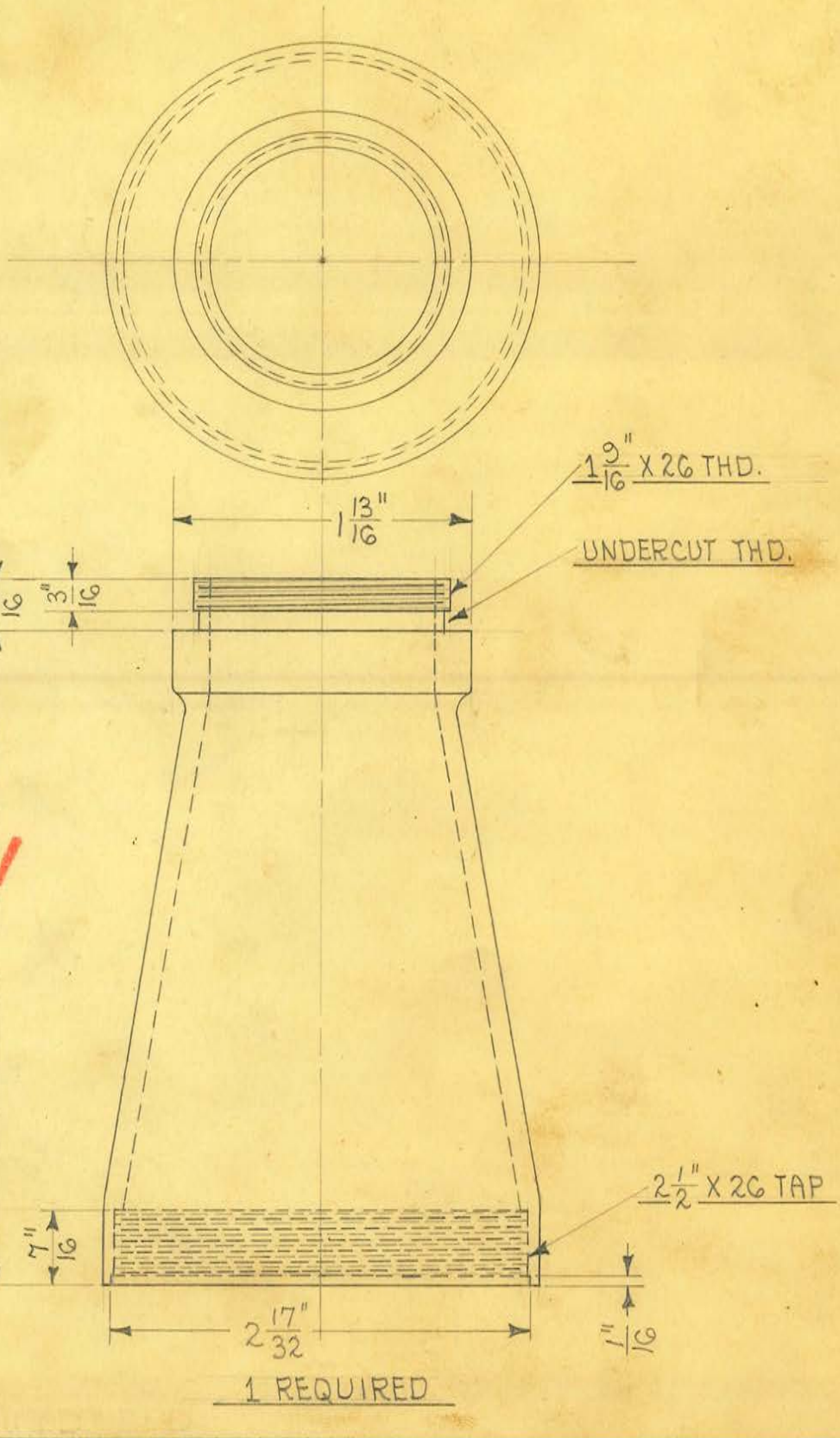


OBSOLETE

1 REQUIRED

| | | | |
|---|---|---|---|
| SIZE | #12 ALUMINUM | ISSUE 4-19-35 | A.E. |
| KIND | CASTING | CHANGED | |
| SHAPE | | " | |
| FINISH | POL. & BUFF | " | |
| TEMP. | | " | |
| PATT. | 7955-817 | " | |

**TITLE:** SHOCKPROOF DENTAL "X" DENTAL CONE HOLDER

H. G. FISCHER & CO.
2335 WABANSIA AVE.
CHICAGO, ILL

CAT. NO. 3920

PART NO. 9545F

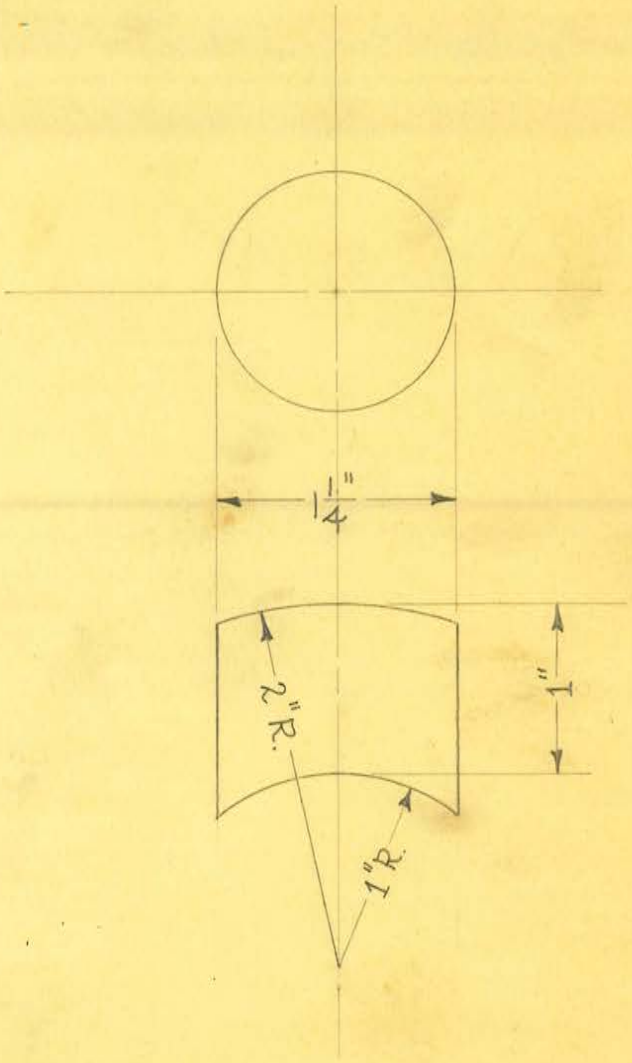


1 REQUIRED
FROM 9548

OBSOLETE

| | | | |
|---|---|---|---|
| SIZE | | ISSUE 4-18-35 | A.E. |
| KIND | | CHANGED | |
| SHAPE | | " | |
| FINISH | | " | |
| TEMP. | | " | |
| PATT. | | " | |

**TITLE:** SHOCKPROOF DENTAL "X" TUBE HOLDER
UPPER CLAMP CORK

H. G. FISCHER & CO.
2335 WABANSIA AVE.
CHICAGO, ILL

CAT. NO.

PART NO. 9548F

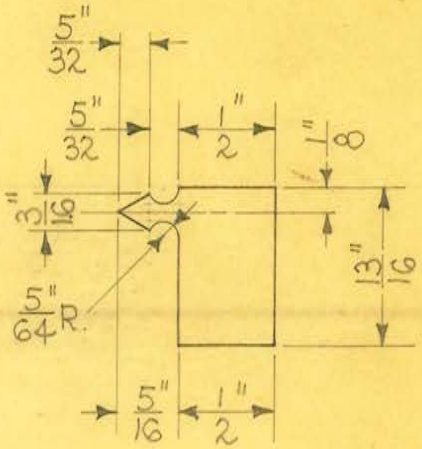


MATERIAL

#20 B. & S. GAUGE (.0319") HALF HARD SHEET BRASS

OBSOLETE

| | | | |
|---|---|---|---|
| SIZE | | ISSUE 8-11-36 | A.E. |
| KIND | | CHANGED | |
| SHAPE | | " | |
| FINISH | | " | |
| TEMP. | | " | |
| PATT. | | " | |

**TITLE:** SHOCKPROOF DENTAL "X" TUBE HOUSING
DEGREE INDICATOR - BLANK

H. G. FISCHER & CO.
2338 WABANSIA AVE.
CHICAGO, ILL.

CAT. NO.

PART NO. 9552

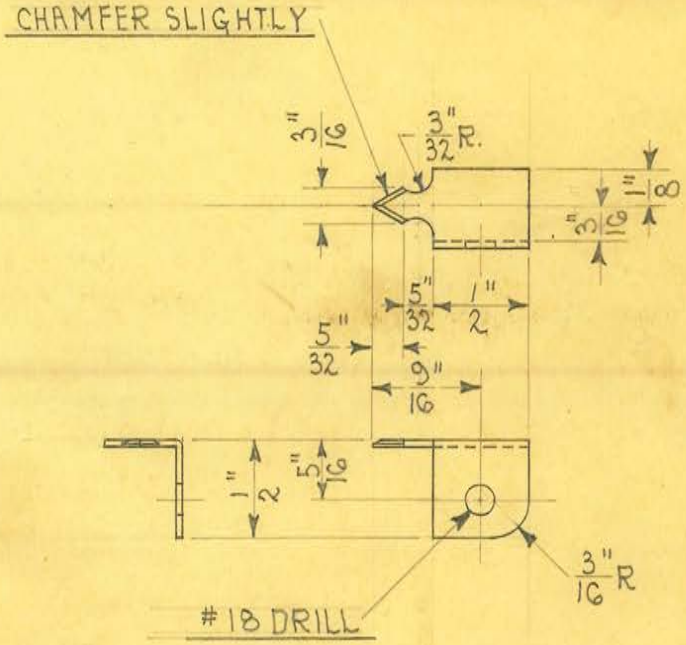


1 REQUIRED

OBSOLETE

| | | | |
|---|---|---|---|
| SIZE | | ISSUE 5-22-35 | J.H.C. |
| KIND | | CHANGED | |
| SHAPE | | " | |
| FINISH | RED #87 | " | |
| TEMP. | | " | |
| PATT. | | " | |

**TITLE:** SHOCKPROOF DENTAL "X" TUBE HOUSING DEGREE INDICATOR

H. G. FISCHER & CO.
2335 WABANSIA AVE.
CHICAGO, ILL.

CAT. NO.

PART NO. 9552F

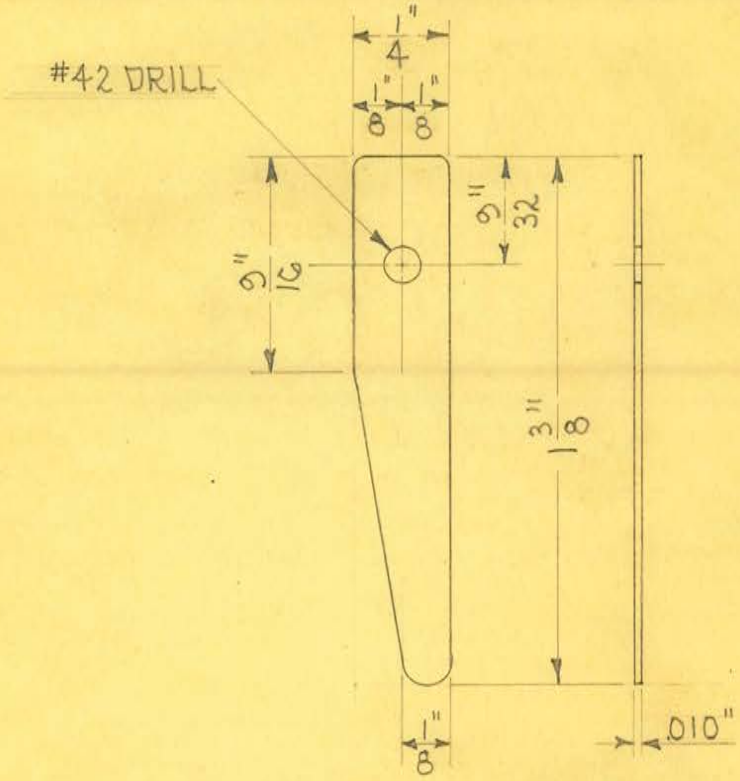


2 REQUIRED

SCALE ~ 1" = 1/2"

OBSOLETE

| | | | |
|---|---|---|---|
| SIZE | .010" SHEET | ISSUE 4-22-35 | H.E. |
| KIND | PHOS. BRONZE | CHANGED | |
| SHAPE | | " | |
| FINISH | | " | |
| TEMP. | | " | |
| PATT. | | " | |

**TITLE:** SHOCKPROOF DENTAL "X" X-RAY TUBE HOLDER
GROUND STRIP - BLANK

H. G. FISCHER & CO.
2335 WABANSIA AVE.
CHICAGO, ILL.

CAT. NO.

PART NO. 9554

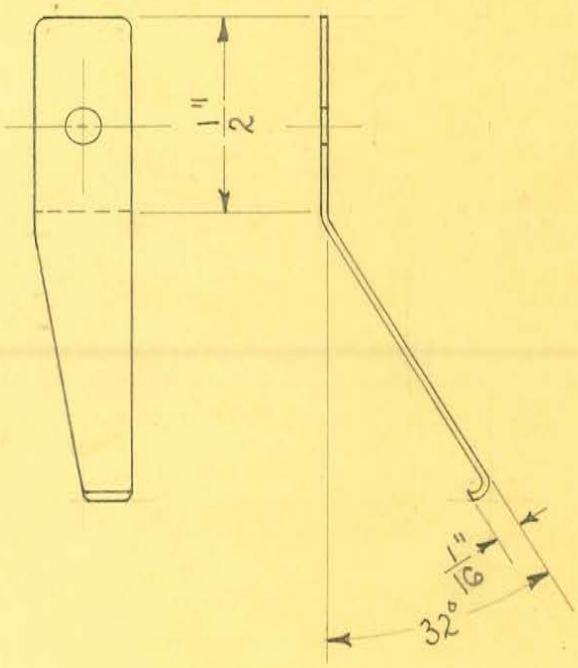


1 REQUIRED

SCALE ~ 1" = 1/2"

OBSOLETE

| | | | | | |
|---|---|---|---|---|---|
| SIZE | | ISSUE 4-22-35 | A.E. | TITLE: SHOCKPROOF DENTAL "X" X-RAY TUBE HOLDER GROUND SPRING - RIGHT | |
| KIND | | CHANGED | | | |
| SHAPE | | " | | | |
| FINISH | | " | | | |
| TEMP. | | " | | H. G. FISCHER & CO. 2335 WABANSIA AVE. CHICAGO, ILL | CAT. NO. |
| PATT. | | " | | | PART NO. 9554F |

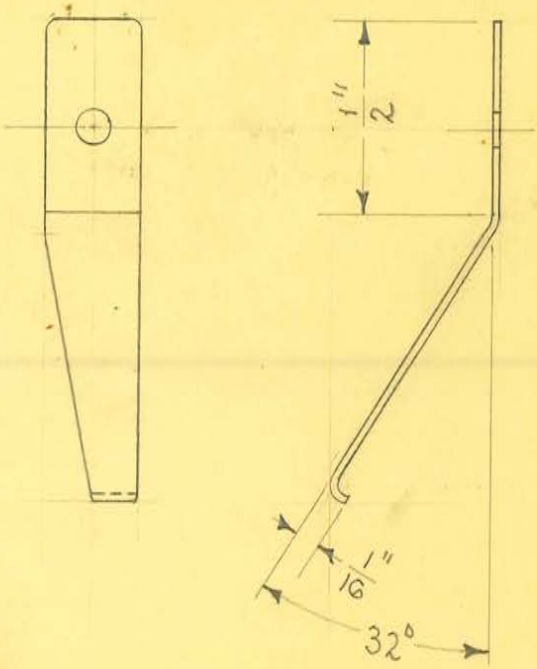


1 REQUIRED

SCALE ~ 1" = 1/2"

OBSOLETE

| | | | | |
|---|---|---|---|---|
| SIZE | | ISSUE 4-22-35 | A.E. | **TITLE:** SHOCKPROOF DENTAL "X" X-RAY TUBE HOLDER GROUND SPRING - LEFT |
| KIND | | CHANGED | | |
| SHAPE | | " | | |
| FINISH | | " | | |
| TEMP. | | " | | |
| PATT. | | " | | |

H. G. FISCHER & CO.
2335 WABANSIA AVE.
CHICAGO, ILL

CAT. NO.

PART NO. 9555

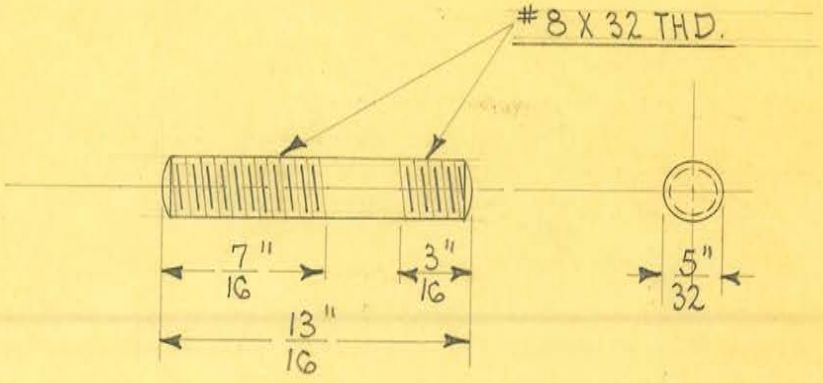


2 REQUIRED

SCALE ~ 2 DIAMETERS

OBSOLETE

| | | | |
|---|---|---|---|
| SIZE | 5/32" DIAM. | ISSUE 5-20-35 | A.E. |
| KIND | BRASS ROD | CHANGED | |
| SHAPE | | " | |
| FINISH | | " | |
| TEMP. | | " | |
| PATT. | | " | |

**TITLE:** SHOCKPROOF DENTAL "X" TUBE HOLDER
UPPER CLAMP CAP STUD

H. G. FISCHER & CO.
2335 WABANSIA AVE.
CHICAGO, ILL.

CAT. NO.

PART NO. 9556

69

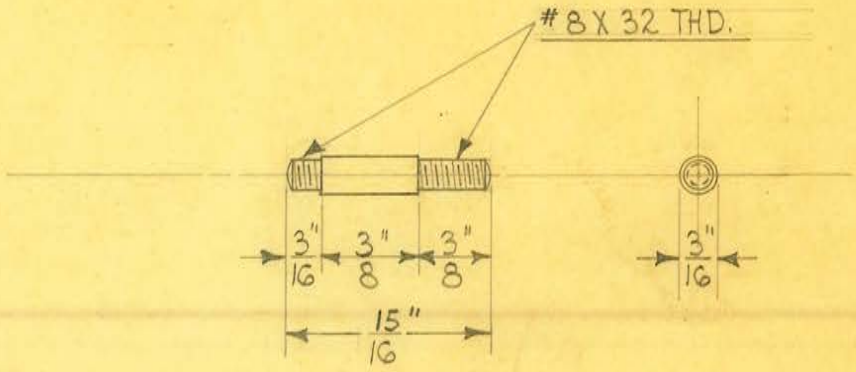


2 REQUIRED

OBSOLETE

| | | | |
|---|---|---|---|
| SIZE | 3/16" DIA. | ISSUE 8-4-36 | A.E. |
| KIND | BRASS ROD | CHANGED | |
| SHAPE | | " | |
| FINISH | CAD. #23 | " | |
| TEMP. | | " | |
| PATT. | | " | |

**TITLE:** SHOCKPROOF DENTAL "X" TUBE HOLDER
UPPER CLAMP CAP STUD

| | | |
|---|---|---|
| H. G. FISCHER & CO. 2338 WABANSIA AVE. CHICAGO, ILL. | CAT. NO. | PART NO. 955GA |

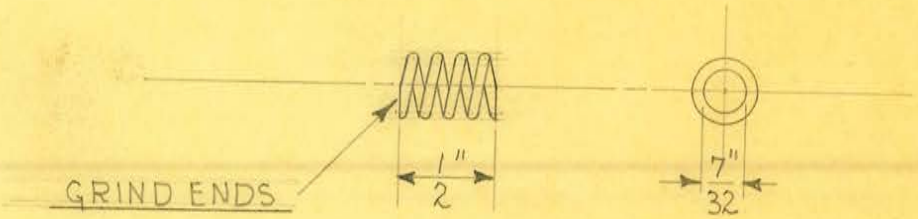


4 TURNS
2 REQUIRED

OBSOLETE

| | | | |
|---|---|---|---|
| SIZE | .060" | ISSUE 8-4-36 | H.E. |
| KIND | MUSIC WIRE | CHANGED | |
| SHAPE | | " | |
| FINISH | | " | |
| TEMP. | | " | |
| PATT. | | " | |

**TITLE:** SHOCKPROOF DENTAL "X" TUBE HOLDER CLAMP SPRING

H. G. FISCHER & CO.
2335 WABANSIA AVE.
CHICAGO, ILL.

CAT. NO.

PART NO. 9556 1/2

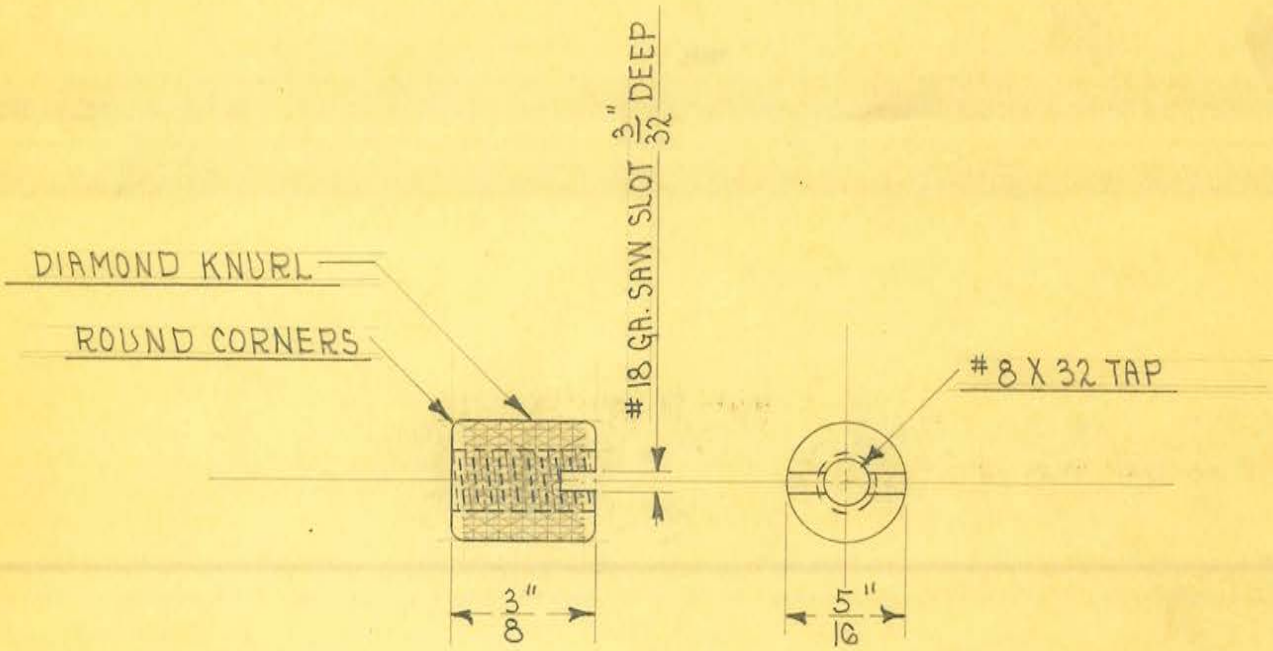


2 REQUIRED

SCALE ~ 2 DIAMETERS

OBSOLETE

| | | | |
|---|---|---|---|
| SIZE | 5/16" DIAM | ISSUE 5-20-35 | A.E. |
| KIND | BRASS ROD | CHANGED | |
| SHAPE | | " | |
| FINISH | CAD. #23 | " | |
| TEMP. | | " | |
| PATT. | | " | |

**TITLE:** SHOCKPROOF DENTAL "X" TUBE HOLDER
UPPER CLAMP THUMB NUT

H. G. FISCHER & CO.
2335 WABANSIA AVE.
CHICAGO, ILL.

CAT. NO.

PART NO. 9557

69

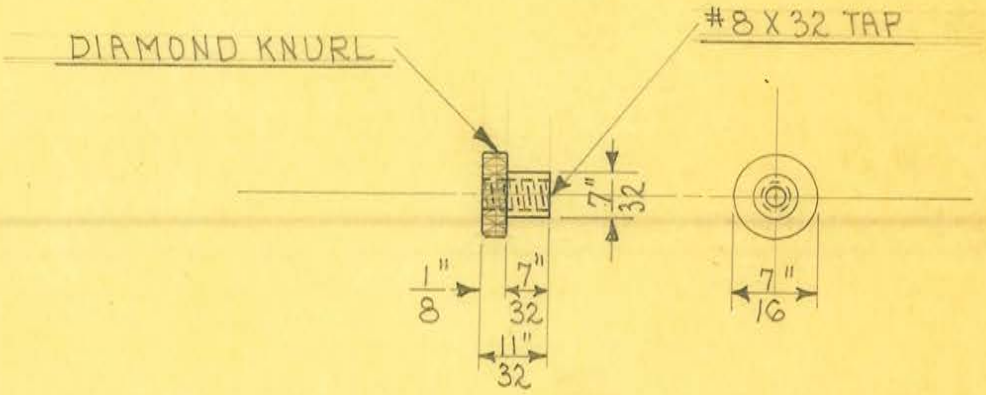


2 REQUIRED

OBSOLETE

| | | | |
|---|---|---|---|
| SIZE | 7/16" DIA. | ISSUE 8-4-36 | A.E. |
| KIND | BRASS ROD | CHANGED | |
| SHAPE | | " | |
| FINISH | CAD. #23 | " | |
| TEMP. | | " | |
| PATT. | | " | |

**TITLE:** SHOCKPROOF DENTAL "X" TUBE HOLDER
UPPER CLAMP THUMB NUT

H. G. FISCHER & CO.
2335 WABANSIA AVE.
CHICAGO, ILL.

CAT. NO.

PART NO. 9557A

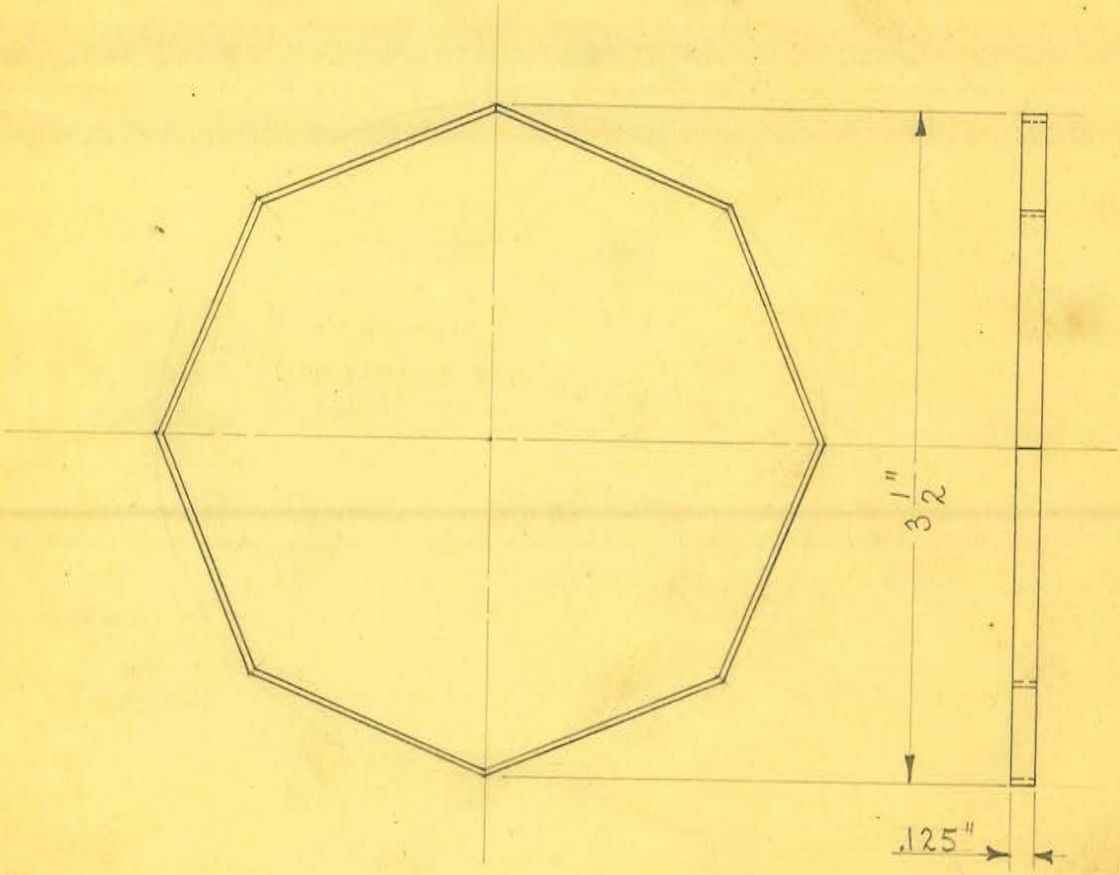


2 REQUIRED

DEVELOPED LENGTH - 10 9/16"

OBSOLETE

| | | | |
|---|---|---|---|
| SIZE | .025" SHEET | ISSUE 4-23-35 | A.E. |
| KIND | PHOS. BRONZE | CHANGED | |
| SHAPE | | " | |
| FINISH | | " | |
| TEMP. | | " | |
| PATT. | | " | |

**TITLE:** SHOCKPROOF DENTAL "X" X-RAY TUBE HOLDER BEARING FRICTION RING

H. G. FISCHER & CO.
2335 WABANSIA AVE.
CHICAGO, ILL.

CAT. NO.

PART NO. 9559

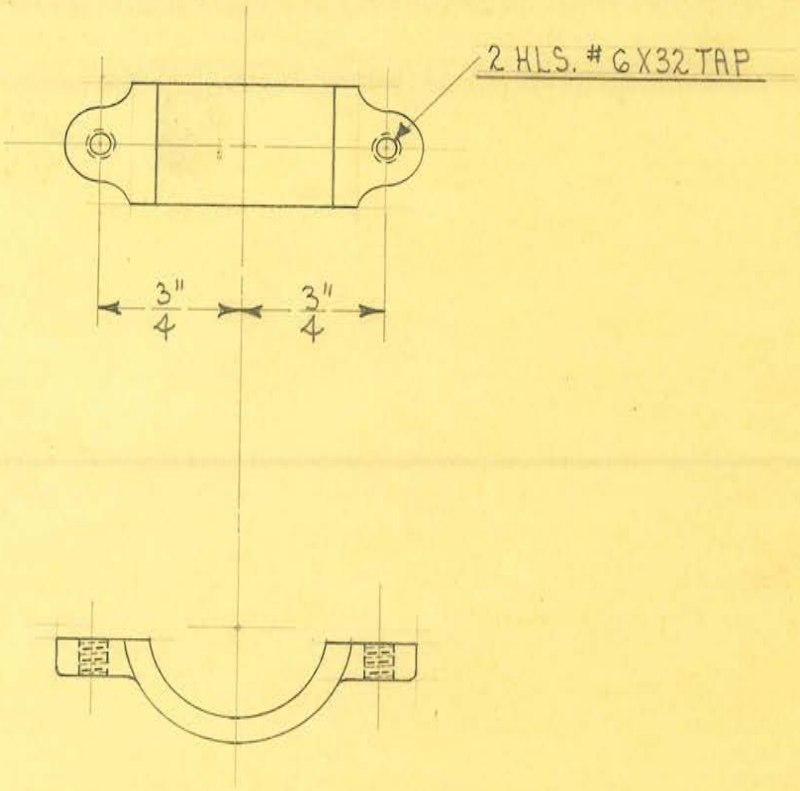


2 REQUIRED

OBSOLETE

| | | | | |
|---|---|---|---|---|
| SIZE | | ISSUE 4-18-35 | A.E. | TITLE: SHOCKPROOF DENTAL "X" TRANS. STRESS CONE CLAMP - LOWER |
| KIND | ALUM. CASTING | CHANGED | | |
| SHAPE | | " | | |
| FINISH | BLACK #80 | " | | |
| TEMP. | | " | | |
| PATT. | 8065-826 | " | | |

H. G. FISCHER & CO.
2335 WABANSIA AVE.
CHICAGO, ILL

CAT. NO.

PART NO. 9539F

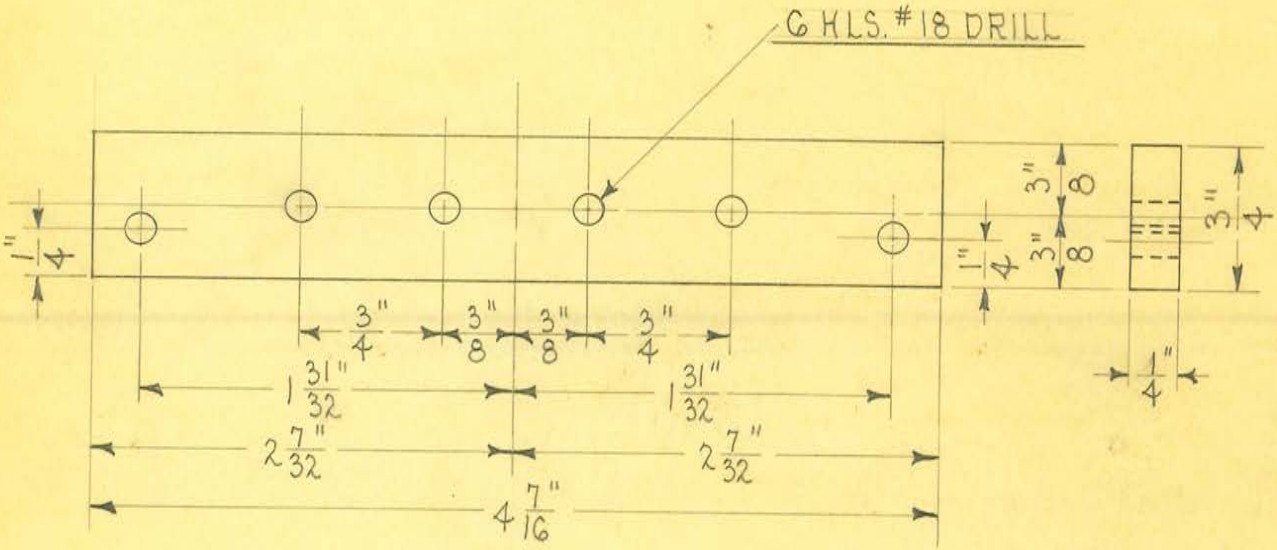


2 REQUIRED

OBSOLETE

| | | | | |
|---|---|---|---|---|
| SIZE | 1/4" SHEET | ISSUE 2-18-35 | A.E. | **TITLE:** MODEL "SW17" SHORT WAVE HIGH FREQ. OUTFIT FILAMENT TRANS. TERM. STRIP - END |
| KIND | RICHELAIN | CHANGED | | |
| SHAPE | BAKELITE | " | | |
| FINISH | | " | | |
| TEMP. | | " | | |
| PATT. | | " | | |

H. G. FISCHER & CO.
2335 WABANSIA AVE.
CHICAGO, ILL

CAT. NO.

PART NO. 9428

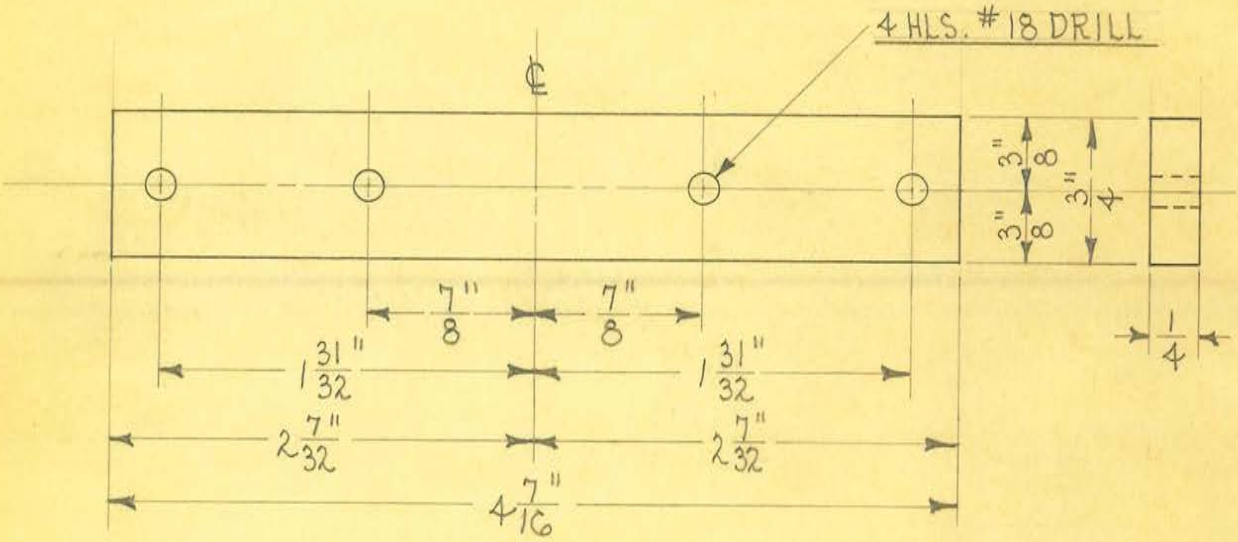


1 REQUIRED

OBSOLETE

| | | | | |
|---|---|---|---|---|
| SIZE | 1/4" SHEET | ISSUE 2-19-35 | A.E. | **TITLE:** MODEL "SW17" SHORT WAVE HIGH FREQ. OUTFIT FILAMENT TRANS. TERM. STRIP - CENTER |
| KIND | RICHELAIN | CHANGED | | |
| SHAPE | (BAKELITE) | " | | |
| FINISH | | " | | |
| TEMP. | | " | | |
| PATT. | | " | | |

H. G. FISCHER & CO.
2335 WABANSIA AVE.
CHICAGO, ILL

CAT. NO.

PART NO. 9429

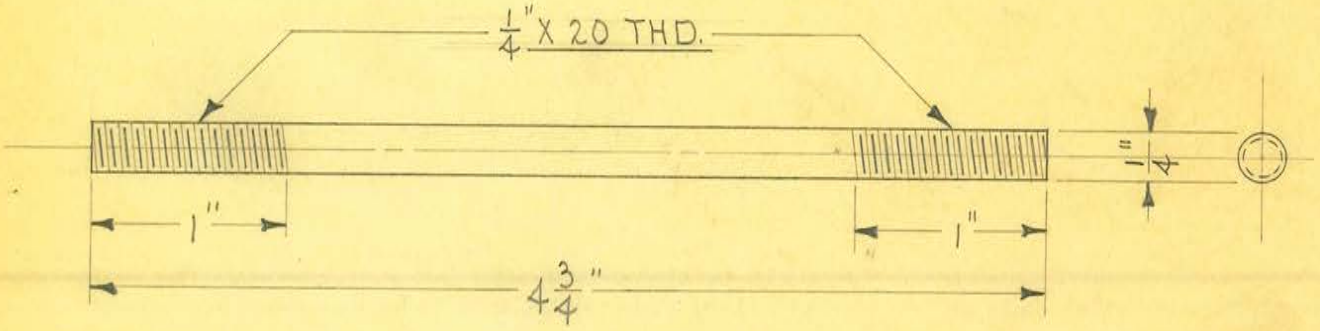


4 REQUIRED

OBSOLETE

| | | | | |
|---|---|---|---|---|
| SIZE | 1/4" | ISSUE 2-19-35 | A.E. | **TITLE:** MODEL "SW17" SHORT WAVE HIGH FREQ. OUTFIT H.T. TRANSFORMER STUD |
| KIND | C.R. STEEL | CHANGED | | |
| SHAPE | | " | | |
| FINISH | | " | | |
| TEMP. | | " | | |
| PATT. | | " | | |

| | | |
|---|---|---|
| H. G. FISCHER & CO. 2335 WABANSIA AVE. CHICAGO, ILL. | CAT. NO. | PART NO. 9430 |

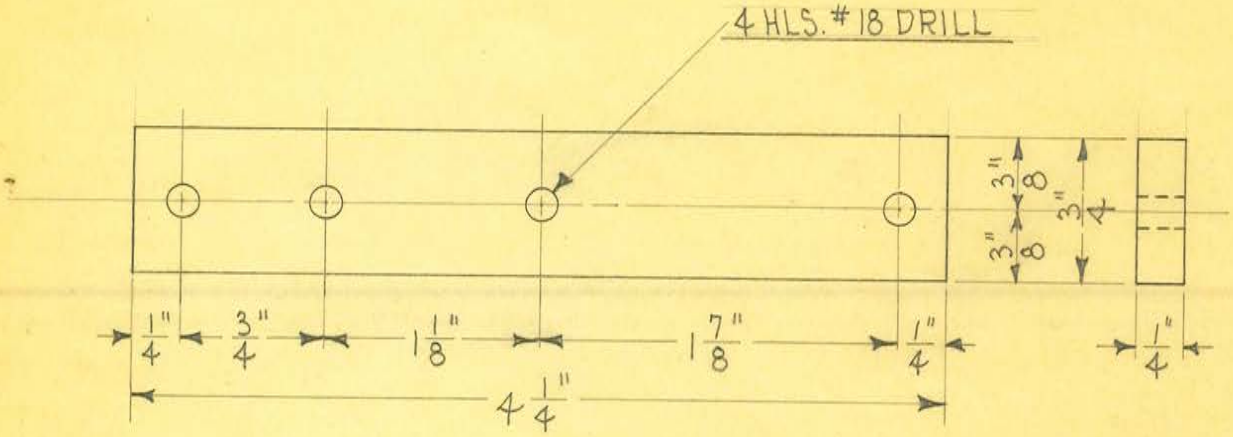


1 REQUIRED

OBSOLETE

| | | | |
|---|---|---|---|
| SIZE | 1/4" SHEET | ISSUE 2-19-35 | A.E. |
| KIND | RICHELAIN | CHANGED | |
| SHAPE | BAKELITE | " | |
| FINISH | | " | |
| TEMP. | | " | |
| PATT. | | " | |

**TITLE:** MODEL "SW17" SHORT WAVE HIGH FREQ. OUTFIT
OSCILLATING COIL TERM. STRIP

H. G. FISCHER & CO.
2335 WABANSIA AVE.
CHICAGO, ILL

CAT. NO.

PART NO. 9431

OBSOLETE

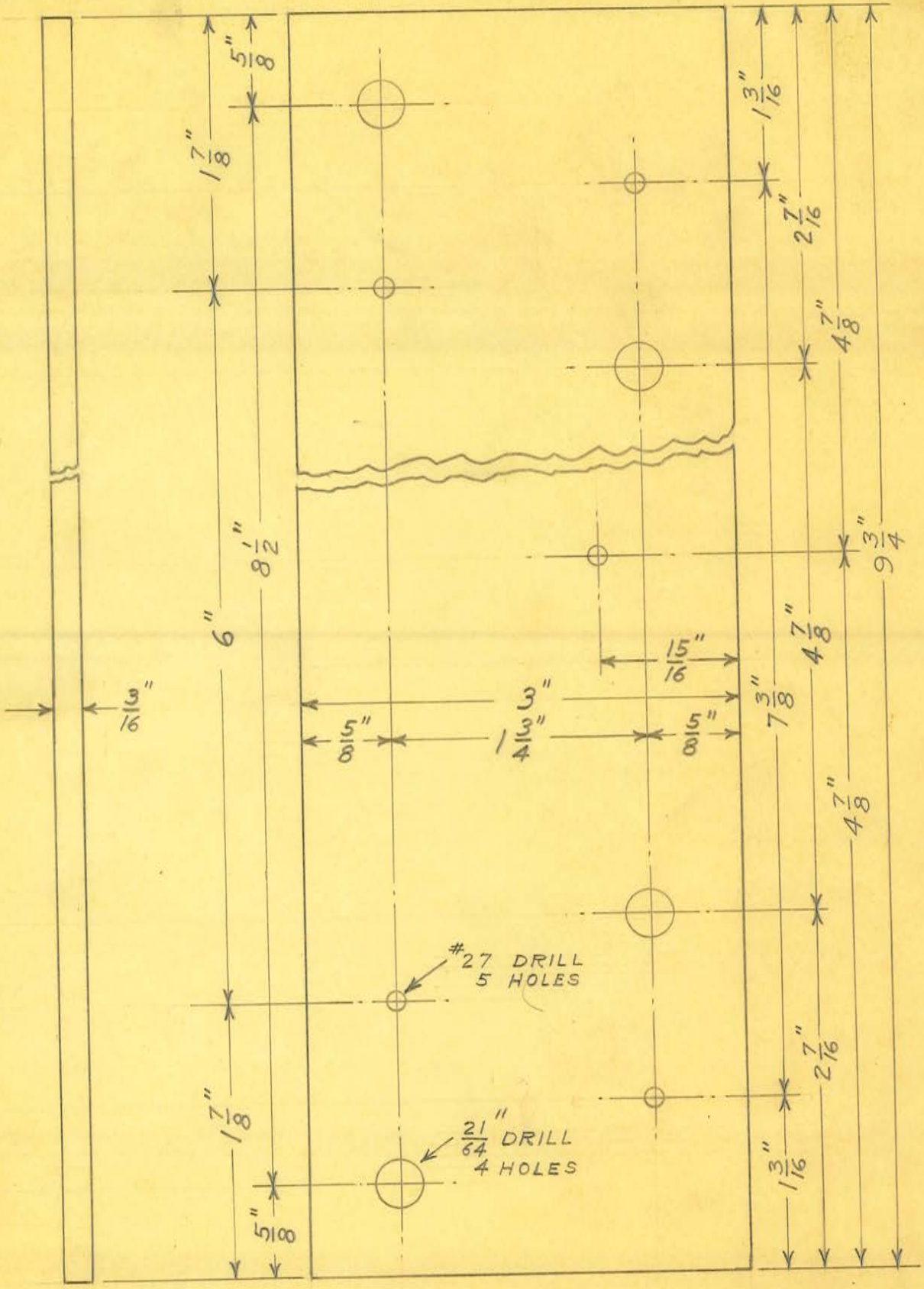


| | | | | |
|---|---|---|---|---|
| SIZE | 3"X9 3/4"X 3/16" | ISSUE W.J.W. | 8-2-35 | TITLE: MOD. "SW17" SHORT WAVE H.F. OUTFIT CORD SOCKET MTG. BOARD - DRILLED |
| KIND | MICALEX | CHANGED | | |
| SHAPE | SHEET | " | | |
| FINISH | | " | | |
| TEMP. | | " | | |
| PATT. | | " | | |

H. G. FISCHER & CO.
2335 WABANSIA AVE.
CHICAGO, ILL.

CAT. NO.

PART NO. 9434F

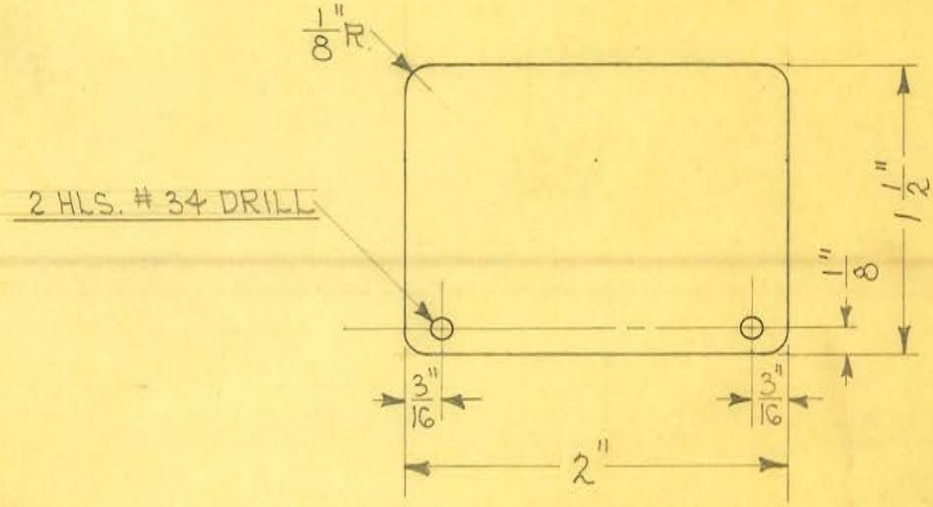


1 REQUIRED

OBSOLETE

| | | | |
|---|---|---|---|
| SIZE | .005" | ISSUE 1-30-36 | A.E. |
| KIND | SHEET COPPER | CHANGED | |
| SHAPE | | " | |
| FINISH | | " | |
| TEMP. | | " | |
| PATT. | | " | |

**TITLE:** MOD. "SW-17" SHORT WAVE H.F. OUTFIT
TRANSF. SEC. CONNECTING PLATE

H. G. FISCHER & CO.
2335 WABANSIA AVE.
CHICAGO, ILL.

CAT. NO.

PART NO. 9436

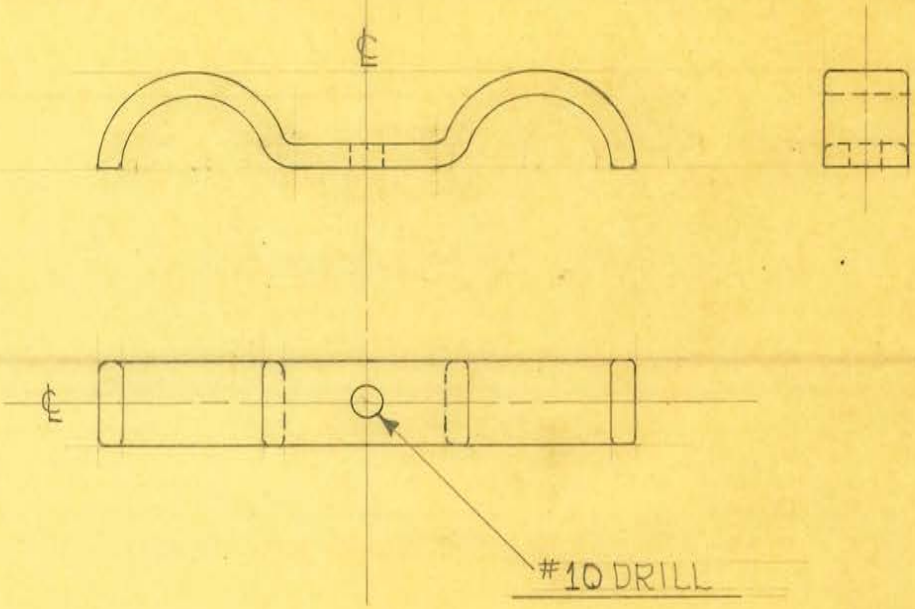


4 REQUIRED

OBSOLETE

| | | | |
|---|---|---|---|
| SIZE | | ISSUE 2-13-36 | 2/8. |
| KIND | BRASS CASTING | CHANGED | |
| SHAPE | | " | |
| FINISH | | " | |
| TEMP. | | " | |
| PATT. | 6857-936 | " | |

**TITLE:** FISCHER SHORT WAVE SURGICAL ATTACHMENT
RESISTOR SUPPORT

OBSOLETE

H. G. FISCHER & CO.
2335 WABANSIA AVE.
CHICAGO, ILL.

CAT. NO.

PART NO. 9452F

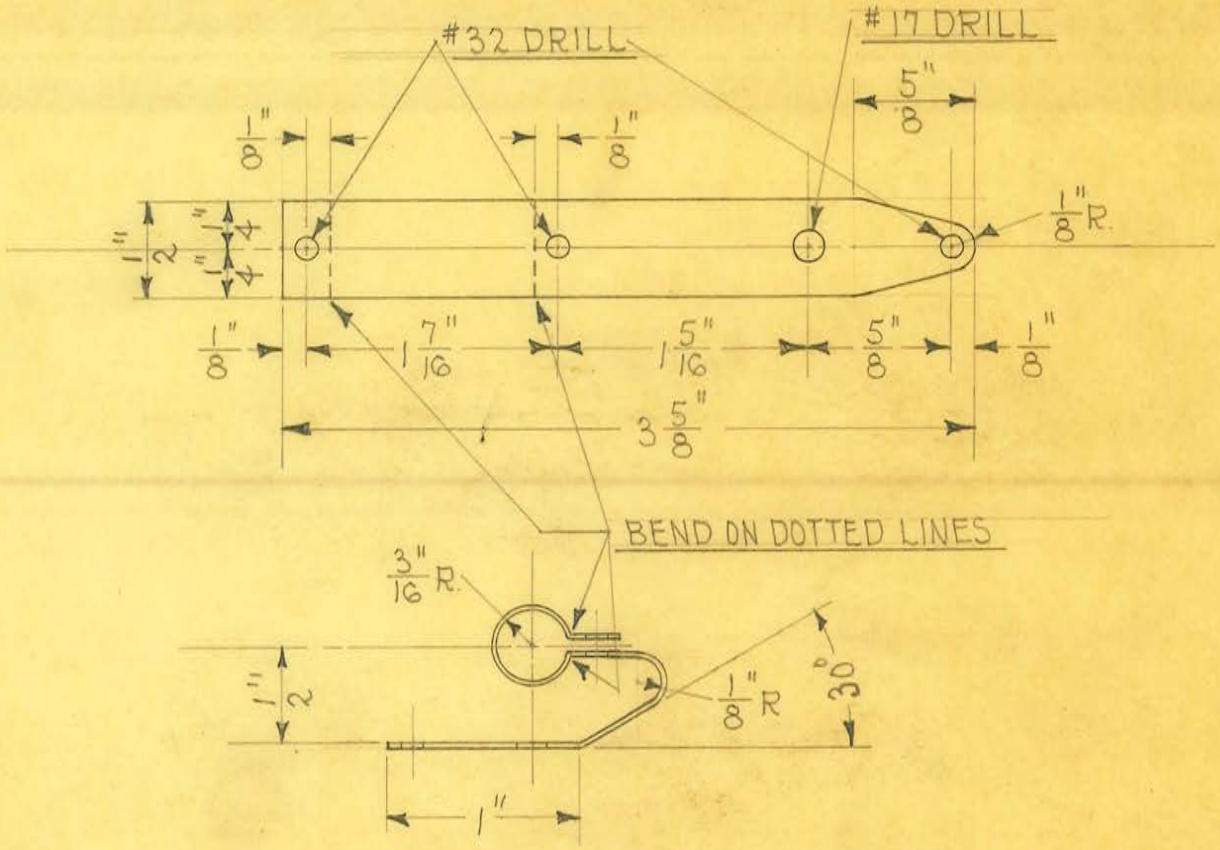


OBSOLETE

| | | | |
|---|---|---|---|
| SIZE | .016" SHEET | ISSUE 3-24-36 | A.E. |
| KIND | PHOS. BRONZE | CHANGED | |
| SHAPE | | " | |
| FINISH | | " | |
| TEMP. | | " | |
| PATT. | | " | |

**TITLE:** FISCHER SHORT WAVE SURGICAL ATTACHMENT RESISTOR SUPPORT

| | | |
|---|---|---|
| H. G. FISCHER & CO. 2335 WABANSIA AVE. CHICAGO, ILL. | CAT. NO. | PART NO. 9452A |

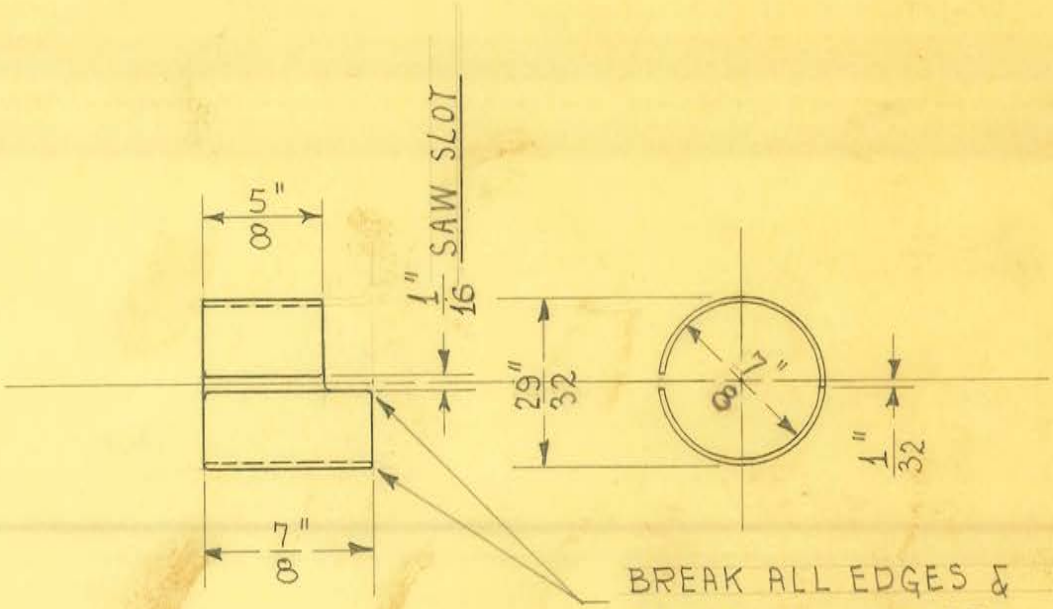


2 REQUIRED

29/32" O.D. X 7/8" I.D. BRASS TUBING

OBSOLETE

| | | | |
|---|---|---|---|
| SIZE | | ISSUE 5-18-43 | HE. |
| KIND | | CHANGED | |
| SHAPE | | " | |
| FINISH | | " | |
| TEMP. | | " | |
| PATT. | | " | |

**TITLE:** FISCHER SHOCKPROOF DENTAL "X"-RAY TUBE HEAD CABLE GROUND SLEEVE (FOR OVERSIZE CABLES FOR OLD STYLE UNITS)

| | | |
|---|---|---|
| H. G. FISCHER & CO. 2338 WABANSIA AVE. CHICAGO, ILL. | CAT. NO. | PART NO. 9494 |

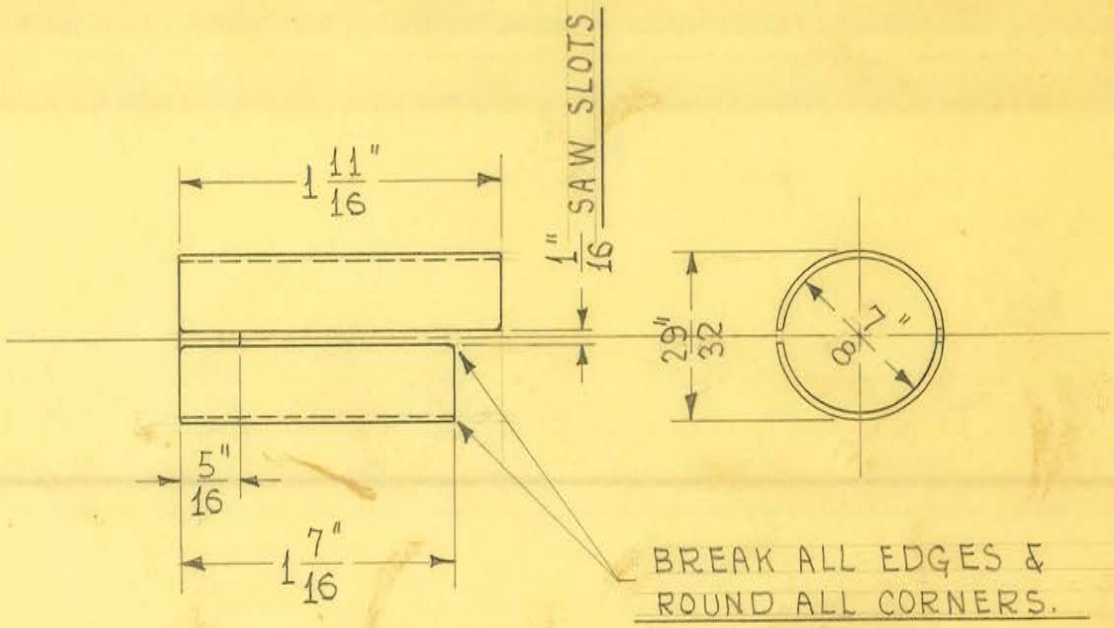


2 REQUIRED

29/32" O.D. X 7/8" I.D. BRASS TUBING

OBSOLETE

| | | | |
|---|---|---|---|
| SIZE | | ISSUE 5-18-43 | HE. |
| KIND | | CHANGED | |
| SHAPE | | " | |
| FINISH | | " | |
| TEMP. | | " | |
| PATT. | | " | |

**TITLE:** FISCHER SHOCKPROOF DENTAL "X"-RAY TUBE HEAD CABLE GROUND SLEEVE (FOR OVERSIZE CABLES FOR LATEST UNITS)

| | | |
|---|---|---|
| H. G. FISCHER & CO. 2338 WABANSIA AVE. CHICAGO, ILL. | CAT. NO. | PART NO. 9495 |

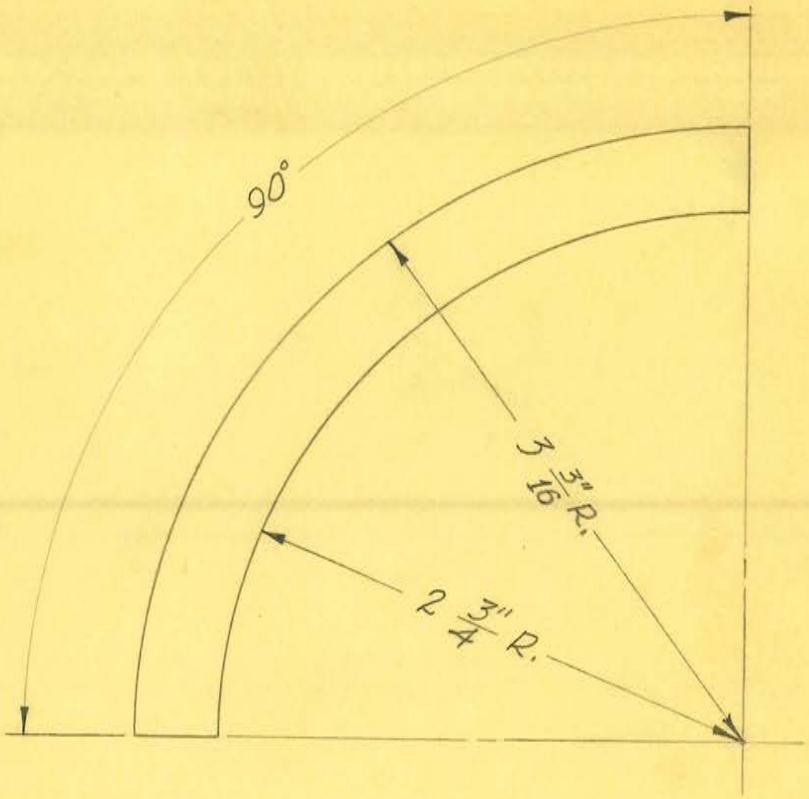


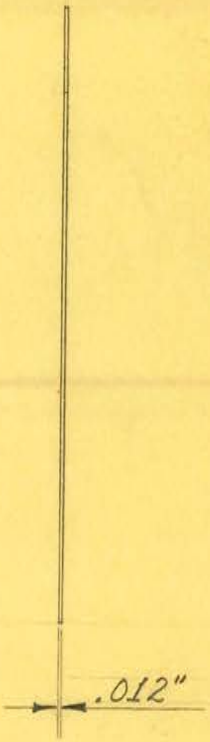


2 REQUIRED

OBSOLETE

| | | | |
|---|---|---|---|
| SIZE | .012" SHEET | ISSUE 3-16-39 | J.W. |
| KIND | LEAD | CHANGED | |
| SHAPE | | " | |
| FINISH | | " | |
| TEMP. | | " | |
| PATT. | | " | |

**TITLE:**
FISCHER SHOCKPROOF DENTAL "X-RAY"
H.T. CABLE STRESS CONE RELIEF STRIP - TOP
TUBE HEAD END

H. G. FISCHER & CO.
2335 WABANSIA AVE.
CHICAGO, ILL.

CAT. NO.

PART NO. 9496

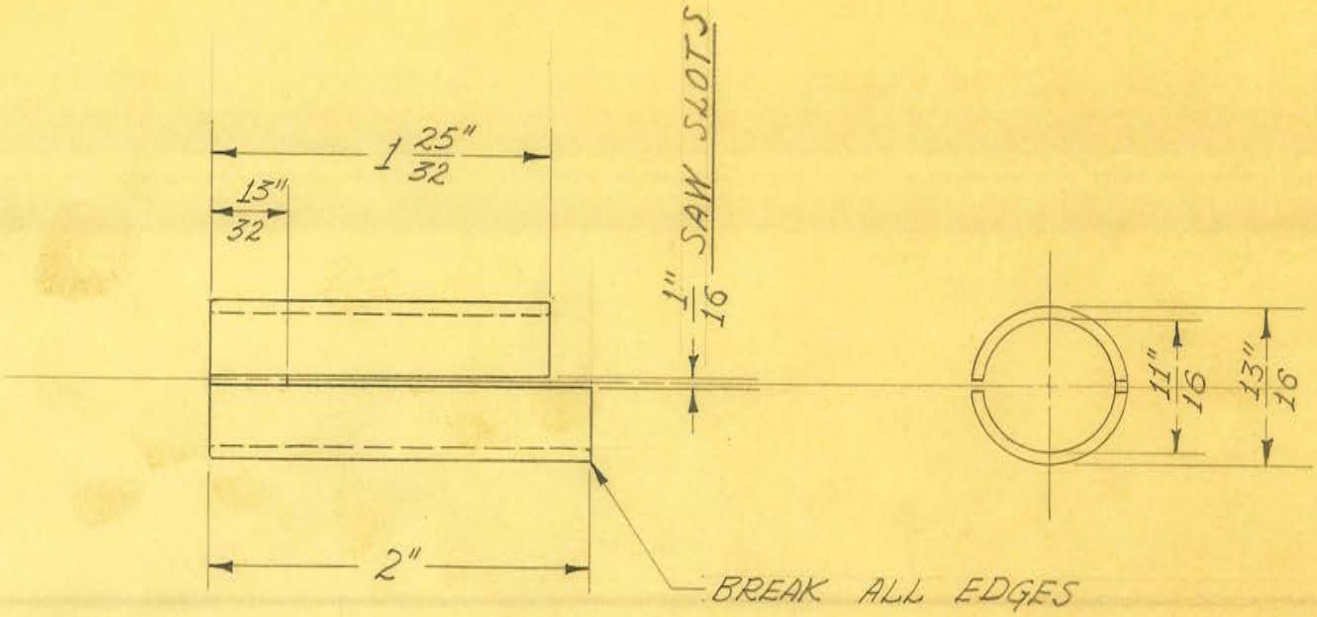


2 REQUIRED

OBSOLETE

| | | | |
|---|---|---|---|
| SIZE | 13/16" O.D. X 11/16" I.D. | ISSUE 3-16-39 | J.W. |
| KIND | BRASS TUBING | CHANGED | |
| SHAPE | | " | |
| FINISH | | " | |
| TEMP. | | " | |
| PATT. | | " | |

**TITLE:** FISCHER SHOCKPROOF DENTAL "X-RAY" TUBE HEAD CABLE GROUND SLEEVE

H. G. FISCHER & CO.
2335 WABANSIA AVE.
CHICAGO, ILL.

CAT. NO.

PART NO. 9497

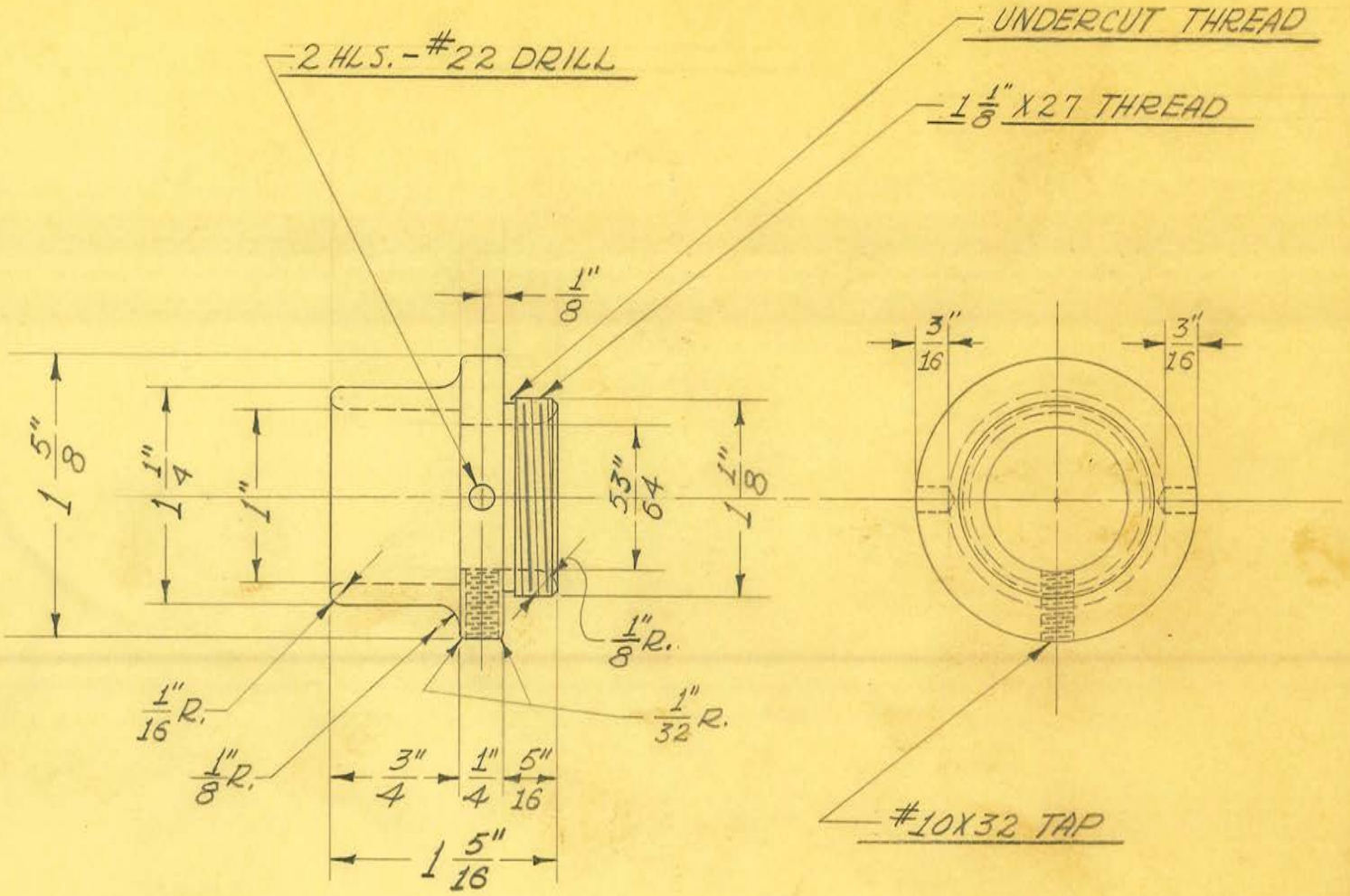


2 REQUIRED

OBSOLETE

| | | | |
|---|---|---|---|
| SIZE | 1 5/8" DIAM. | C.M. ISSUE 3-16-39 | J.W. |
| KIND | BRASS ROD. | CHANGED | |
| SHAPE | | " | |
| FINISH | | " | |
| TEMP. | | " | |
| PATT. | | " | |

**TITLE:** FISCHER SHOCKPROOF DENTAL "X-RAY" TUBE HEAD STRESS CONE CAP (FOR OLD STYLE CABLE)

H. G. FISCHER & CO.
2335 WABANSIA AVE.
CHICAGO, ILL.

CAT. NO.

PART NO. 9498

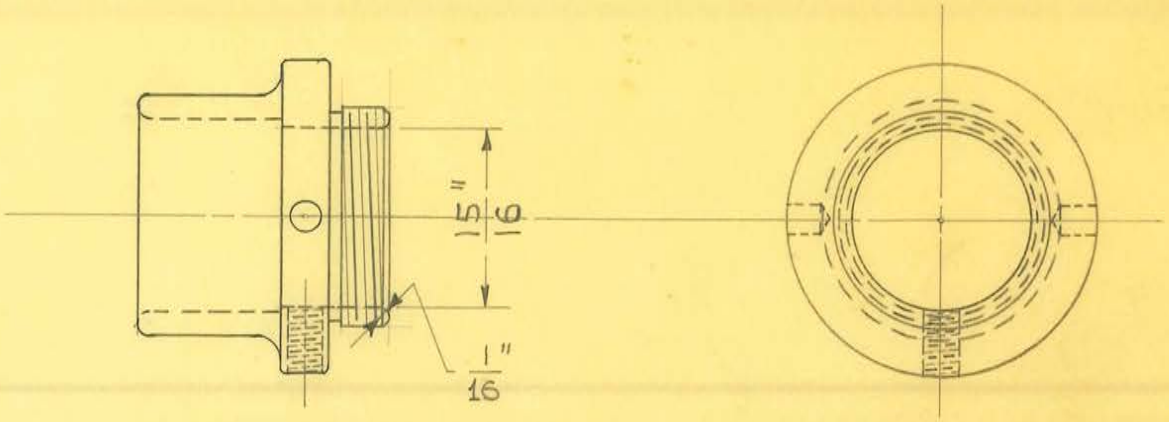


2 REQUIRED

OBSOLETE

| | | | |
|---|---|---|---|
| SIZE | FROM 9498 | ISSUE 5-18-43 | HE. |
| KIND | | CHANGED | |
| SHAPE | | " | |
| FINISH | | " | |
| TEMP. | | " | |
| PATT. | | " | |

**TITLE:** FISCHER SHOCKPROOF DENTAL "X"-RAY TUBE HEAD STRESS CONE CAP (FOR OVERSIZE CABLES FOR OLD STYLE UNITS)

H. G. FISCHER & CO.
2335 WABANSIA AVE.
CHICAGO, ILL.

CAT. NO.

PART NO. 9498 1/2

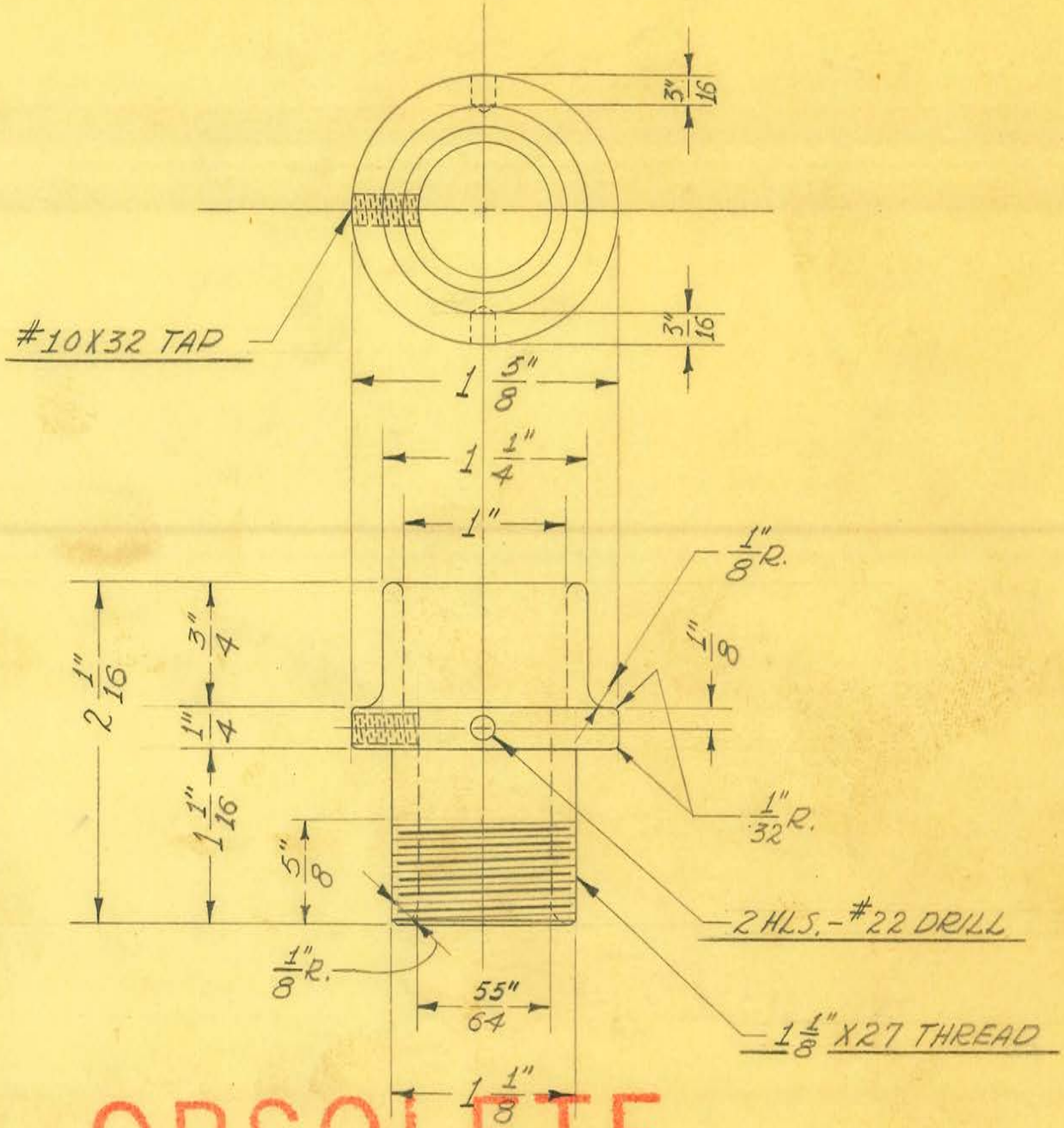


OBSOLETE

2 REQUIRED

| | | | |
|---|---|---|---|
| SIZE | 1 5/8" DIAM. | E.M. ISSUE 3-16-39 | J.W. |
| KIND | BRASS ROD | CHANGED | |
| SHAPE | | " | |
| FINISH | | " | |
| TEMP. | | " | |
| PATT. | | " | |

**TITLE:**
FISCHER SHOCKPROOF DENTAL "X-RAY" TUBE HEAD STRESS CONE CAP

| | | |
|---|---|---|
| H. G. FISCHER & CO. 2335 WABANSIA AVE. CHICAGO, ILL. | CAT. NO. | PART NO. 9499 |

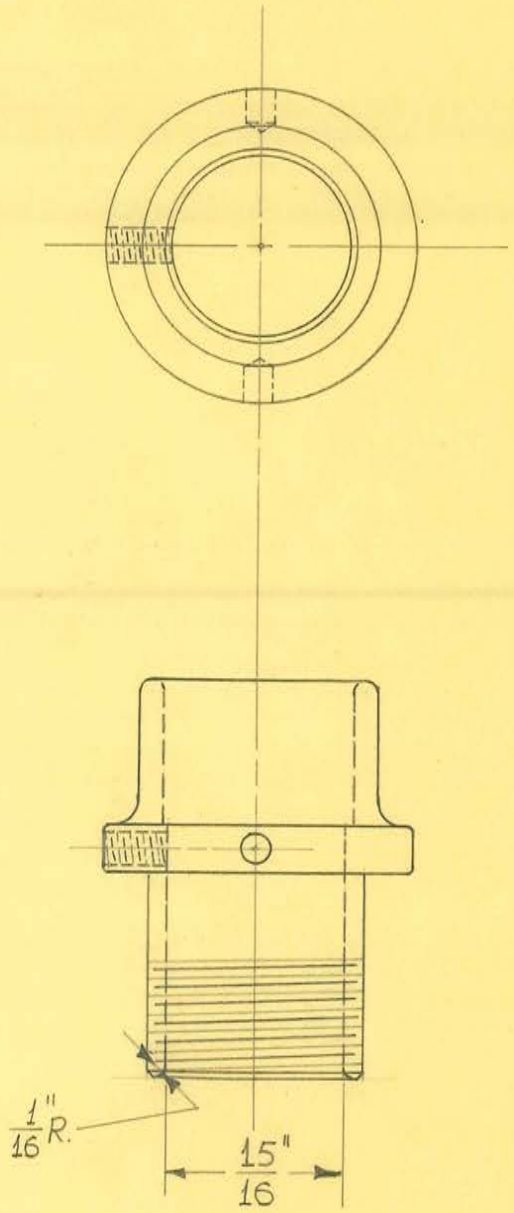


OBSOLETE

2 REQUIRED

| | | | |
|---|---|---|---|
| SIZE | FROM 9499 | ISSUE 5-18-43 | HE. |
| KIND | | CHANGED | |
| SHAPE | | " | |
| FINISH | | " | |
| TEMP. | | " | |
| PATT. | | " | |

**TITLE:** FISCHER SHOCKPROOF DENTAL "X"-RAY TUBE HEAD STRESS CONE CAP (FOR OVERSIZE CABLES)

H. G. FISCHER & CO.
2335 WABANSIA AVE.
CHICAGO, ILL.

CAT. NO.

PART NO. 9499 1/2

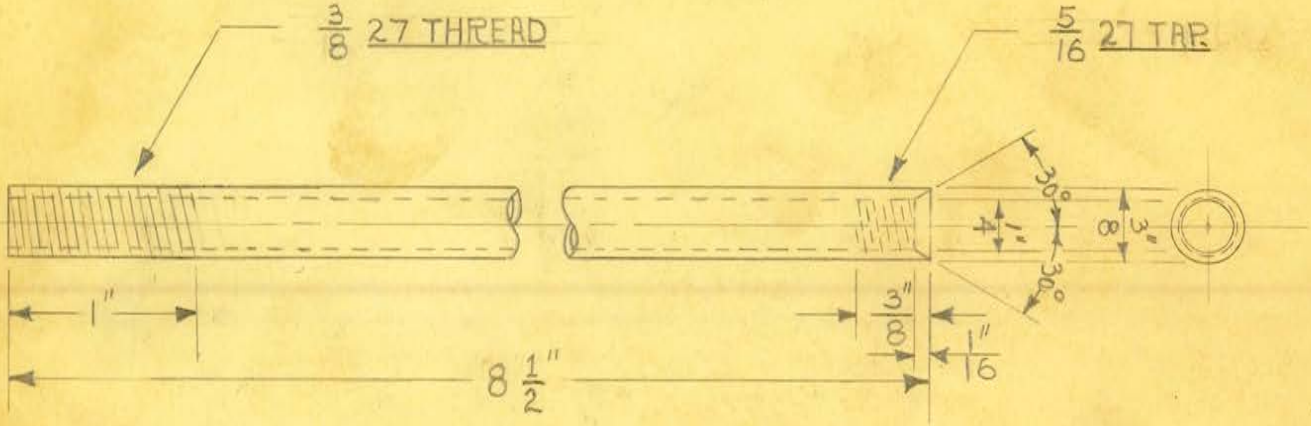


1 REQUIRED

OBSOLETE

| | | | | |
|---|---|---|---|---|
| SIZE | 3/8" O.D X 1/4" I.D | ISSUE 4-29-35 | J.W. | TITLE: SHOCKPROOF DENTAL X TRANSF. VENT TUBE |
| KIND | BRASS TUBING | CHANGED | | |
| SHAPE | | " | | |
| FINISH | | " | | |
| TEMP. | | " | | |
| PATT. | | " | | |

H. G. FISCHER & CO.
2335 WABANSIA AVE.
CHICAGO, ILL.

CAT. NO.

PART NO. 9563

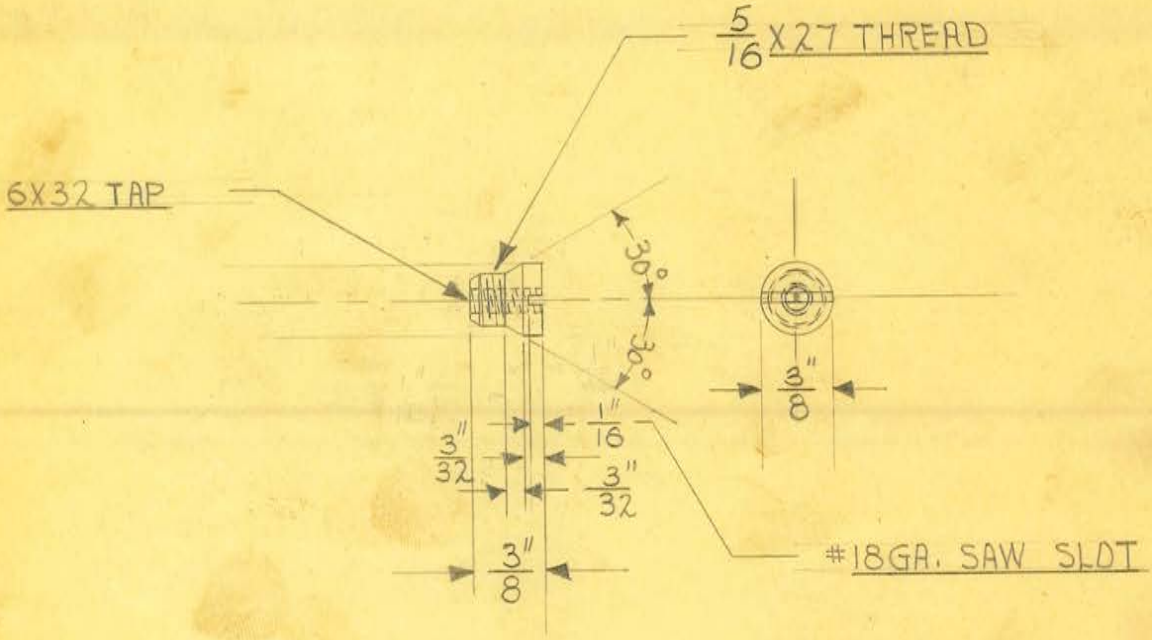


1 REQUIRED

OBSOLETE

| | | | |
|---|---|---|---|
| SIZE | 3/8" BRASS | ISSUE 4-29-35 | J.W. |
| KIND | ROD | CHANGED | |
| SHAPE | | " | |
| FINISH | CHROME #2 | " | |
| TEMP. | | " | |
| PATT. | | " | |

**TITLE:** SHOCKPROOF DENTAL X TRANSF. VENT. TUBE CAP

H. G. FISCHER & CO.
2335 WABANSIA AVE.
CHICAGO, ILL.

CAT. NO.

PART NO. 9564

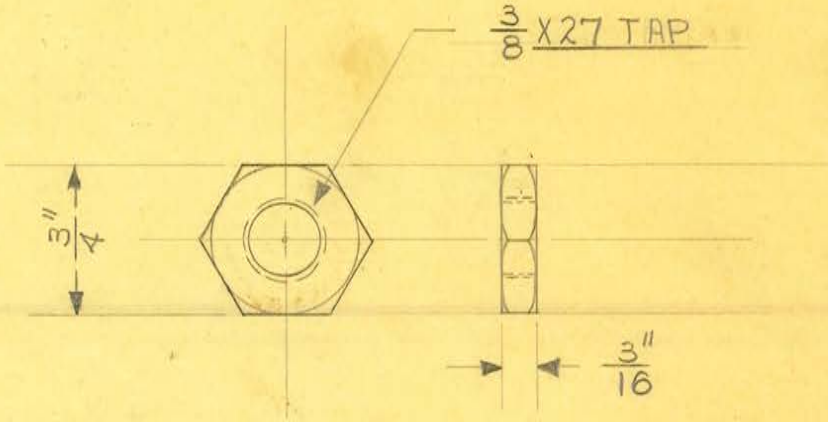


2 REQUIRED

OBSOLETE

| | | | | |
|---|---|---|---|---|
| SIZE | 3/4" HEX. | ISSUE 4-29-35 | J.W. | TITLE: SHOCKPROOF DENTAL X TRANSF. VENT TUBE CLAMP NUT |
| KIND | BRASS BAR | CHANGED | | |
| SHAPE | | " | | |
| FINISH | | " | | |
| TEMP. | | " | | |
| PATT. | | " | | |

H. G. FISCHER & CO.
2335 WABANSIA AVE.
CHICAGO, ILL.

CAT. NO.

PART NO. 9565

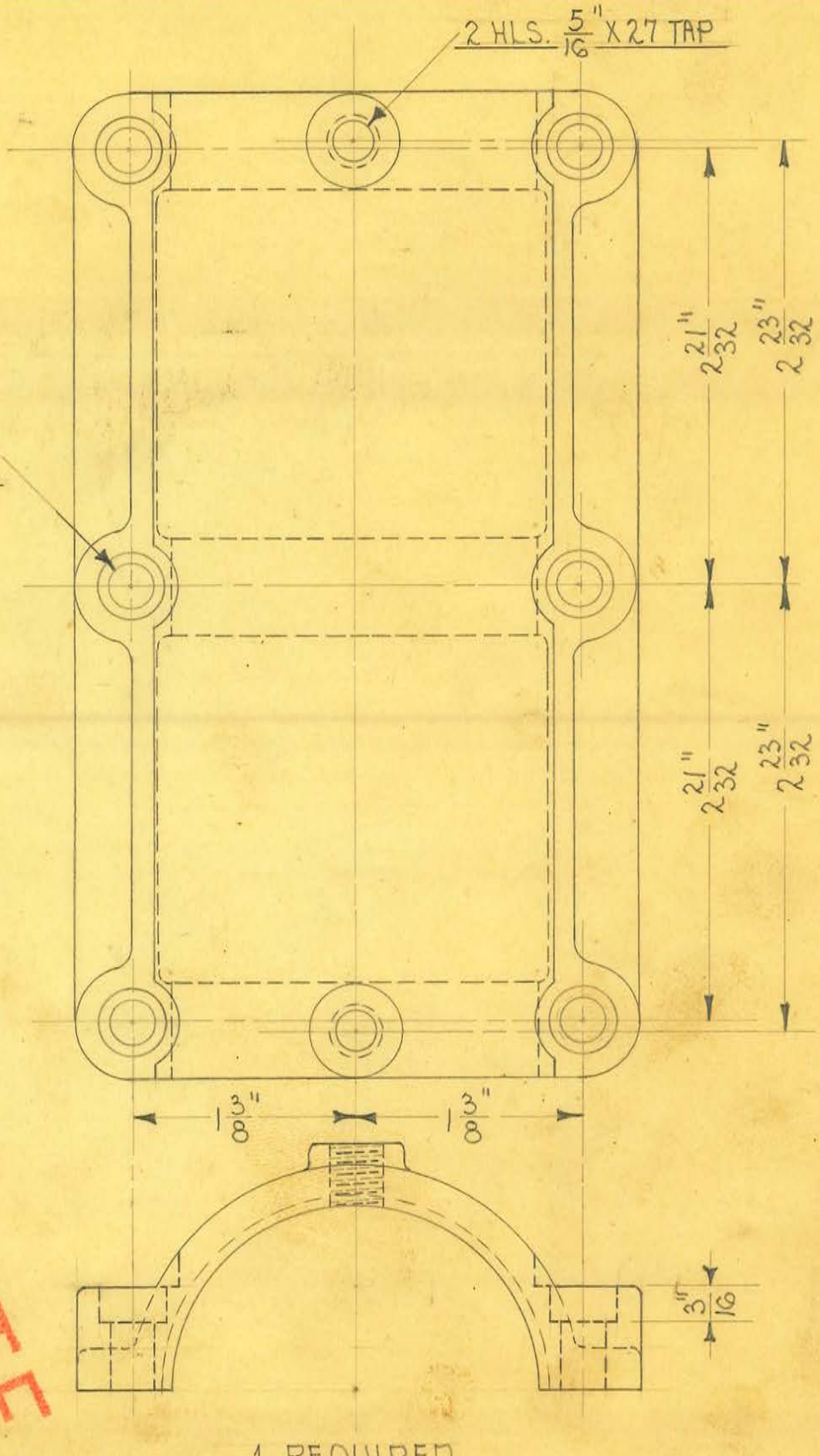


OBSOLETE

1 REQUIRED

| | | | |
|---|---|---|---|
| SIZE | | ISSUE 4-29-35 | H.E. |
| KIND | ALUM. CASTING | CHANGED | |
| SHAPE | | " | |
| FINISH | MAH. #51 | " | |
| TEMP. | | " | |
| PATT. | 7226-809 | " | |

**TITLE:** SHOCKPROOF DENTAL "X" REAR CASE TUBE CAP

H. G. FISCHER & CO.
2335 WABANSIA AVE.
CHICAGO, ILL.

CAT. NO.

PART NO. 9572F

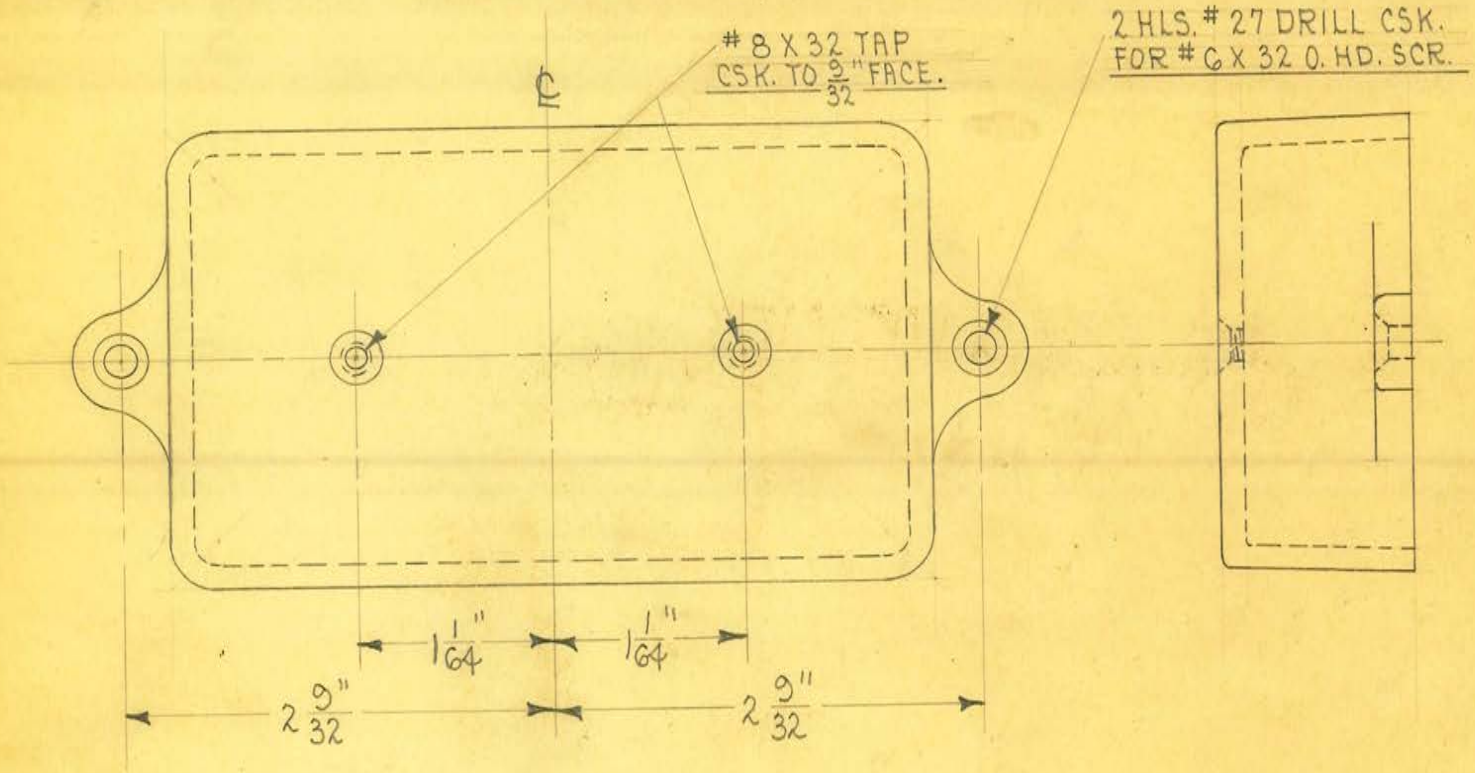


1 REQUIRED

OBSOLETE

| | | | |
|---|---|---|---|
| SIZE | | ISSUE 5-22-35 | A.E. |
| KIND | ALUM. CASTING | CHANGED | |
| SHAPE | | " | |
| FINISH | MAH. # 51 | " | |
| TEMP. | | " | |
| PATT. | 7227-810 | " | |

**TITLE:** SHOCKPROOF DENTAL "X" VOLTAGE CHANGE COVER

H. G. FISCHER & CO.
2335 WABANSIA AVE.
CHICAGO, ILL.

CAT. NO.

PART NO. 9573 F

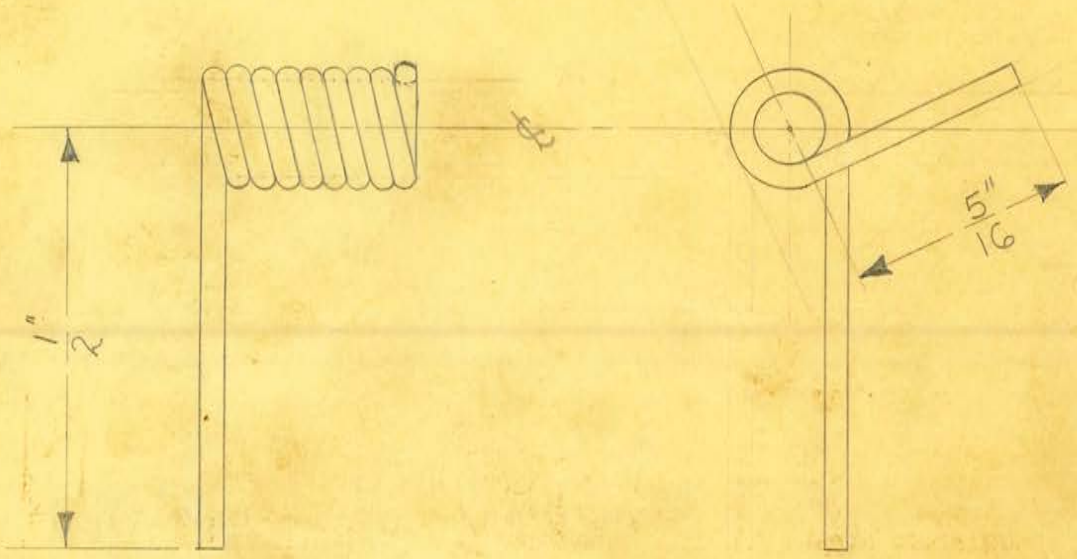


SCALE ¼ DIAM.

8 TURNS WOUND
ON $\frac{3}{32}$" ROD

1 REQUIRED

OBSOLETE

| | | | | |
|---|---|---|---|---|
| SIZE | .030 MUSIC | ISSUE 8-27-35 | J.W. | TITLE: SHOCKPROOF DENTAL X LEAD BOX COVER SPRING |
| KIND | WIRE | CHANGED | | |
| SHAPE | | " | | |
| FINISH | | " | | |
| TEMP. | | " | | |
| PATT. | | " | | |

H. G. FISCHER & CO.
2335 WABANSIA AVE.
CHICAGO, ILL.

CAT. NO.

PART NO. 9577

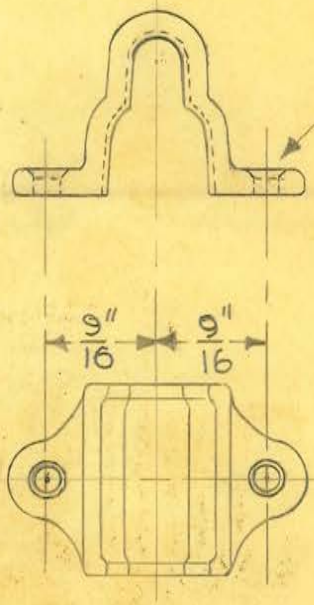


1 REQUIRED

OBSOLETE

| | | | |
|---|---|---|---|
| SIZE | | ISSUE 5-1-35 | J.W. |
| KIND | ALUM. CASTING | CHANGED | |
| SHAPE | | " | |
| FINISH | MAH. #51 | " | |
| TEMP. | | " | |
| PATT. | | " | |

**TITLE:** SHOCKPROOF DENTAL X LINE CORD STRAIN RELIEF

H. G. FISCHER & CO.
2335 WABANSIA AVE.
CHICAGO, ILL.

CAT. NO.

PART NO. 9578F

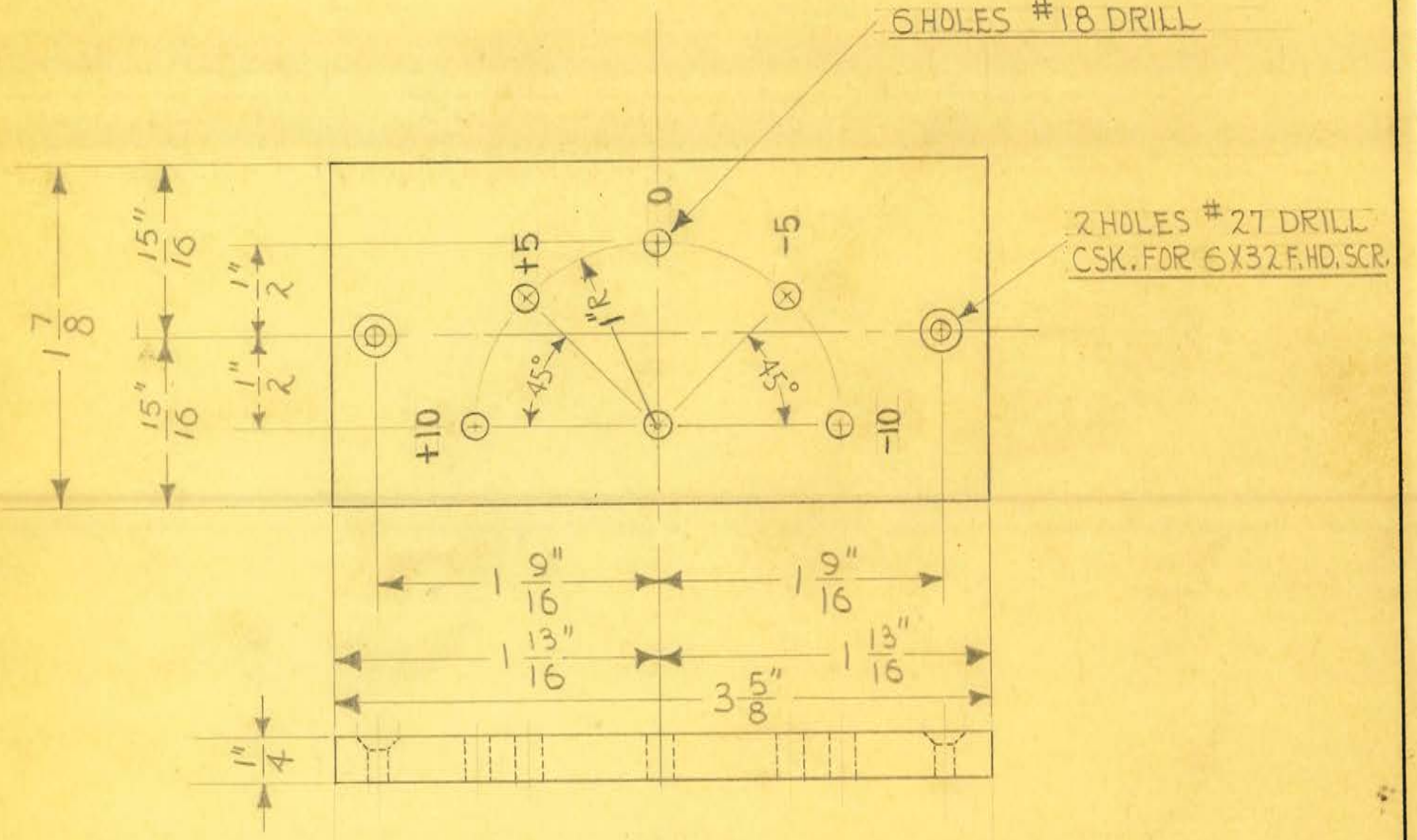


1 REQUIRED

OBSOLETE

| | | | |
|---|---|---|---|
| SIZE | 1/4" SHEET | ISSUE 5-15-35 | J.W. |
| KIND | RICHELAIN BAK. | CHANGED | |
| SHAPE | | " | |
| FINISH | | " | |
| TEMP. | | " | |
| PATT. | | " | |

**TITLE:** SHOCKPROOF DENTAL X VOLTAGE CHANGE TERMINAL BOARD

H. G. FISCHER & CO.
2335 WABANSIA AVE.
CHICAGO, ILL.

CAT. NO.

PART NO. 9579

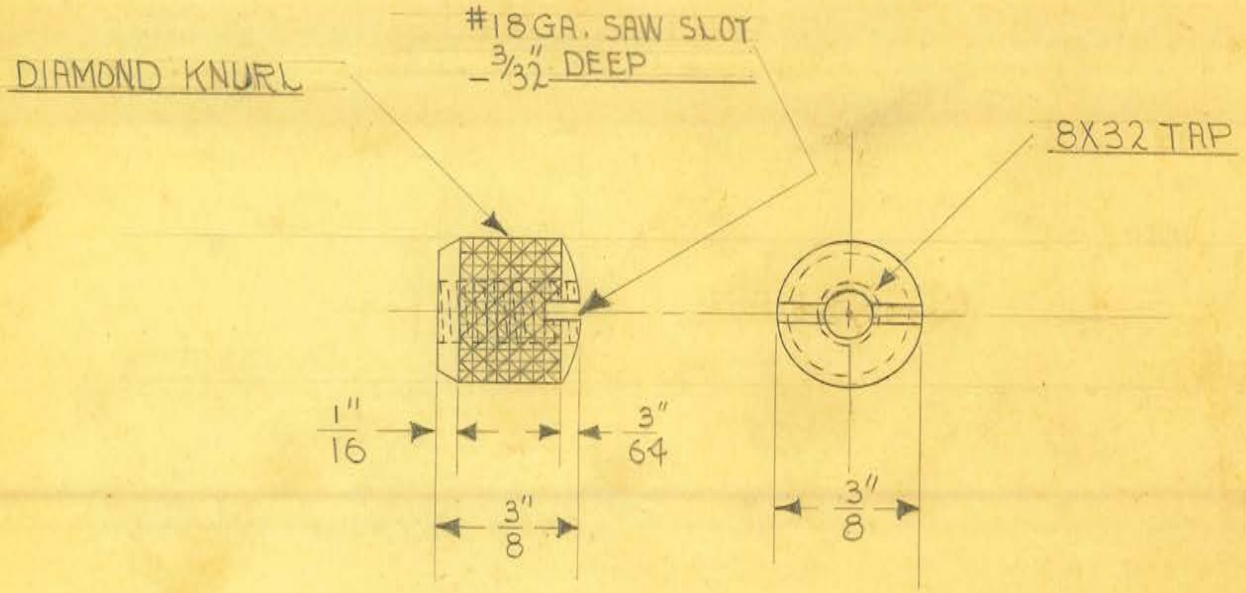


SCALE - 2 DIAM.

2 REQUIRED

OBSOLETE

| | | | | |
|---|---|---|---|---|
| SIZE | 3/8" BRASS | ISSUE 5-15-35 | J.W. | TITLE: SHOCKPROOF DENTAL X VOLTAGE CHANGE TERM. BOARD CONN. THUMB NUT |
| KIND | ROD | CHANGED | | |
| SHAPE | | " | | |
| FINISH | | " | | |
| TEMP. | | " | | |
| PATT. | | " | | |

H. G. FISCHER & CO.
2335 WABANSIA AVE.
CHICAGO, ILL.

CAT. NO.

PART NO. 9580

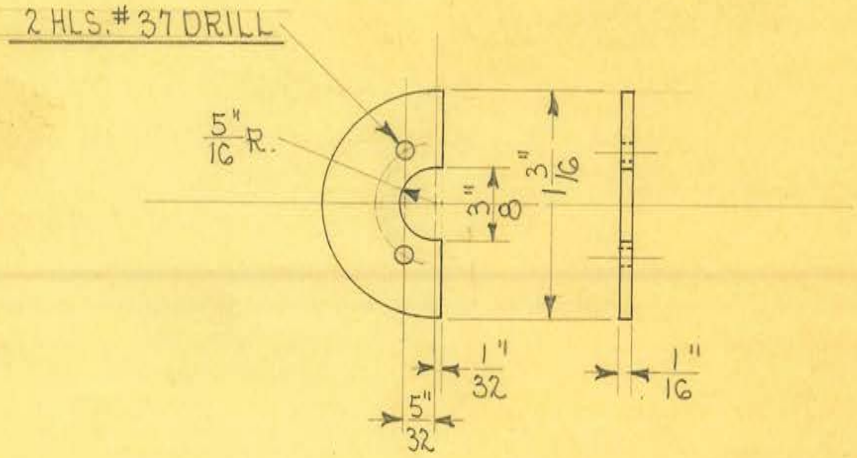


1 REQUIRED

OBSOLETE

| | | | |
|---|---|---|---|
| SIZE | 1/16" SHEET | ISSUE 4-22-35 | A.E. |
| KIND | BAKELITE | CHANGED | |
| SHAPE | | " | |
| FINISH | | " | |
| TEMP. | | " | |
| PATT. | | " | |

**TITLE:** SHOCKPROOF DENTAL "X" X-RAY TUBE CAP CONNECTION INSULATOR

H. G. FISCHER & CO.
2335 WABANSIA AVE.
CHICAGO, ILL.

CAT. NO.

PART NO. 9584

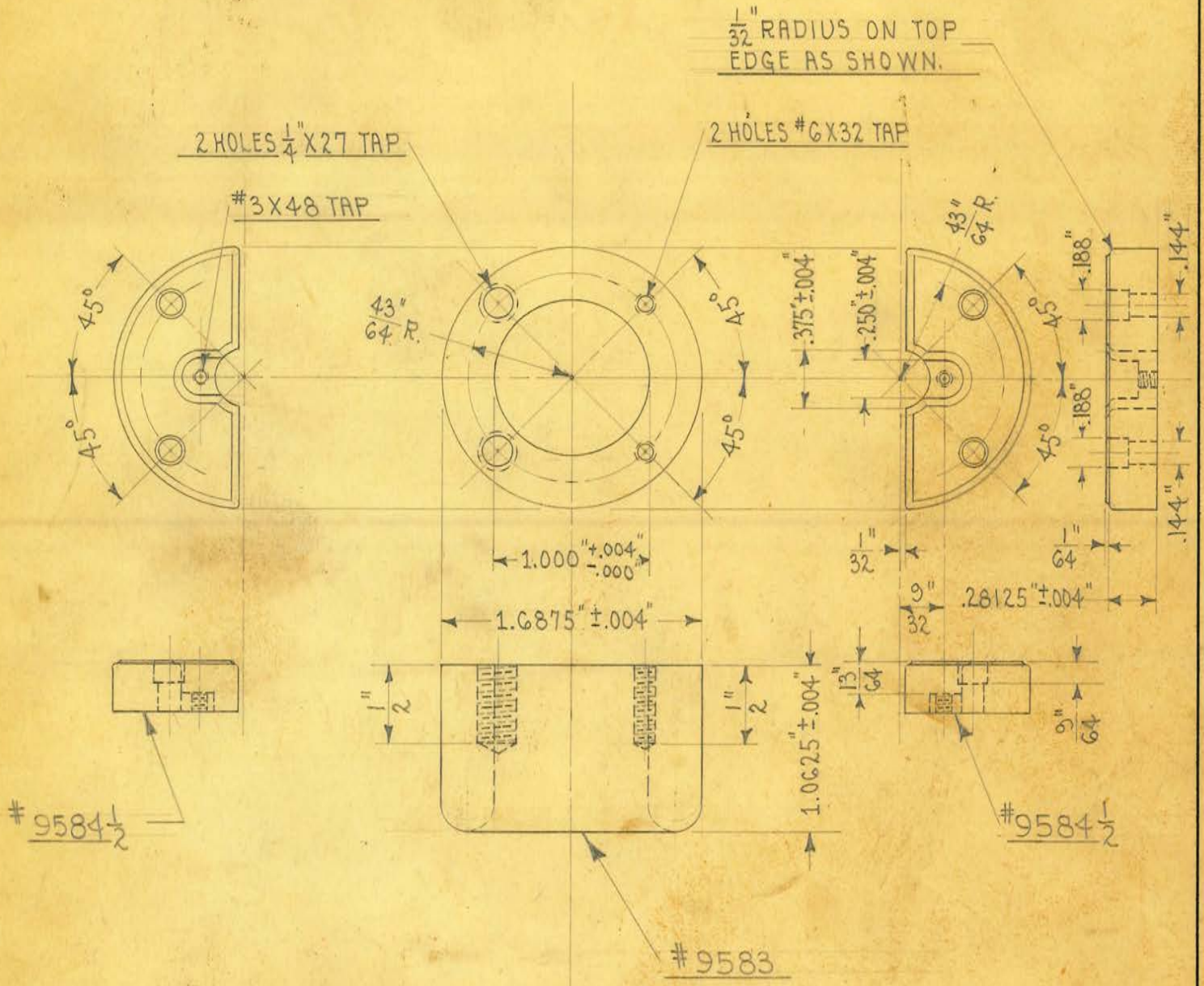


OBSOLETE

DRILL JIG FOR PCE# 9583 TOOL# 11457

| | | | |
|---|---|---|---|
| SIZE | | ISSUE 6-21-35 | A.E. |
| KIND | ALUMINUM | CHANGED | |
| ~~SHAPE~~ | DIE CASTING | " | |
| FINISH | | " | |
| TEMP. | | " | |
| PATT. | | " | |

**TITLE:** SHOCKPROOF DENTAL "X" CATHODE END TUBE CAP & CONTACT PLATE

H. G. FISCHER & CO.
2335 WABANSIA AVE.
CHICAGO, ILL.

CAT. NO.

PART NO. 9583 9584 1/2

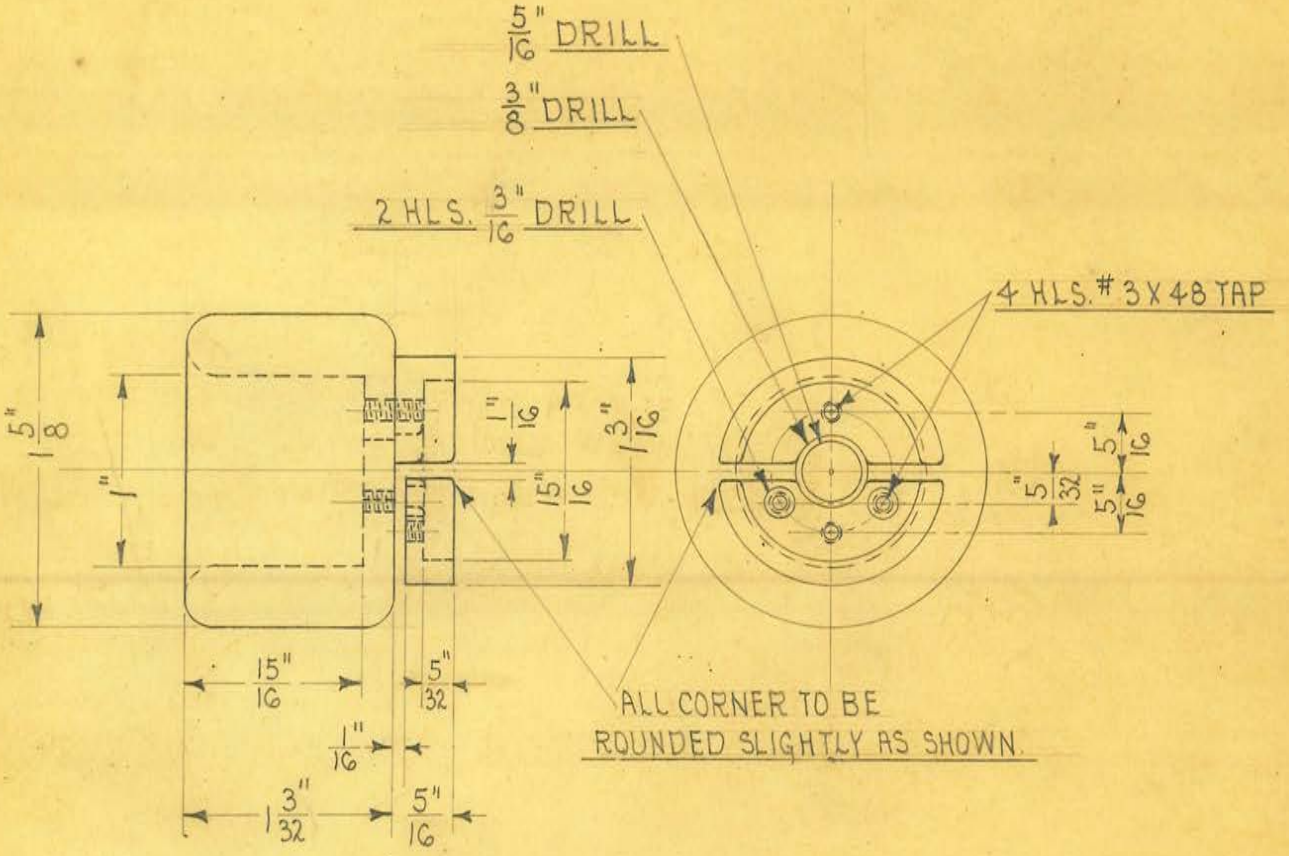


1 REQUIRED

OBSOLETE obsolete

| | | | |
|---|---|---|---|
| SIZE | 1 5/8" DIAM. | ISSUE 4-22-35 | J.H.E. |
| KIND | ALUM. ROD | CHANGED | |
| SHAPE | | " | |
| FINISH | POL. & BUFF | " | |
| TEMP. | | " | |
| PATT. | | " | |

**TITLE:** SHOCKPROOF DENTAL "X" X-RAY TUBE CAP

H. G. FISCHER & CO.
2335 WABANSIA AVE.
CHICAGO, ILL.

CAT. NO.

PART NO. 9583

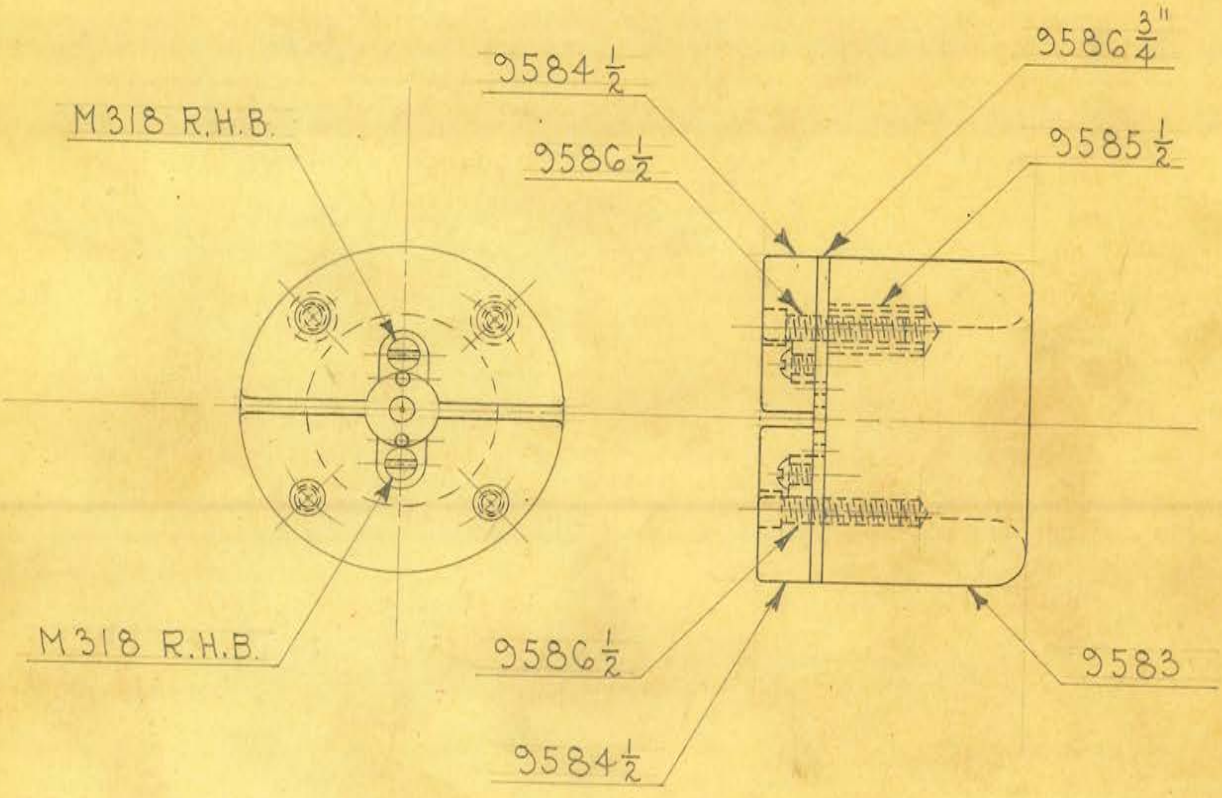


OBSOLETE

LIST OF OPERATIONS.

1 ST. SCREW 2-9585 1/2 BUSHINGS INTO 9583 AND FACE OFF FLUSH.

2 ND FASTEN 9586 3/4 INSULATOR & 2-9584 1/2 IN PLACE WITH 4-9586 1/2 SCREW STUDS & FACE OFF STUDS & ENTIRE SURFACE DOWN TO RADIUS.

3 RD PUT IN 2-M318 R.H.B. SCREWS & POLISH & BUFF.

obsolete

| | | | |
|---|---|---|---|
| SIZE | | ISSUE 9-30-35 | J.E. |
| KIND | | CHANGED | |
| SHAPE | | " | |
| FINISH | POL. & BUFF | " | |
| TEMP. | | " | |
| PATT. | | " | |

**TITLE:** SHOCKPROOF DENTAL "X" X-RAY TUBE CAP ASSEMBLY

H. G. FISCHER & CO.
2335 WABANSIA AVE.
CHICAGO, ILL.

CAT. NO.

PART NO. 9583GA

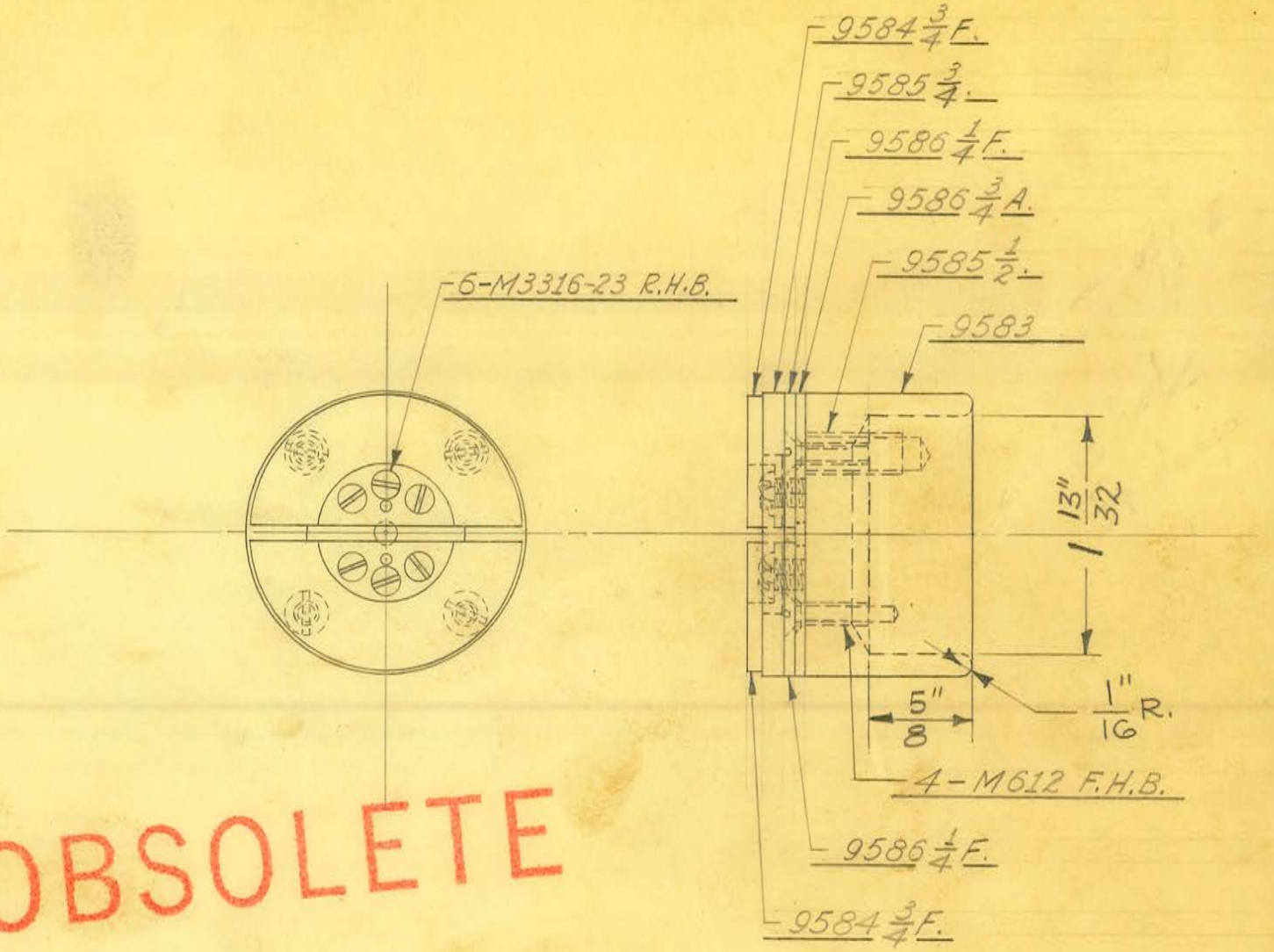


OBSOLETE

## LIST OF OPERATIONS.

1st. SCREW 2-9585 1/2 BUSHINGS INTO 9583F & FACE OFF FLUSH.

2nd. FASTEN 1-9586 3/4 A CAP CONN. INS. & 2-9586 1/4 F LOWER CONNECTOR PLATE WITH 4-M612 F.H.B SCREWS ONTO 9583F.

3rd. FASTEN 1-9585 3/4 CONN. PLATE INS. WASHER & 2-9584 3/4 F UPPER CONN. PLATE WITH 6-M3316-23 R.H.B. SCREWS ONTO 9583F.

4th. CUT DOWN 9585 1/2 BUSHINGS TO INSIDE CONTOUR OF 9583F.

5th. TURN DOWN DIAMETER OF COMPLETE ASSEMBLY, TO FIT GAUGE.

6th. POLISH & BUFF.

| | | | |
|---|---|---|---|
| SIZE | | ISSUE 6-27-38 | J.W. |
| KIND | | CHANGED | |
| SHAPE | | " 1-22-47 | J.W. |
| FINISH | POL. & BUFF. | " | |
| TEMP. | | " | |
| PATT. | | " | |

**TITLE:** SHOCKPROOF DENTAL "X" X-RAY TUBE CAP ASSEMBLY

H. G. FISCHER & CO.
2335 WABANSIA AVE.
CHICAGO, ILL.

CAT. NO.

PART NO. 9583GB

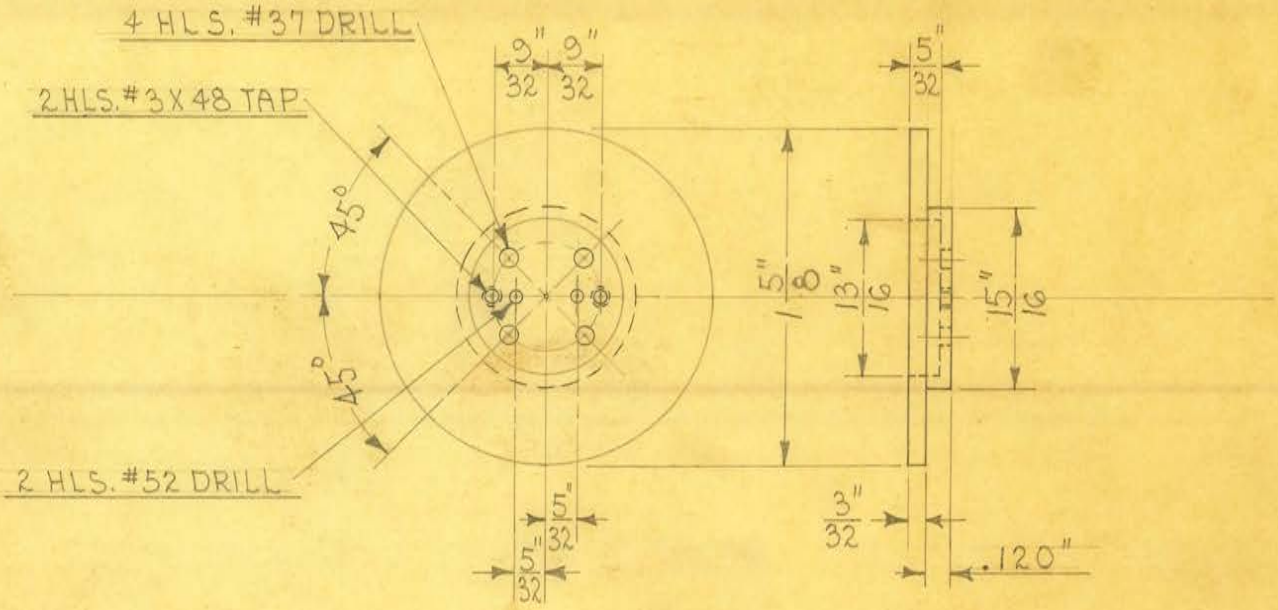


OBSOLETE

| | | | |
|---|---|---|---|
| SIZE | 1 5/8" DIAM. | ISSUE 9-4-36 | A.E. |
| KIND | BRASS ROD | CHANGED | |
| SHAPE | | " | |
| FINISH | | " | |
| TEMP. | | " | |
| PATT. | | " | |

**TITLE:** SHOCKPROOF DENTAL "X" X-RAY TUBE CAP
UPPER CONNECTOR PLATE - BLANK

H. G. FISCHER & CO.
2335 WABANSIA AVE.
CHICAGO, ILL.

CAT. NO.

PART NO. 9584 3/4

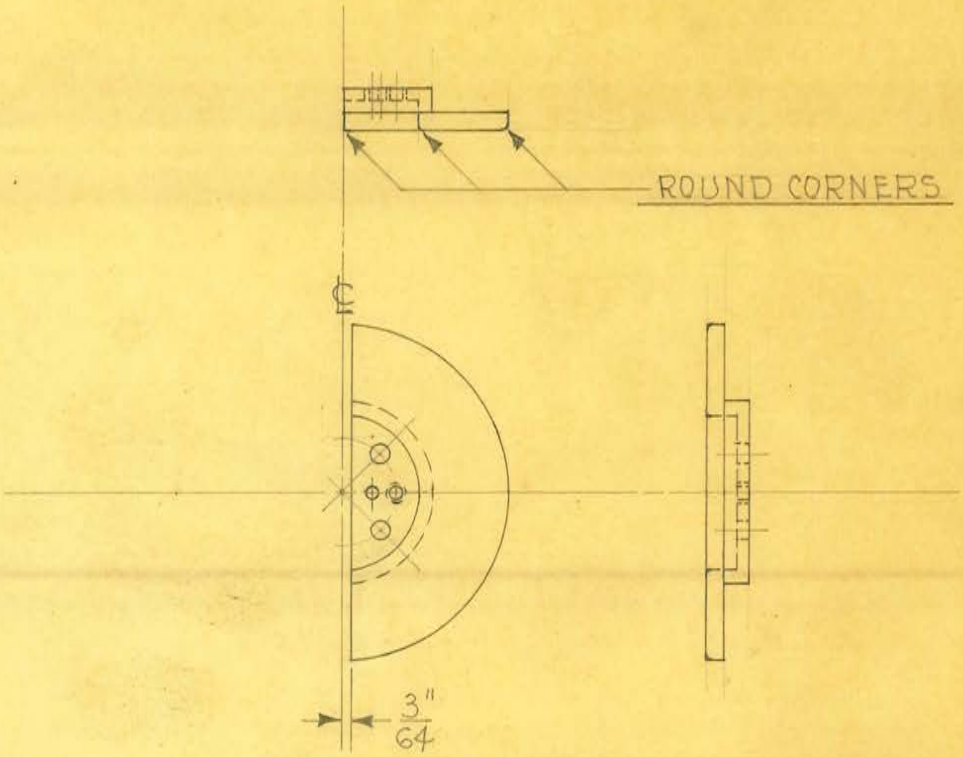


2 REQUIRED
FROM 9584 3/4

OBSOLETE

| | | | |
|---|---|---|---|
| SIZE | | ISSUE 9-8-36 | A.E. |
| KIND | | CHANGED | |
| SHAPE | | " | |
| FINISH | SILVER #5 | " | |
| TEMP. | | " | |
| PATT. | | " | |

**TITLE:** SHOCKPROOF DENTAL "X" X-RAY TUBE CAP
UPPER CONNECTOR PLATE

H. G. FISCHER & CO.
2338 WABANSIA AVE.
CHICAGO, ILL.

CAT. NO.

PART NO. 9584 3/4 F

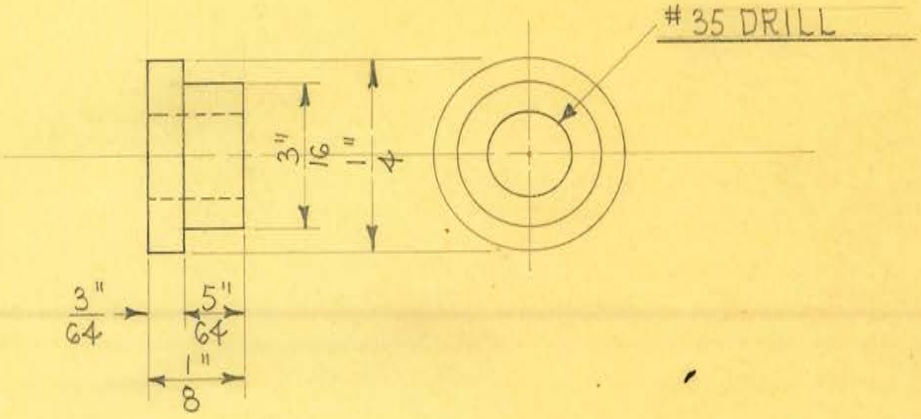


2 REQUIRED

SCALE ~ 4 DIAMETERS

OBSOLETE

| | | | |
|---|---|---|---|
| SIZE | 1/4" HARD | ISSUE 4-22-35 | A.E |
| KIND | RUBBER ROD | CHANGED | |
| SHAPE | | " | |
| FINISH | | " | |
| TEMP. | | " | |
| PATT. | | " | |

**TITLE:** SHOCKPROOF DENTAL "X" X-RAY TUBE CAP INSULATING BUSHING

H. G. FISCHER & CO.
2335 WABANSIA AVE.
CHICAGO, ILL.

CAT. NO.

PART NO. 9585

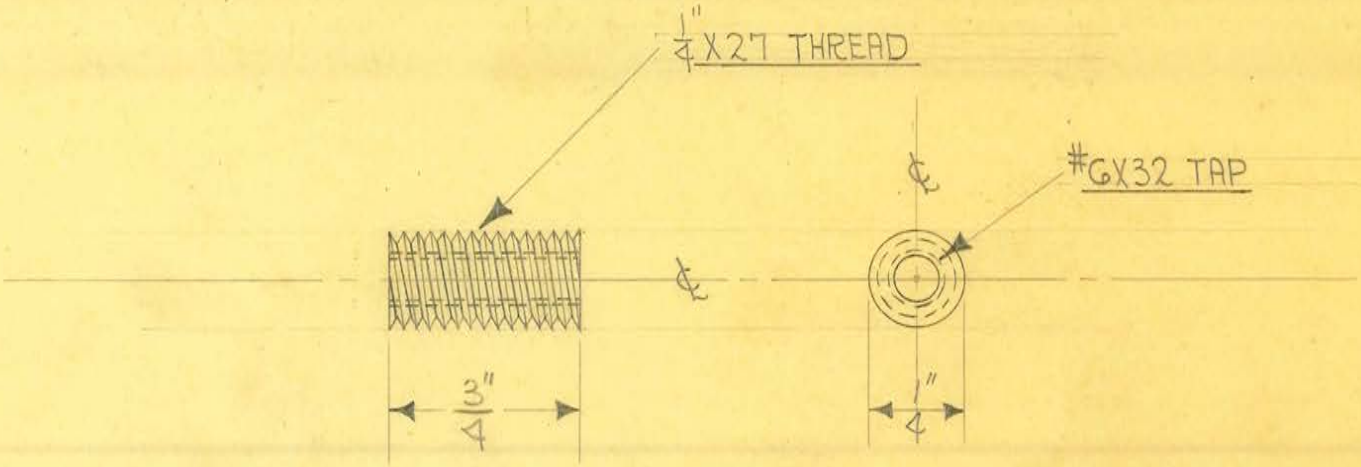


SCALE ~ 2 DIAM.

2 REQUIRED

OBSOLETE

| | | | |
|---|---|---|---|
| SIZE | 1/4" BAKELITE | ISSUE 9-3-35 | J.W. |
| KIND | ROD | CHANGED | |
| SHAPE | | " | |
| FINISH | | " | |
| TEMP. | | " | |
| PATT. | | " | |

**TITLE:** SHOCKPROOF DENTAL X-"X-RAY" TUBE CAP INS. SCREW.

| | | |
|---|---|---|
| H. G. FISCHER & CO. 2335 WABANSIA AVE. CHICAGO, ILL. | CAT. NO. | PART NO. 9585 1/2 |

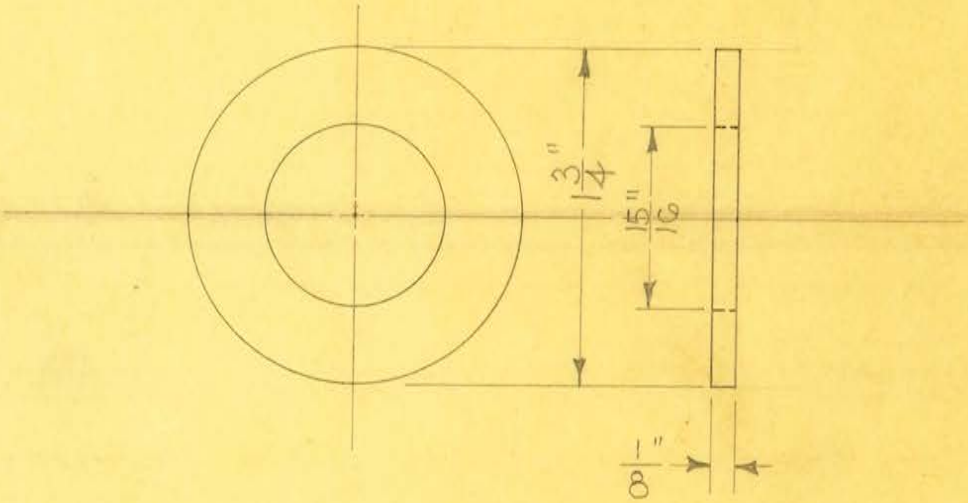


1 REQUIRED

OBSOLETE

| | | | |
|---|---|---|---|
| SIZE | 1/8" FABRIC | ISSUE 9-8-36 | A.E. |
| KIND | BASE BAKELITE | CHANGED | |
| SHAPE | SHEET | " | |
| FINISH | | " | |
| TEMP. | | " | |
| PATT. | | " | |

**TITLE:** SHOCKPROOF DENTAL "X" X-RAY TUBE CAP CONNECTOR PLATE INSULATING WASHER

H. G. FISCHER & CO.
2335 WABANSIA AVE.
CHICAGO, ILL.

CAT. NO.

PART NO. 9585 3/4

69

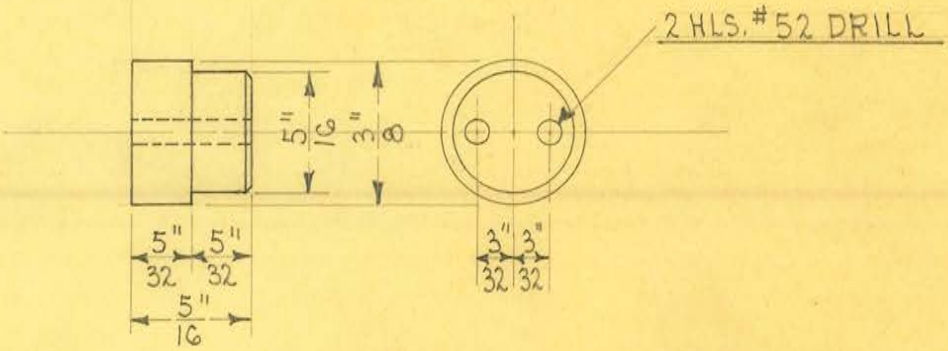


1 REQUIRED

SCALE ~ 2 DIAMETERS

OBSOLETE

| | | | |
|---|---|---|---|
| SIZE | 3/8" DIAM. | ISSUE 4-22-35 | J.E. |
| KIND | BAKELITE ROD | CHANGED | |
| SHAPE | | " | |
| FINISH | | " | |
| TEMP. | | " | |
| PATT. | | " | |

**TITLE:** SHOCKPROOF DENTAL "X" X-RAY TUBE CAP LEAD INSULATOR

H. G. FISCHER & CO.
2335 WABANSIA AVE.
CHICAGO, ILL.

CAT. NO.

PART NO. 9586

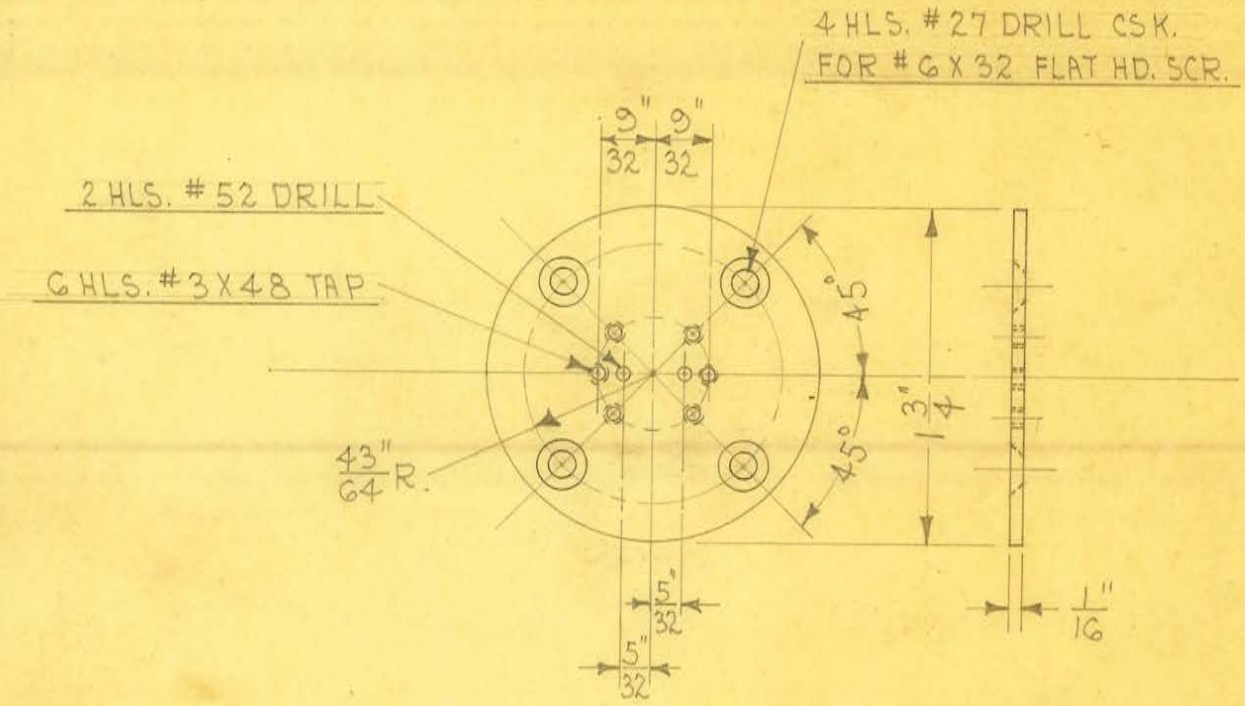


1 REQUIRED

OBSOLETE

| | | | |
|---|---|---|---|
| SIZE | 1/16" | ISSUE 9-8-36 | A.E. |
| KIND | SHEET BRASS | CHANGED | |
| SHAPE | | " | |
| FINISH | | " | |
| TEMP. | | " | |
| PATT. | | " | |

**TITLE:** SHOCKPROOF DENTAL "X" X-RAY TUBE CAP
LOWER CONNECTOR PLATE - BLANK

H. G. FISCHER & CO.
2335 WABANSIA AVE.
CHICAGO, ILL.

CAT. NO.

PART NO. 9586 1/4

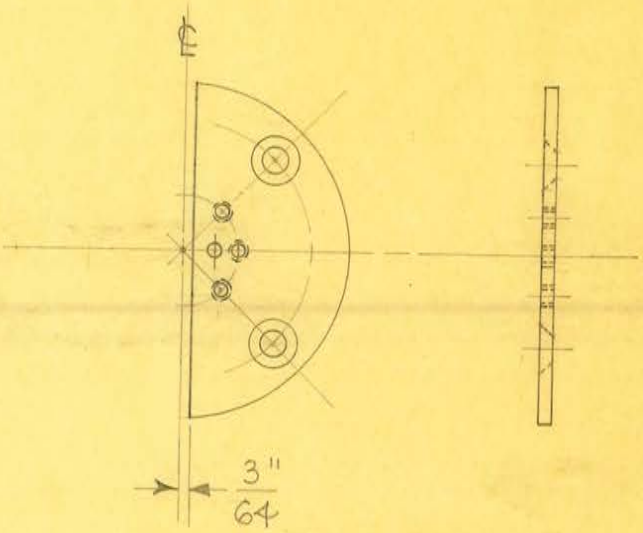


2 REQUIRED
FROM 9586 1/4

OBSOLETE

| | | | |
|---|---|---|---|
| SIZE | | ISSUE 9-8-36 | A.E. |
| KIND | | CHANGED | |
| SHAPE | | " | |
| FINISH | | " | |
| TEMP. | | " | |
| PATT. | | " | |

**TITLE:** SHOCKPROOF DENTAL "X" X-RAY TUBE CAP
LOWER CONNECTOR PLATE

H. G. FISCHER & CO.
2335 WABANSIA AVE.
CHICAGO, ILL.

CAT. NO.

PART NO. 9586 1/4 F

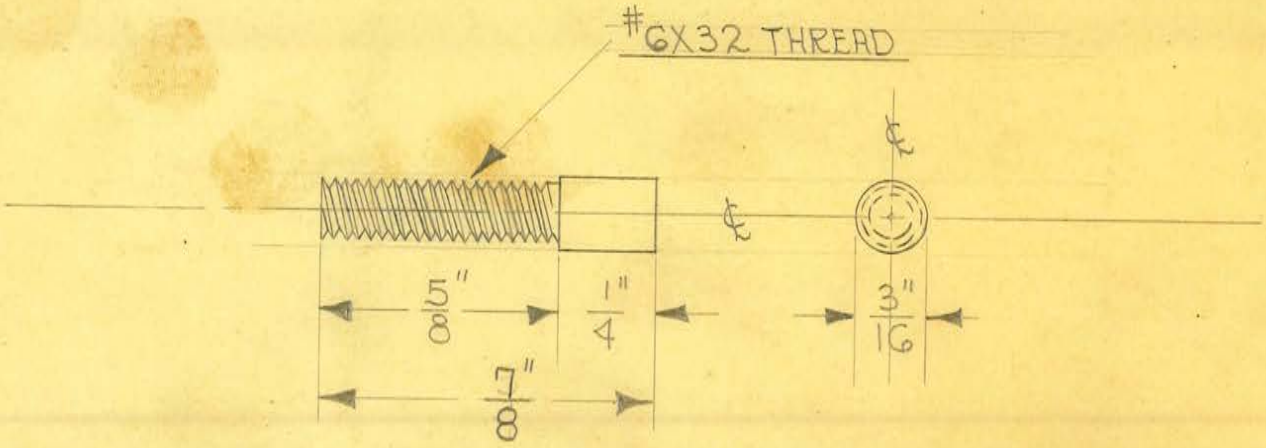


SCALE ÷ 2 DIAM.

4 REQUIRED

OBSOLETE

| | | | | |
|---|---|---|---|---|
| SIZE | 3/16" ALUMINUM ROD | ISSUE 9-3-35 | J.W. | TITLE: SHOCKPROOF DENTAL X X-RAY TUBE CAP SCREW STUD |
| KIND | | CHANGED | | |
| SHAPE | | " | | |
| FINISH | | " | | |
| TEMP. | | " | | |
| PATT. | | " | | |

H. G. FISCHER & CO.
2335 WABANSIA AVE.
CHICAGO, ILL.

CAT. NO.

PART NO. 9586 1/2

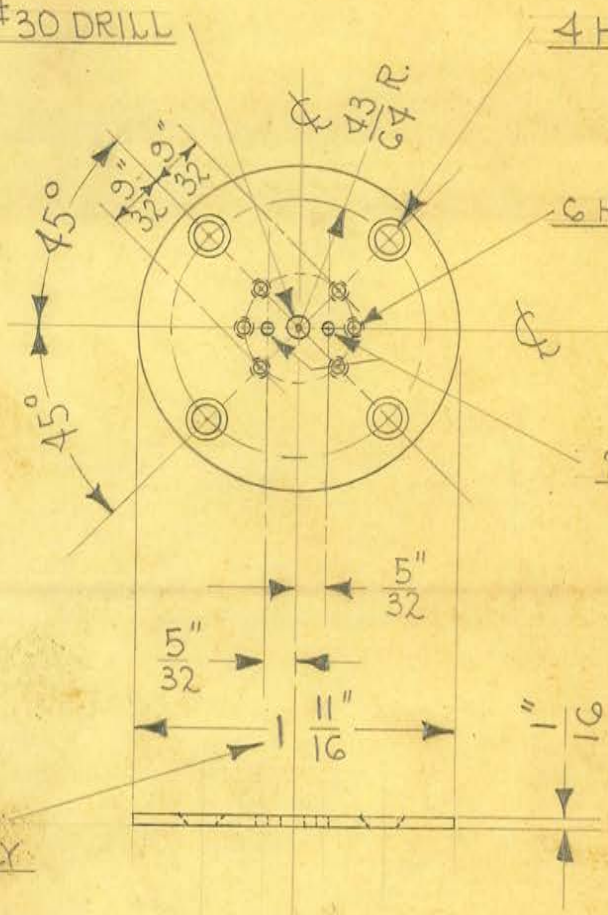


1 REQUIRED

OBSOLETE

| | | | | |
|---|---|---|---|---|
| SIZE | 1/16" FABRIC | ISSUE 8-30-35 | J.W. | TITLE: SHOCKPROOF DENTAL X X-RAY TUBE CAP CONN. INSULATOR |
| KIND | BASE BAKELITE | CHANGED 9-8-36 | H.E. | |
| SHAPE | SHEET | " | | |
| FINISH | | " | | |
| TEMP. | | " | | |
| PATT. | | " | | |

H. G. FISCHER & CO.
2335 WABANSIA AVE.
CHICAGO, ILL.

CAT. NO.

PART NO. 9586 3/4 A

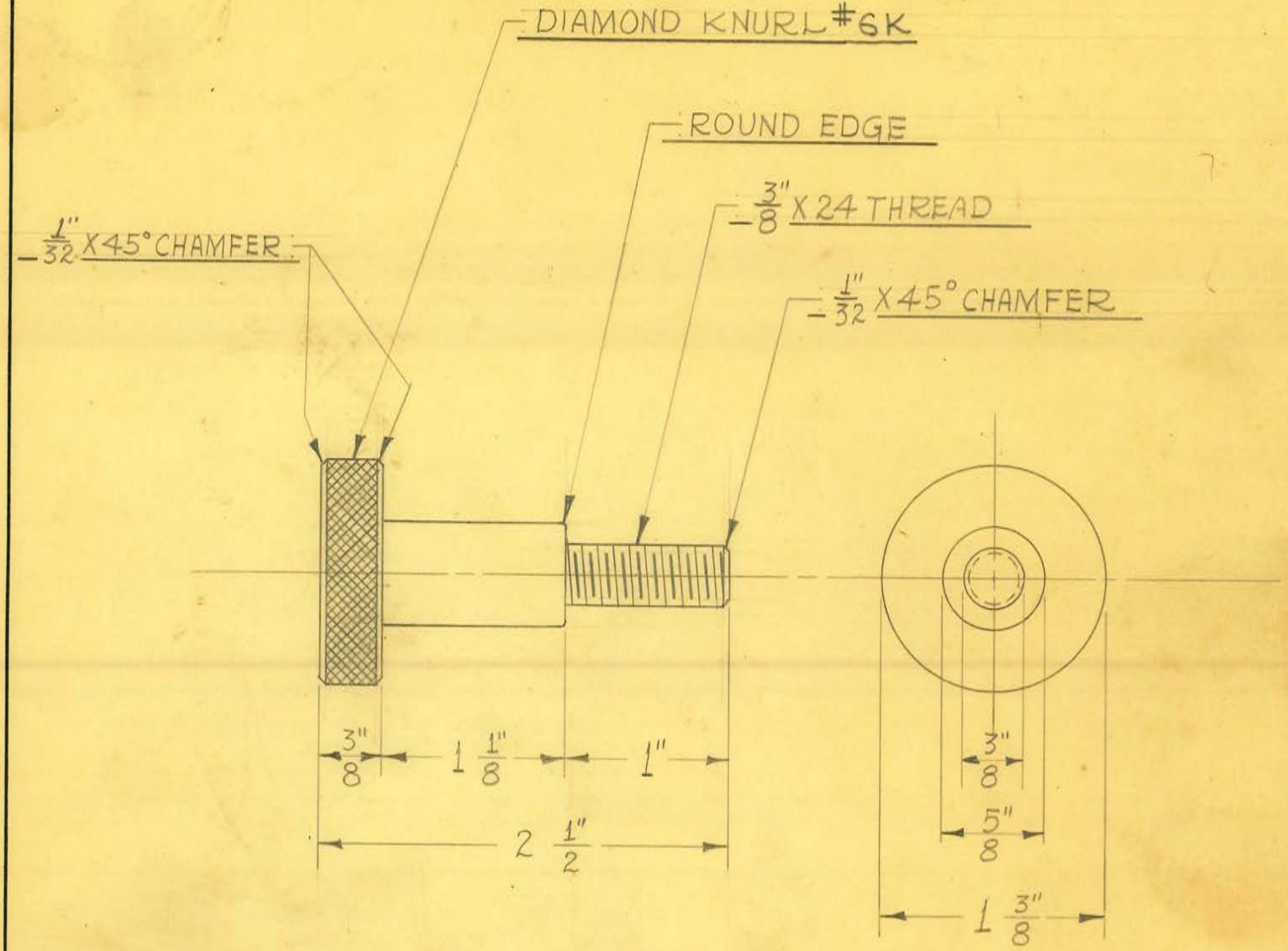


1 REQUIRED

OBSOLETE

Obsolete

| | | | | |
|---|---|---|---|---|
| SIZE | 1 3/8" DIA. | ISSUE 1-14-41 | J.V.W. | |
| KIND | C.R. STEEL | CHANGED | | |
| SHAPE | | " | | |
| FINISH | CHROME #2 | " | | |
| TEMP. | | " | | |
| PATT. | | " | | |

**TITLE:**
ARMY SHOCKPROOF DENTAL X-RAY UNIT
VERTICAL TUBE LOCK - THUMB SCREW

H. G. FISCHER & CO.
2335 WABANSIA AVE.
CHICAGO, ILL.

CAT. NO.

PART NO. 13724

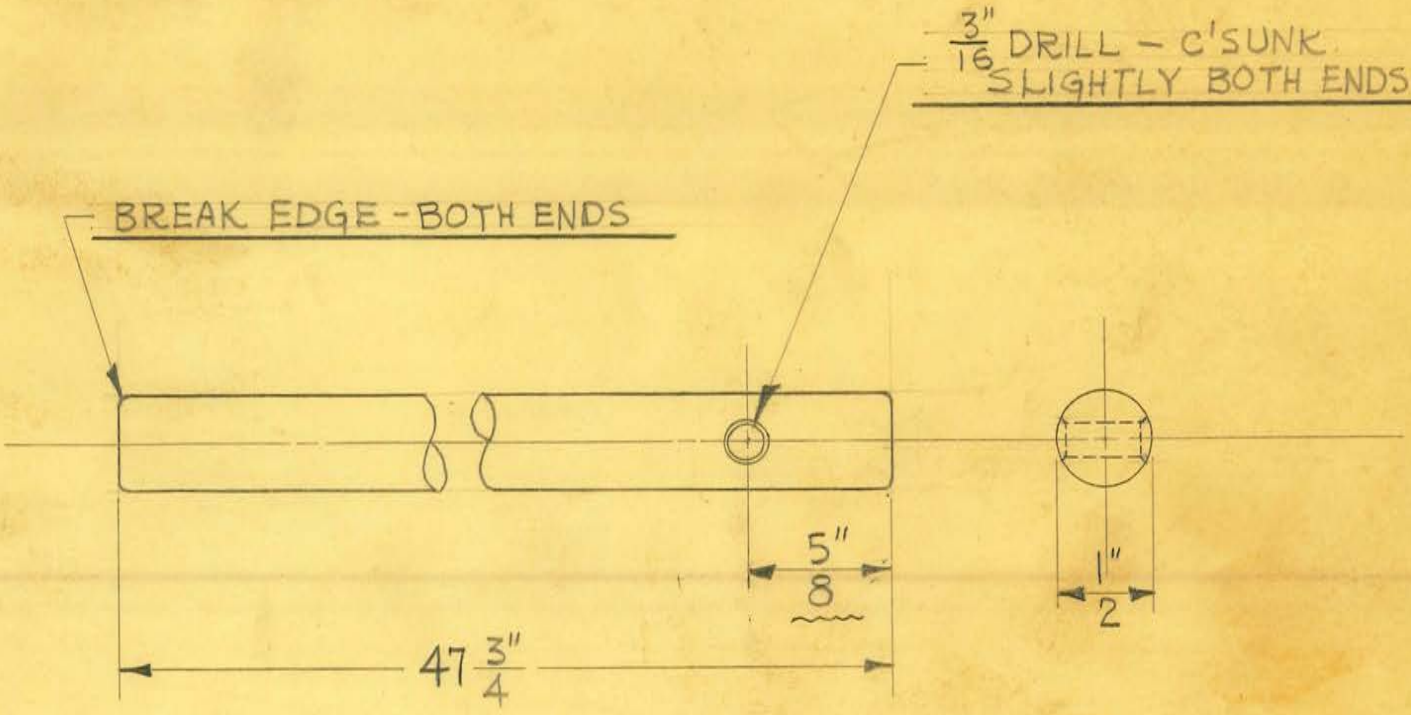


1 REQUIRED

OBSOLETE

Obsolete

| | | | |
|---|---|---|---|
| SIZE | 1/2" DIA. | ISSUE 8-5-41 | J.V.W |
| KIND | C.R. STEEL | CHANGED | |
| SHAPE | | " | |
| FINISH | CAD. #23 | " | |
| TEMP. | | " | |
| PATT. | | " | |

**TITLE:** U.S. ARMY SHOCKPROOF DENTAL X-RAY VERTICAL TUBE LOCK ROD

H. G. FISCHER & CO.
2335 WABANSIA AVE.
CHICAGO, ILL.

CAT. NO.

PART NO. 13725

2 ELONGNATED HOLES
#37 DRILL SIZE

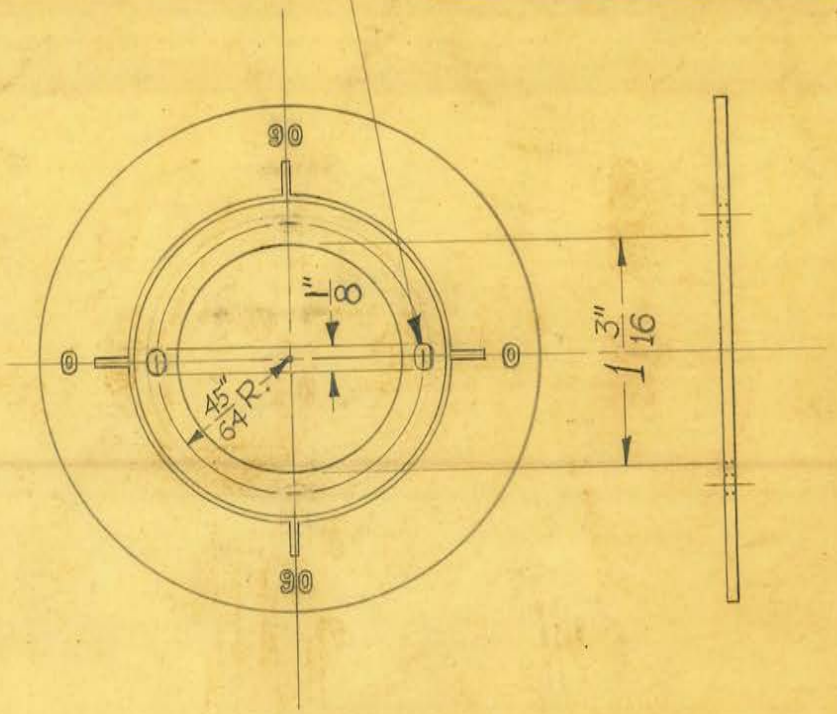


2 REQUIRED

OBSOLETE

| | | | |
|---|---|---|---|
| SIZE | FROM 12321 | ISSUE | J.V.W. |
| KIND | | CHANGED | |
| SHAPE | | " | |
| FINISH | | " | |
| TEMP. | | " | |
| PATT. | | " | |

**TITLE:** ARMY SHOCKPROOF DENTAL X-RAY UNIT
VERTICAL ANGLE PLATE - DRILLED

H. G. FISCHER & CO.
2335 WABANSIA AVE.
CHICAGO, ILL.

CAT. NO.

PART NO. 13726

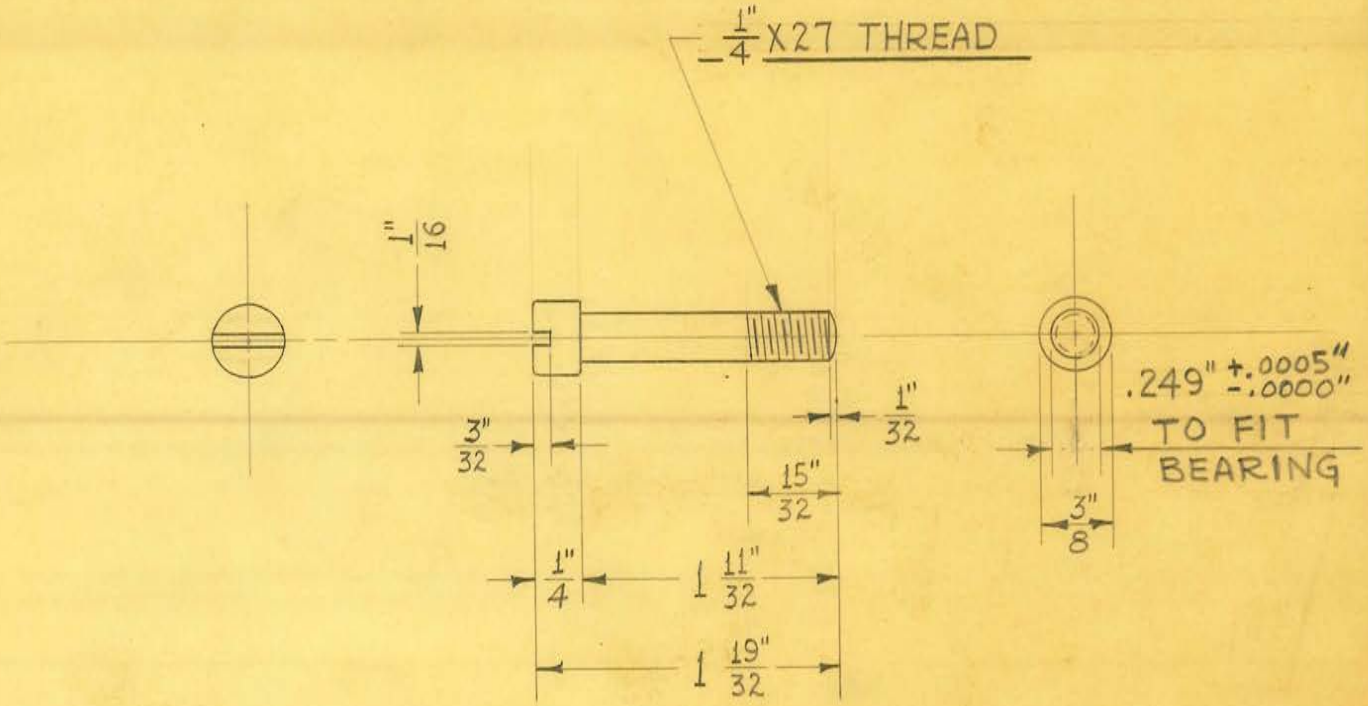


2 REQUIRED

OBSOLETE

| | | | |
|---|---|---|---|
| SIZE | 3/8" DIA. | ISSUE 1-21-41 | J.V.W. |
| KIND | DRILL ROD | CHANGED | |
| SHAPE | | " | |
| FINISH | | " | |
| TEMP. | | " | |
| PATT. | | " | |

**TITLE:** ARMY SHOCKPROOF DENTAL X-RAY UNIT
SWIVEL ARM SUPPORT - BEARING SHAFT SCREW

H. G. FISCHER & CO.
2338 WABANSIA AVE.
CHICAGO, ILL.

CAT. NO.

PART NO. 13727

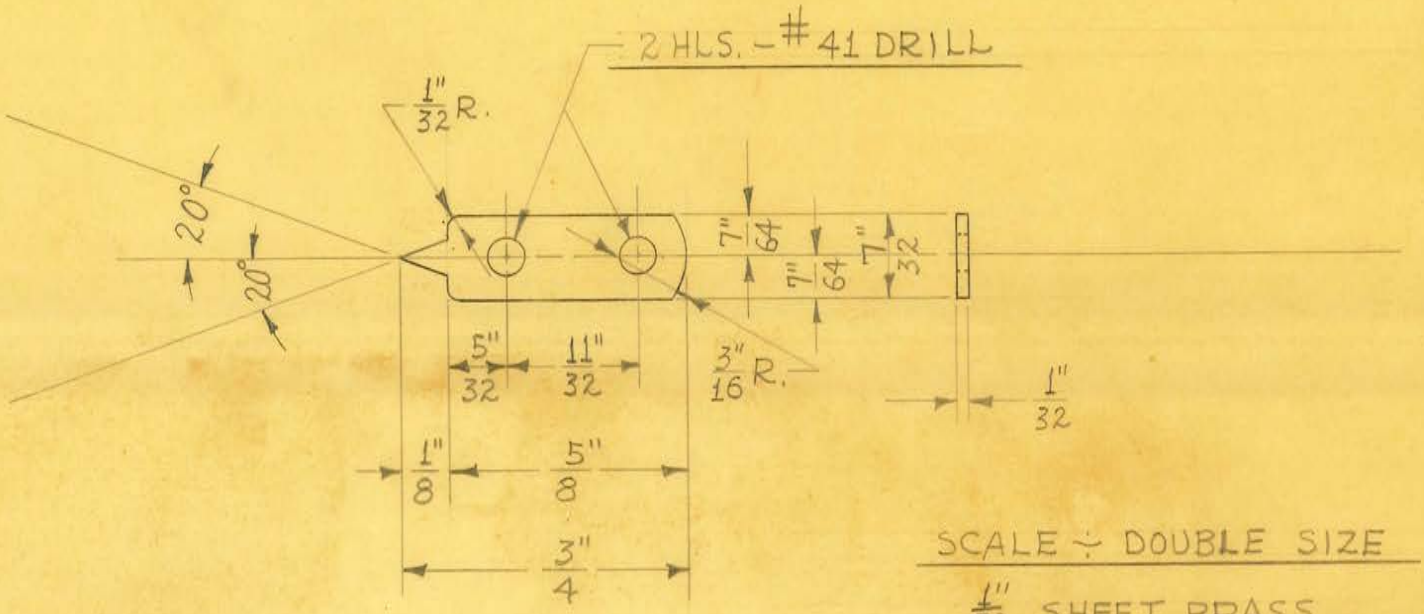


SCALE ÷ DOUBLE SIZE

1/32 SHEET BRASS

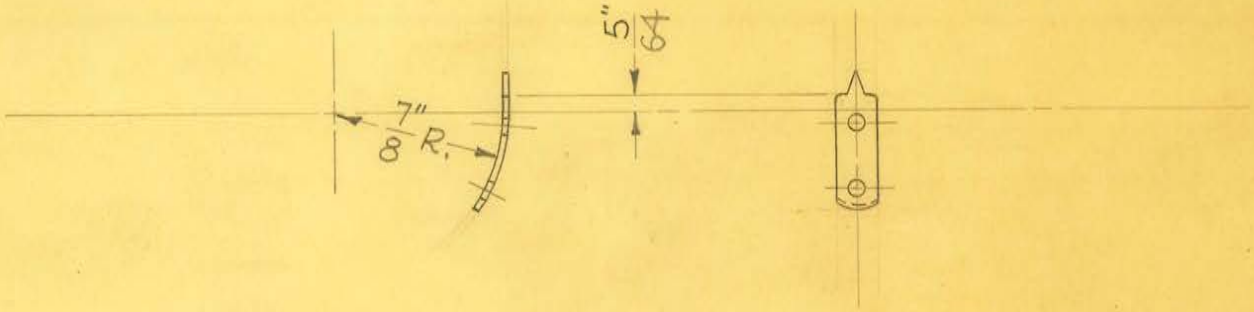


OBSOLETE

1 REQUIRED

| | | | |
|---|---|---|---|
| SIZE | 1/32" SHEET | ISSUE 1-27-41 | J.V.W. |
| KIND | BRASS | CHANGED | |
| SHAPE | | " | |
| FINISH | RED #87 | " | |
| TEMP. | | " | |
| PATT. | | " | |

**TITLE:** ARMY SHOCKPROOF DENTAL X-RAY UNIT
HORIZONTAL ANGLE INDICATOR

H. G. FISCHER & CO.
2335 WABANSIA AVE.
CHICAGO, ILL.

CAT. NO.

PART NO. 13728

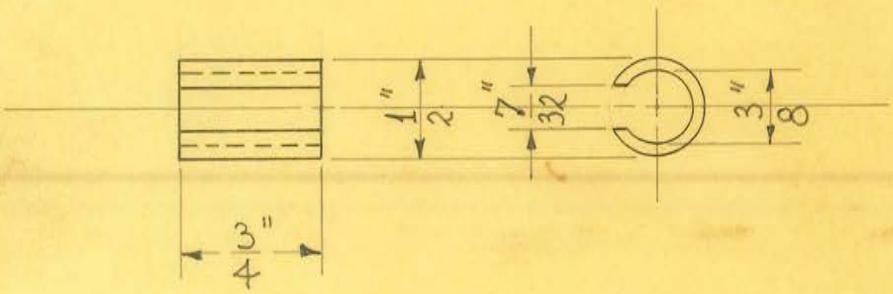


2 REQUIRED

OBSOLETE

| | | | |
|---|---|---|---|
| SIZE | 1/2" O.D. X 3/8" I.D. | ISSUE 1-5-43 | H.E. |
| KIND | BLACK FIBRE | CHANGED | |
| SHAPE | TUBING | " | |
| FINISH | | " | |
| TEMP. | | " | |
| PATT. | | " | |

**TITLE:** ARMY SHOCKPROOF DENTAL X-RAY UNIT-
TRANS. MTG. FORK CABLE CLAMP

H. G. FISCHER & CO.
2335 WABANSIA AVE.
CHICAGO, ILL.

CAT. NO.

PART NO. 13729

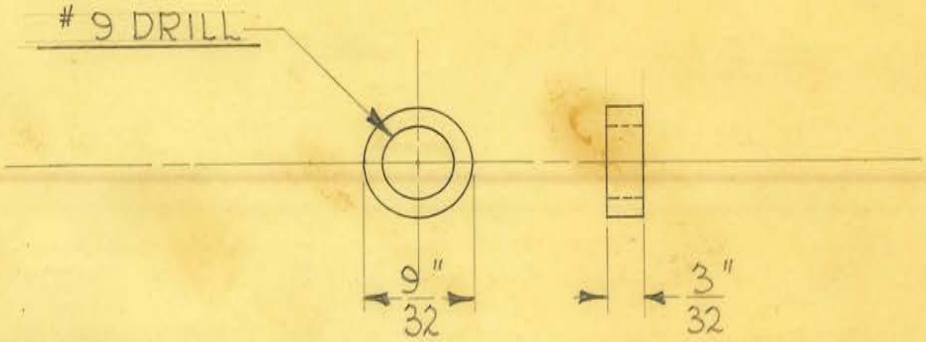


SCALE: 1" = 1/2"

2 REQUIRED

OBSOLETE

| | | | |
|---|---|---|---|
| SIZE | | ISSUE 9-4-41 | H. |
| KIND | C.R.STEEL | CHANGED | |
| SHAPE | | " | |
| FINISH | CAD. #23 | " | |
| TEMP. | | " | |
| PATT. | | " | |

**TITLE:** U.S. ARMY DENTAL X-RAY UNIT - WHEEL LOCK - LOCK PLATE BUSHING

H. G. FISCHER & CO.
2335 WABANSIA AVE.
CHICAGO, ILL.

CAT. NO.

PART NO. 13730

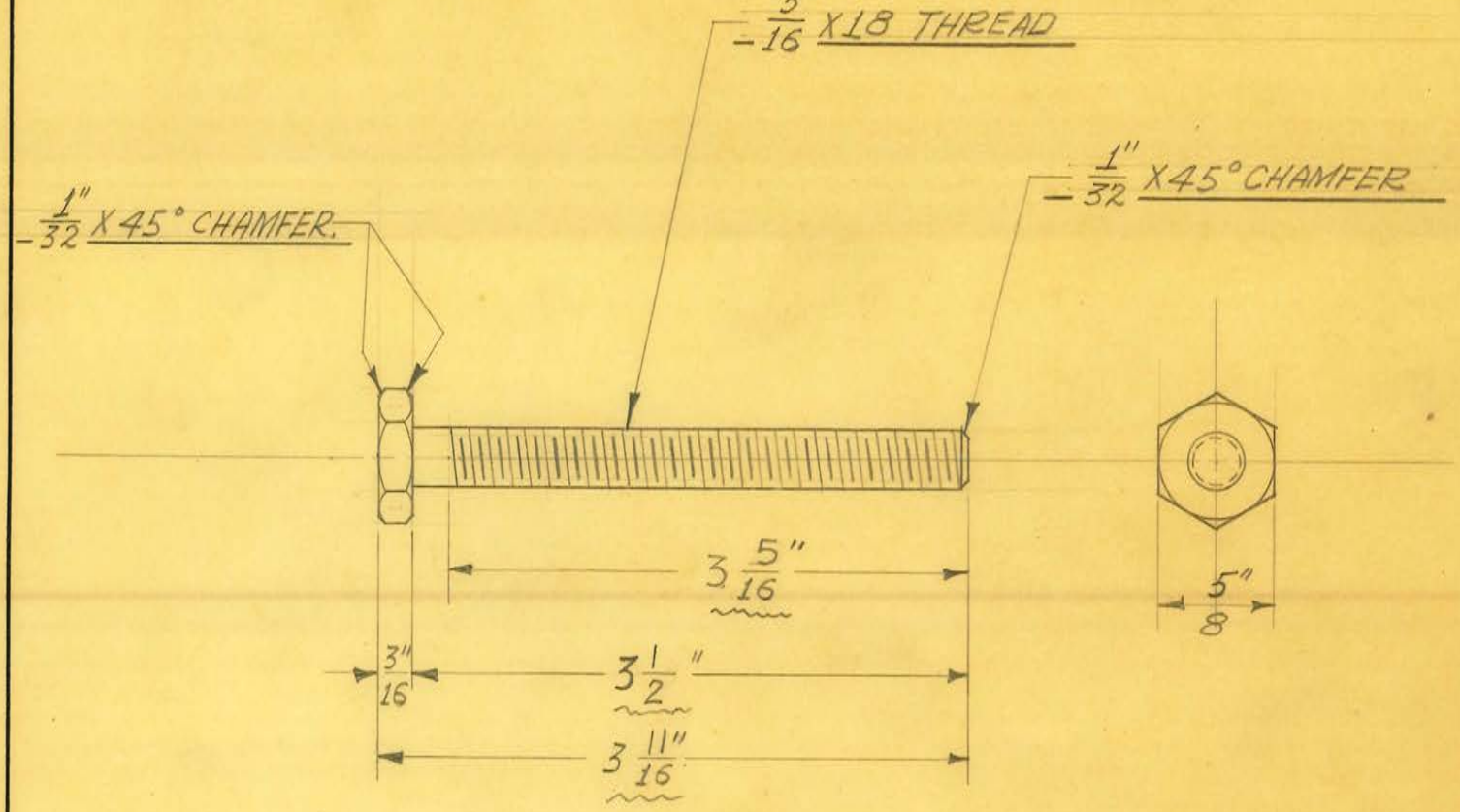


2 REQUIRED

OBSOLETE

| | | | |
|---|---|---|---|
| SIZE | 5/8" HEX. | ISSUE 12-5-40 | J.V.W. |
| KIND | C.R. STEEL | CHANGED | |
| SHAPE | | " | |
| FINISH | | " | |
| TEMP. | | " | |
| PATT. | | " | |

**TITLE:** U.S.A. SHOCKPROOF DENTAL X-RAY COUNTERBALANCE SPRING ADJ. SCREW.

H. G. FISCHER & CO.
2338 WABANSIA AVE.
CHICAGO, ILL.

CAT. NO.

PART NO. 13731

5 THREADS PER INCH
CUT THREAD WITH A NO. 1-10 D.P.
CUTTER, USING TOOL

BREAK CORNERS

5/16" X 18 TAP C'SUNK. 3/8" TO FACE - BOTH ENDS

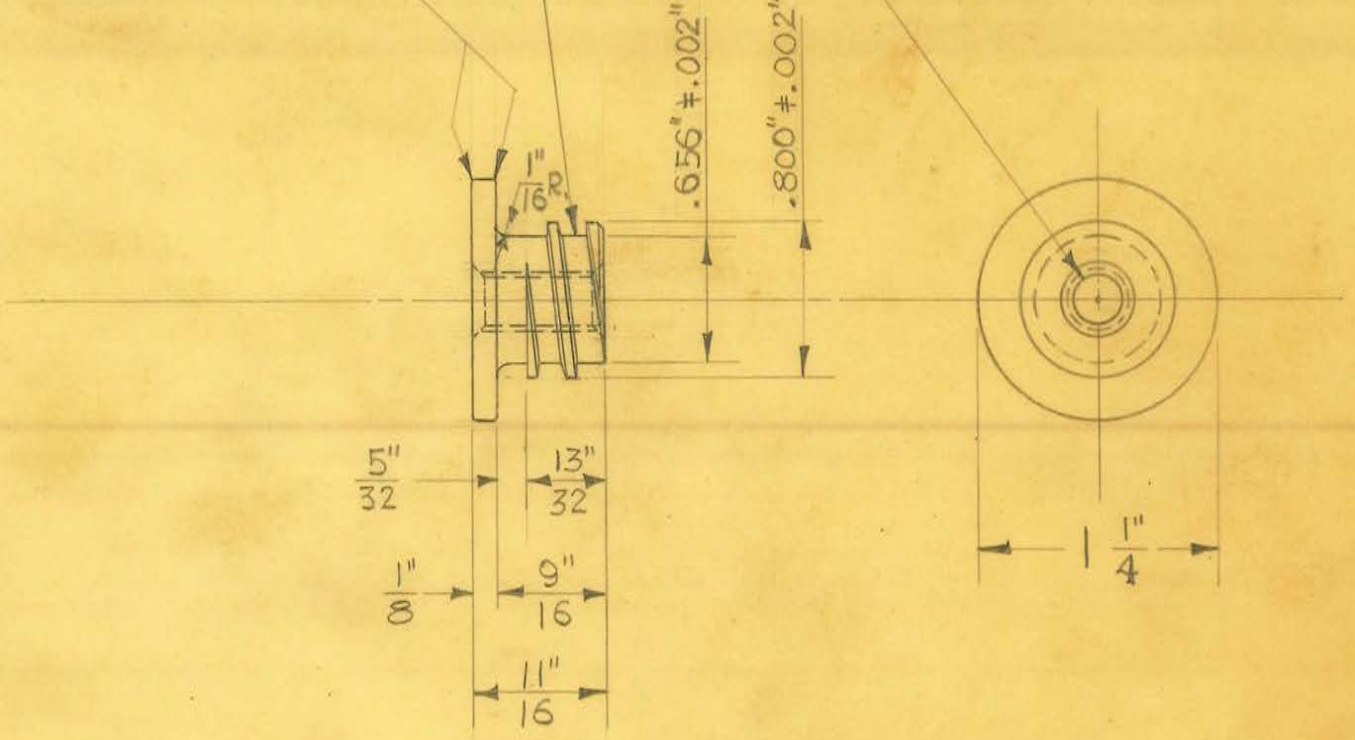


2 REQUIRED

OBSOLETE

| | | | |
|---|---|---|---|
| SIZE | 1 1/4" DIA. | ISSUE 2-14-41 | J.V.W. |
| KIND | C.R. STEEL | CHANGED | |
| SHAPE | | " | |
| FINISH | | " | |
| TEMP. | | " | |
| PATT. | | " | |

**TITLE:**
ARMY SHOCKPROOF DENTAL X-RAY UNIT
COUNTERBALANCE SPRING SUPPORT PLUG

H. G. FISCHER & CO.
2335 WABANSIA AVE.
CHICAGO, ILL.

CAT. NO.

PART NO. 13732

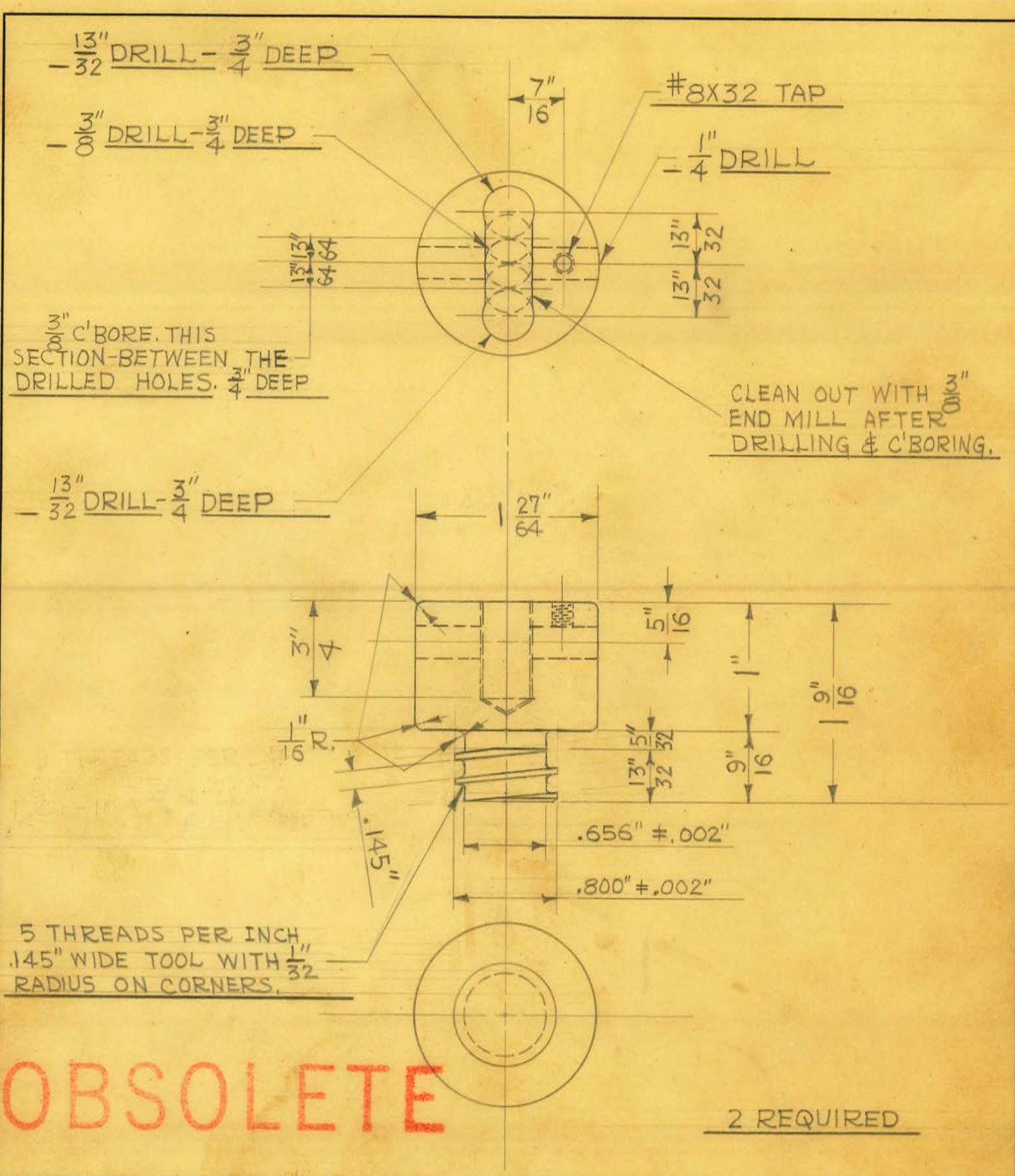


OBSOLETE

2 REQUIRED

| | | | |
|---|---|---|---|
| SIZE | 1 7/16" DIA. | ISSUE 2-13-41 | J.V.W. |
| KIND | C.R. STEEL | CHANGED 5-12-42 | J.V.W. |
| SHAPE | | " | |
| FINISH | | " | |
| TEMP. | | " | |
| PATT. | | " | |

**TITLE:** ARMY SHOCKPROOF DENTAL X-RAY UNIT
COUNTERBALANCE SPRING PLUNGER

H. G. FISCHER & CO.
2335 WABANSIA AVE.
CHICAGO, ILL.

CAT. NO.

PART NO. 13733

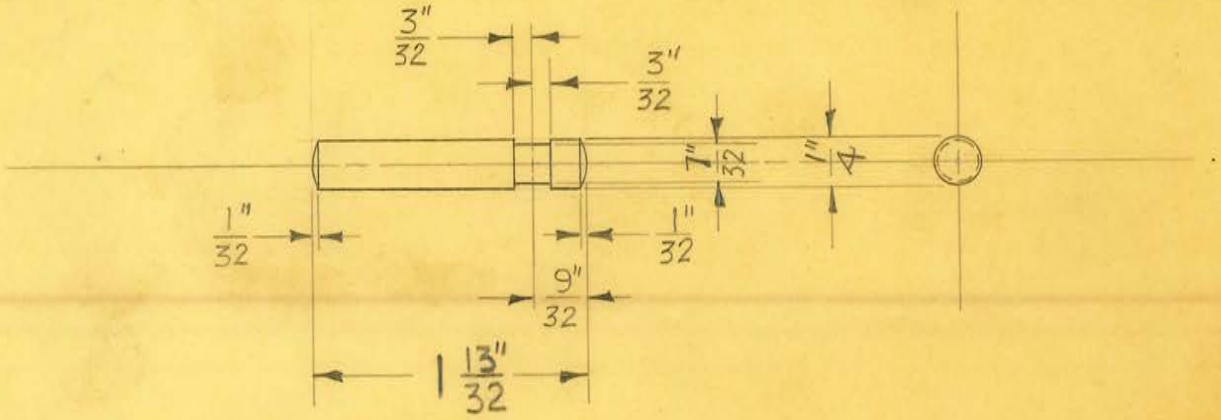


2 REQUIRED

OBSOLETE

| | | | | |
|---|---|---|---|---|
| SIZE | 1/4" DIA. | ISSUE 2-14-41 | J.V.W. | **TITLE:** ARMY SHOCKPROOF DENTAL X-RAY UNIT COUNTERBALANCE SPRING PLUNGER SHAFT |
| KIND | C.R. STEEL | CHANGED 5-13-42 | J.V.W. | |
| SHAPE | | " | | |
| FINISH | | " | | |
| TEMP. | | " | | |
| PATT. | | " | | |

H. G. FISCHER & CO.
2335 WABANSIA AVE.
CHICAGO, ILL.

CAT. NO.

PART NO. 13735

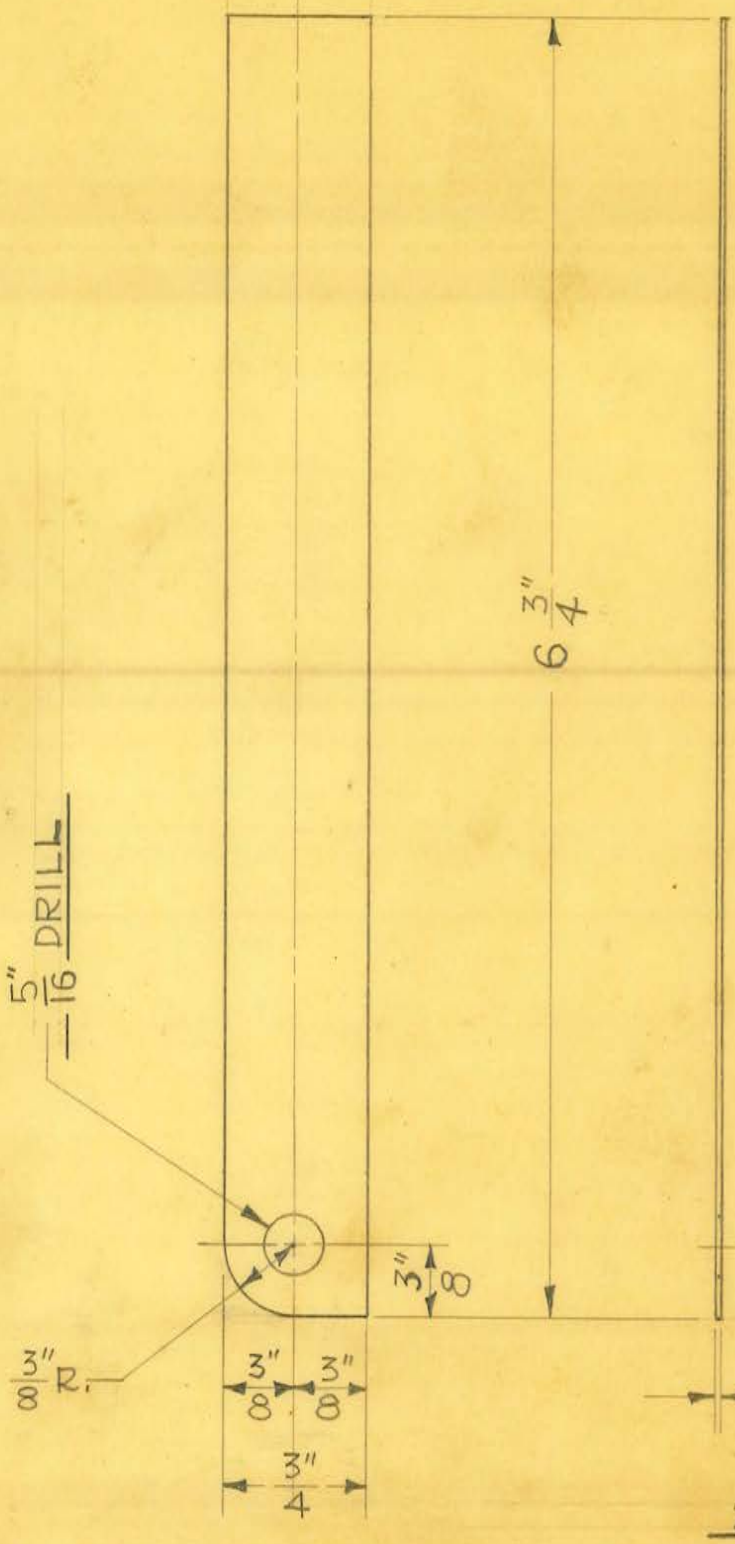


OBSOLETE

Obsolete

220 REQUIRED

| | | | |
|---|---|---|---|
| SIZE | #26 GA. | ISSUE 5-29-41 | J.V.W. |
| KIND | ELECT. STEEL | CHANGED | |
| SHAPE | | " | |
| FINISH | | " | |
| TEMP. | | " | |
| PATT. | | " | |

**TITLE:**
U.S.A. SHOCKPROOF DENTAL X-RAY
POWER TRANSF. STEEL - SIDE PIECE

H. G. FISCHER & CO.
2335 WABANSIA AVE.
CHICAGO, ILL.

CAT. NO.

PART NO. 13736

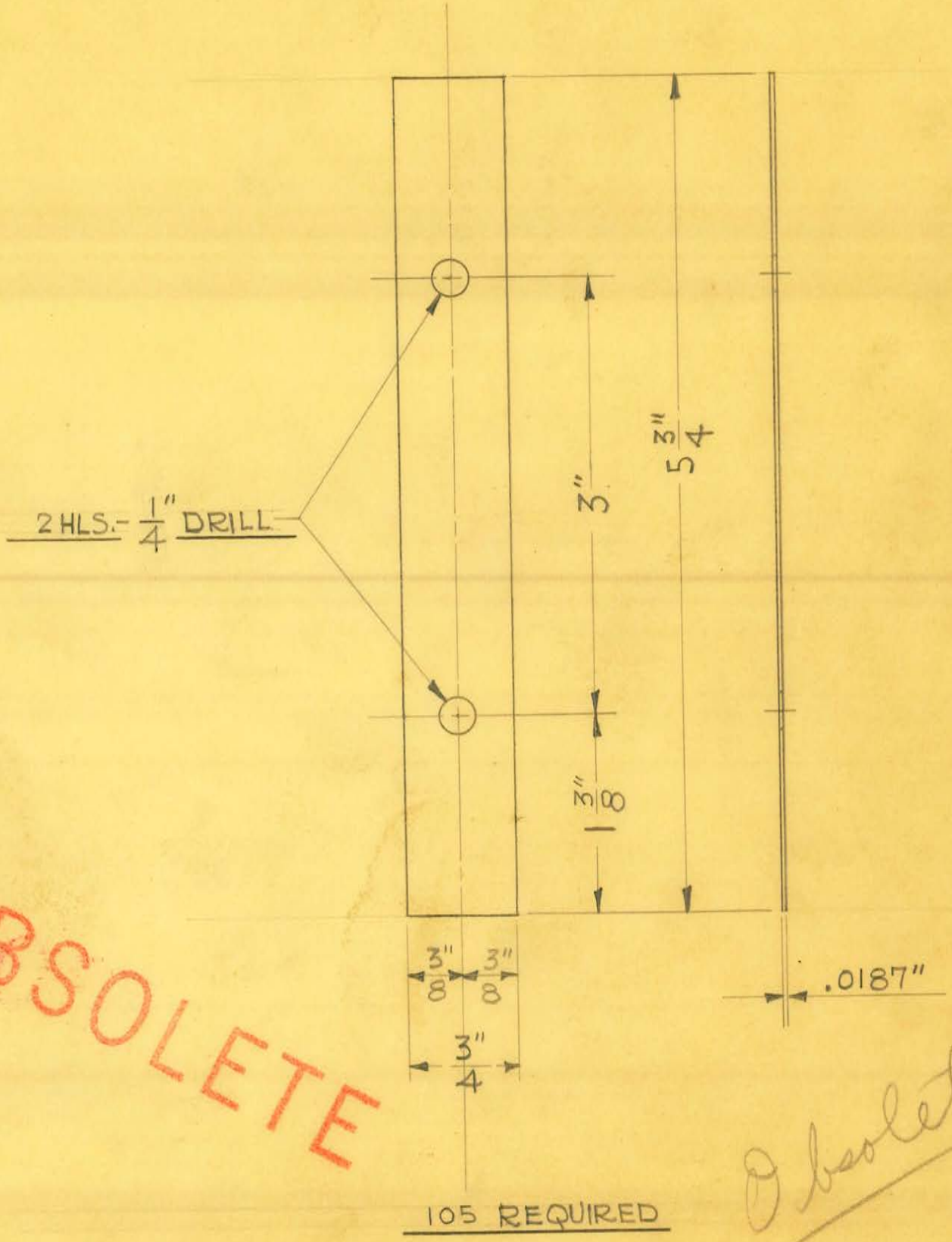


OBSOLETE

Obsolete

105 REQUIRED

| | | | |
|---|---|---|---|
| SIZE | #26 GA. | ISSUE 5-28-41 | J.V.W. |
| KIND | ELECT. STEEL | CHANGED | |
| SHAPE | | " | |
| FINISH | | " | |
| TEMP. | | " | |
| PATT. | | " | |

**TITLE:**
U.S.A. SHOCKPROOF DENTAL X-RAY UNIT
POWER TRANSF. STEEL-END PIECE - 5 3/4"

H. G. FISCHER & CO.
2335 WABANSIA AVE.
CHICAGO, ILL.

CAT. NO.

PART NO. 13737

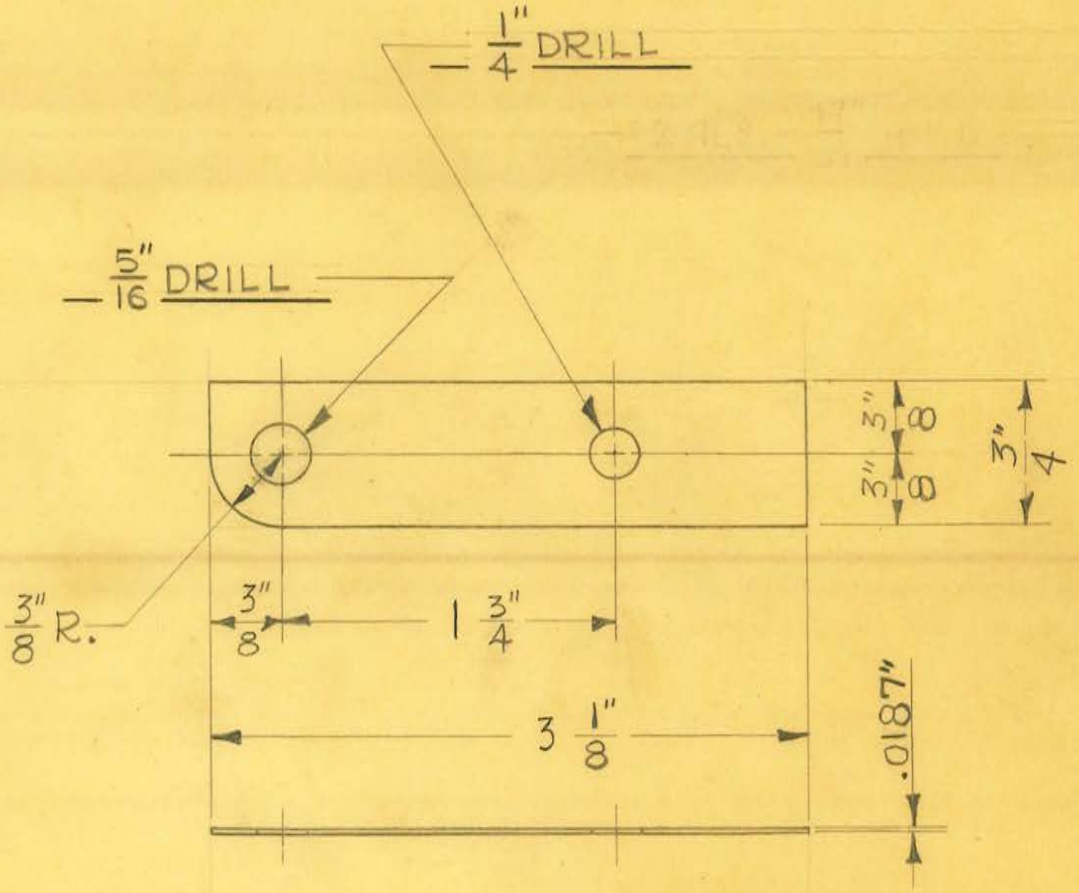


OBSOLETE

35 REQUIRED

Obsolete

| | | | |
|---|---|---|---|
| SIZE | #26 GA. | ISSUE 5-27-41 | J.V.W. |
| KIND | ELECT. STEEL | CHANGED | |
| SHAPE | | " | |
| FINISH | | " | |
| TEMP. | | " | |
| PATT. | | " | |

**TITLE:** U.S.A. SHOCKPROOF DENTAL X-RAY UNIT POWER TRANSF. STEEL—ENP PIECE 3 1/8"

H. G. FISCHER & CO.
2338 WABANSIA AVE.
CHICAGO, ILL.

CAT. NO.

PART NO. 13738

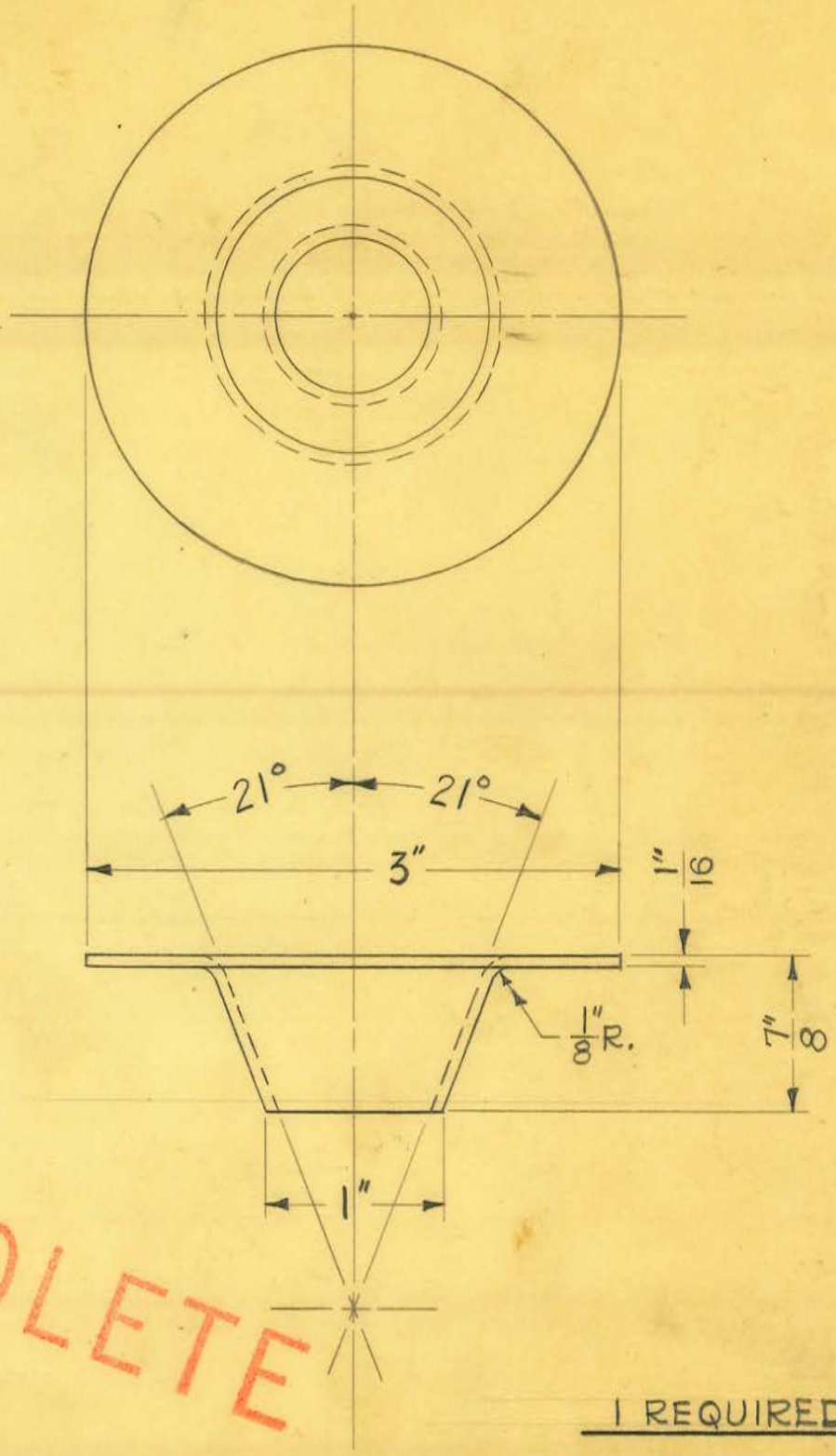


OBSOLETE

1 REQUIRED

| | | | |
|---|---|---|---|
| SIZE | FROM 13739 | ISSUE 2-23-42 | J.V.W. |
| KIND | | CHANGED | |
| SHAPE | | " | |
| FINISH | | " | |
| TEMP. | | " | |
| PATT. | | " | |

**TITLE:**
ARMY SHOCKPROOF DENTAL X-RAY UNIT
X-RAY SHIELD CONE

H. G. FISCHER & CO.
2335 WABANSIA AVE.
CHICAGO, ILL.

CAT. NO.

PART NO. 13739 1/2

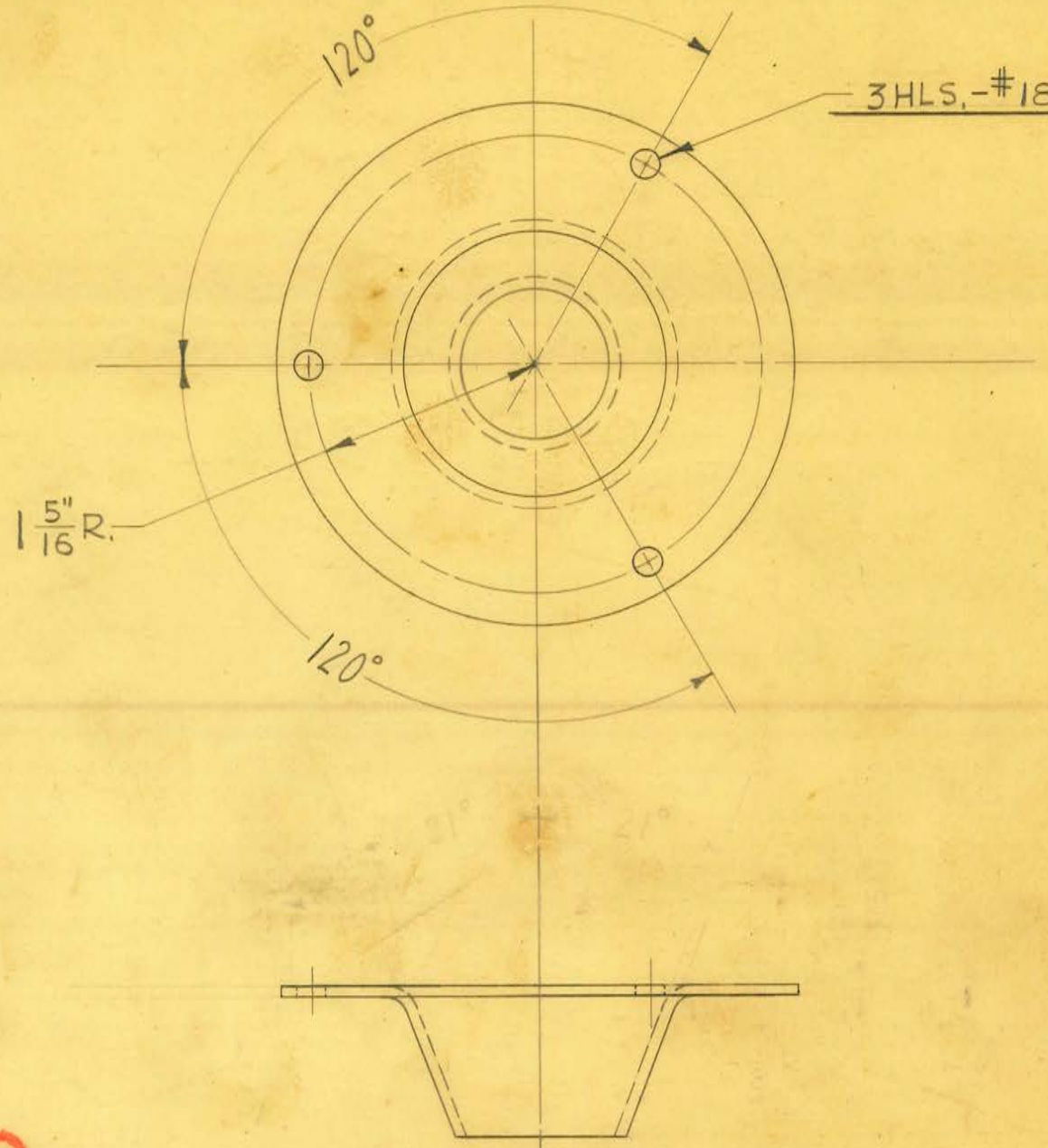


OBSOLETE

1 REQUIRED

| | | | |
|---|---|---|---|
| SIZE | FROM 13739 1/2 | ISSUE 1-30-41 | J.V.W. |
| KIND | | CHANGED | |
| SHAPE | | " | |
| FINISH | | " | |
| TEMP. | | " | |
| PATT. | | " | |

**TITLE:**
ARMY SHOCKPROOF DENTAL X-RAY UNIT
X-RAY SHIELD CONE (DRILLED)

H. G. FISCHER & CO.
2338 WABANSIA AVE.
CHICAGO, ILL.

CAT. NO.

PART NO. 13739 1/2 F

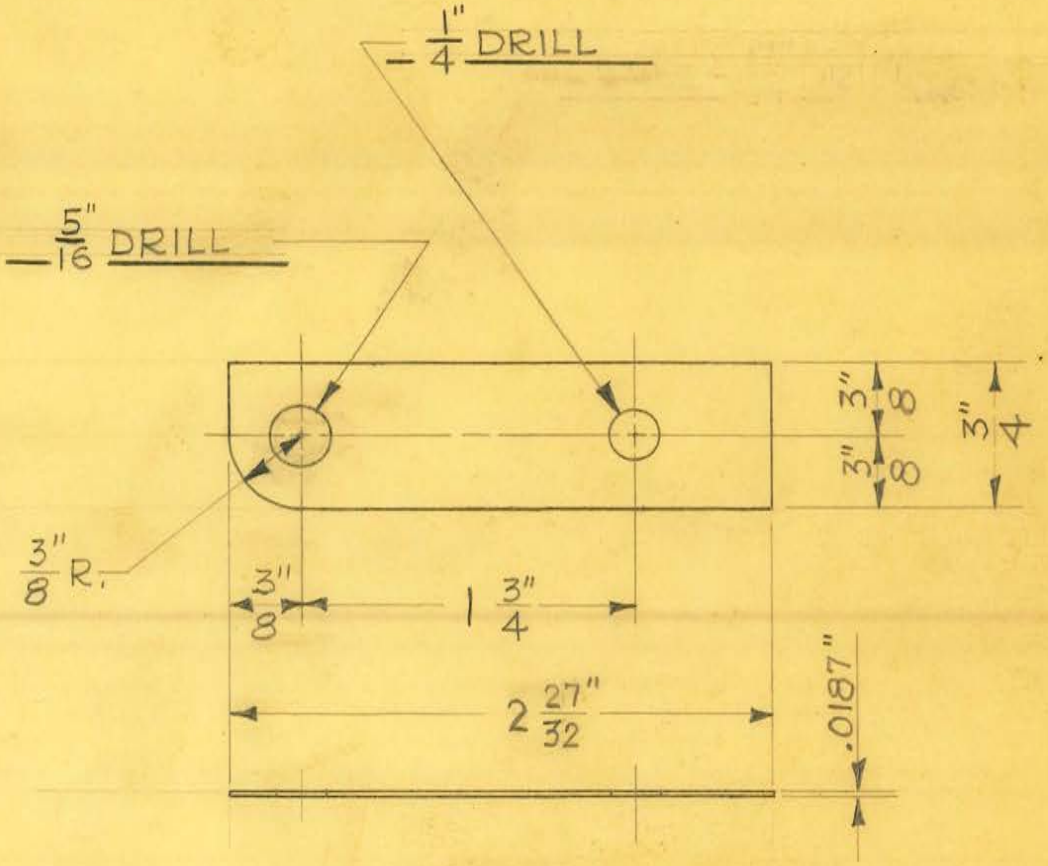


35 REQUIRED

OBSOLETE

Obsolete

| | | | |
|---|---|---|---|
| SIZE | # 26 GA. | ISSUE 5-27-41 | J.V.W. |
| KIND | ELECT. STEEL | CHANGED | |
| SHAPE | | " | |
| FINISH | | " | |
| TEMP. | | " | |
| PATT. | | " | |

**TITLE:** U.S.A. SHOCKPROOF DENTAL X-RAY UNIT
POWER TRANSF. STEEL-END PIECE 2 27/32

H. G. FISCHER & CO.
2335 WABANSIA AVE.
CHICAGO, ILL.

CAT. NO.

PART NO. 13740

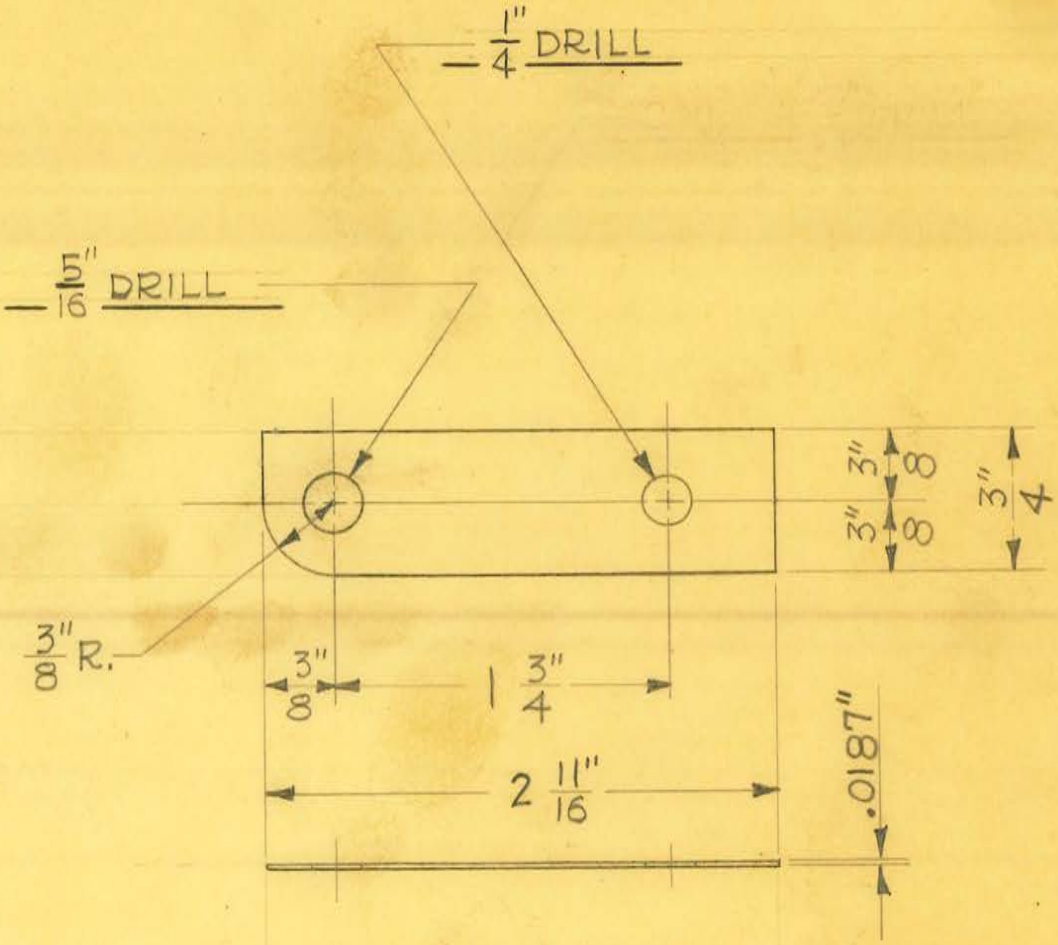


35 REQUIRED

OBSOLETE

Obsolete

| | | | |
|---|---|---|---|
| SIZE | #26 GA. | ISSUE 5-27-41 | J.V.W |
| KIND | ELECT. STEEL | CHANGED | |
| SHAPE | | " | |
| FINISH | | " | |
| TEMP. | | " | |
| PATT. | | " | |

**TITLE:**
U.S.A. SHOCKPROOF DENTAL X-RAY UNIT
POWER TRANSF. STEEL - END PIECE - 2 11/16"

H. G. FISCHER & CO.
2335 WABANSIA AVE.
CHICAGO, ILL.

CAT. NO.

PART NO. 13741

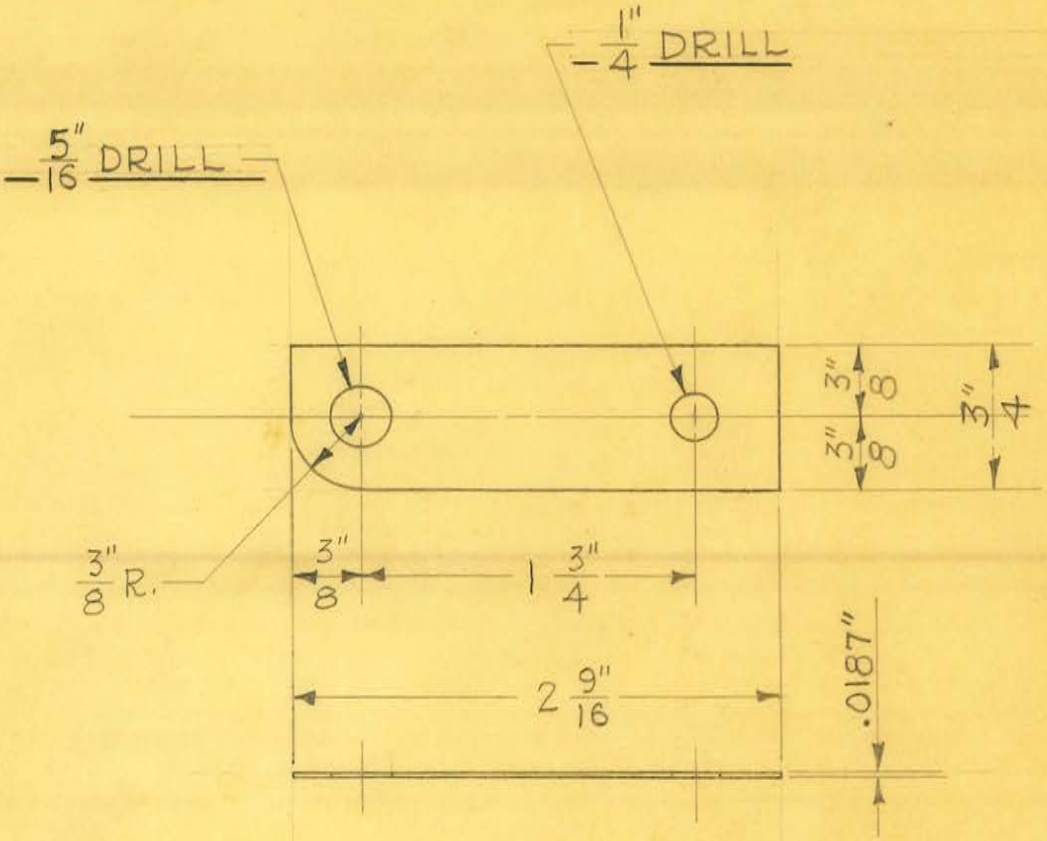


100 REQUIRED

OBSOLETE

Obsolete

| | | | |
|---|---|---|---|
| SIZE | #26 GA. | ISSUE 5-29-41 | J.V.W. |
| KIND | ELECT. STEEL | CHANGED | |
| SHAPE | | " | |
| FINISH | | " | |
| TEMP. | | " | |
| PATT. | | " | |

**TITLE:** U.S.A. SHOCKPROOF DENTAL X-RAY POWER TRANSF. STEEL - END PIECE — 2 9/16

H. G. FISCHER & CO.
2335 WABANSIA AVE.
CHICAGO, ILL.

CAT. NO.

PART NO. 13742

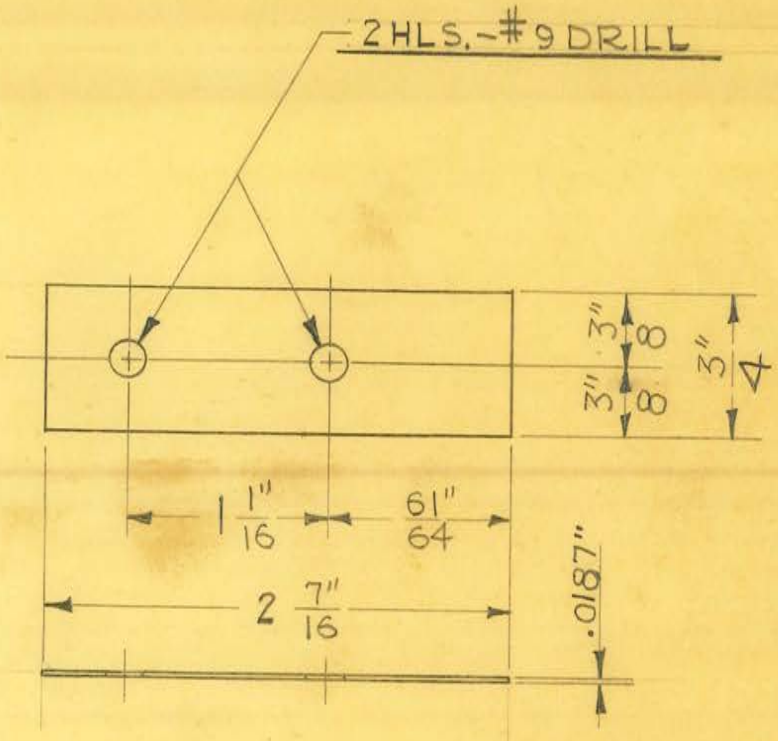


16 REQUIRED

OBSOLETE

Obsolete

| | | | | |
|---|---|---|---|---|
| SIZE | #26 GA. | ISSUE 5-29-31 | J.V.W. | TITLE: U.S.A. SHOCKPROOF DENTAL X-RAY FILAMENT TRANSF. STEEL - END PIECE TOP |
| KIND | ELECT. STEEL | CHANGED | | |
| SHAPE | | " | | |
| FINISH | | " | | |
| TEMP. | | " | | |
| PATT. | | " | | |

H. G. FISCHER & CO.
2338 WABANSIA AVE.
CHICAGO, ILL.

CAT. NO.

PART NO. 13743

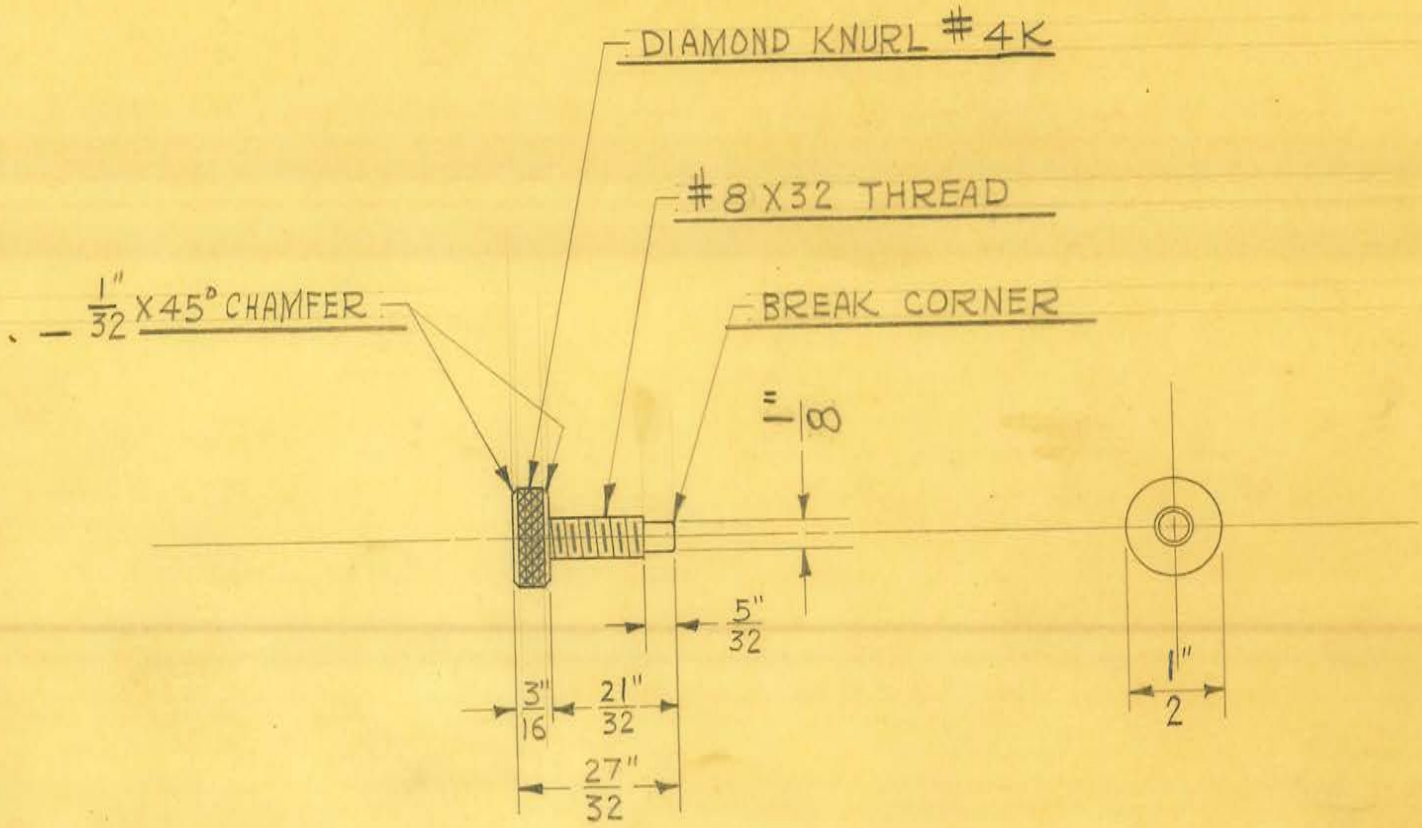


1 REQUIRED

OBSOLETE

| | | | |
|---|---|---|---|
| SIZE | ½" DIA. | ISSUE 1-31-41 | J.V.W. |
| KIND | BRASS ROD | CHANGED | |
| SHAPE | | " | |
| FINISH | CHR.#2 POLISH TOP OF HEAD | " | |
| TEMP. | | " | |
| PATT. | | " | |

**TITLE:** ARMY SHOCKPROOF DENTAL X-RAY UNIT
RADIOGRAPHIC CONE ADJUSTABLE TUBE-THUMB SCREW

H. G. FISCHER & CO.
2335 WABANSIA AVE.
CHICAGO, ILL.

CAT. NO.

PART NO. 13744

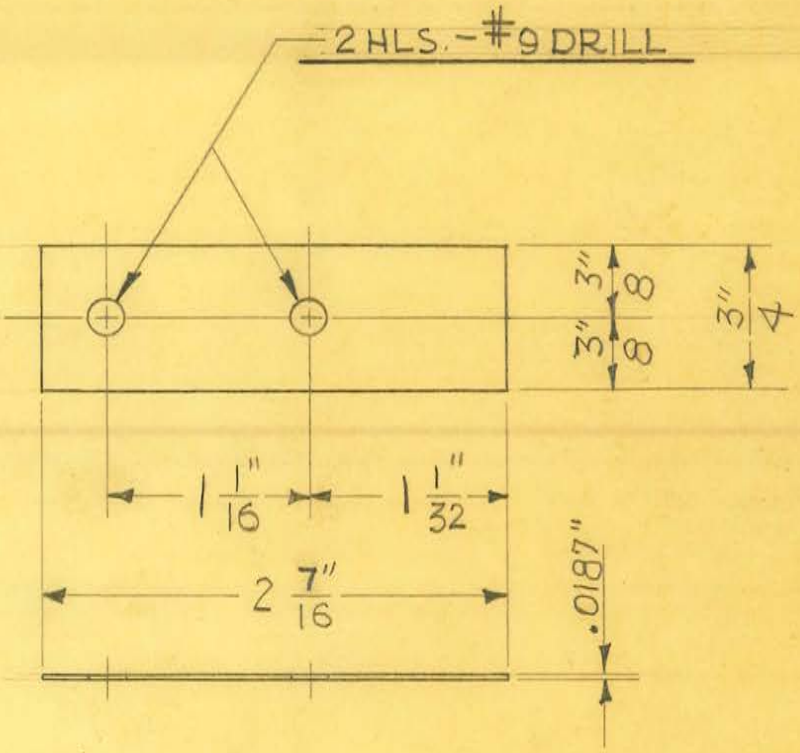


24 REQUIRED

OBSOLETE

Obsolete

| | | | | |
|---|---|---|---|---|
| SIZE | #26 GA. | ISSUE 5-29-41 | J.V.W. | TITLE: U.S.A SHOCKPROOF DENTAL X-RAY FILAMENT TRANSF. STEEL - END PIECE INTERMEDIATE |
| KIND | ELECT. STEEL | CHANGED | | |
| SHAPE | | " | | |
| FINISH | | " | | |
| TEMP. | | " | | |
| PATT. | | " | | |

H. G. FISCHER & CO.
2335 WABANSIA AVE.
CHICAGO, ILL.

CAT. NO.

PART NO. 13745

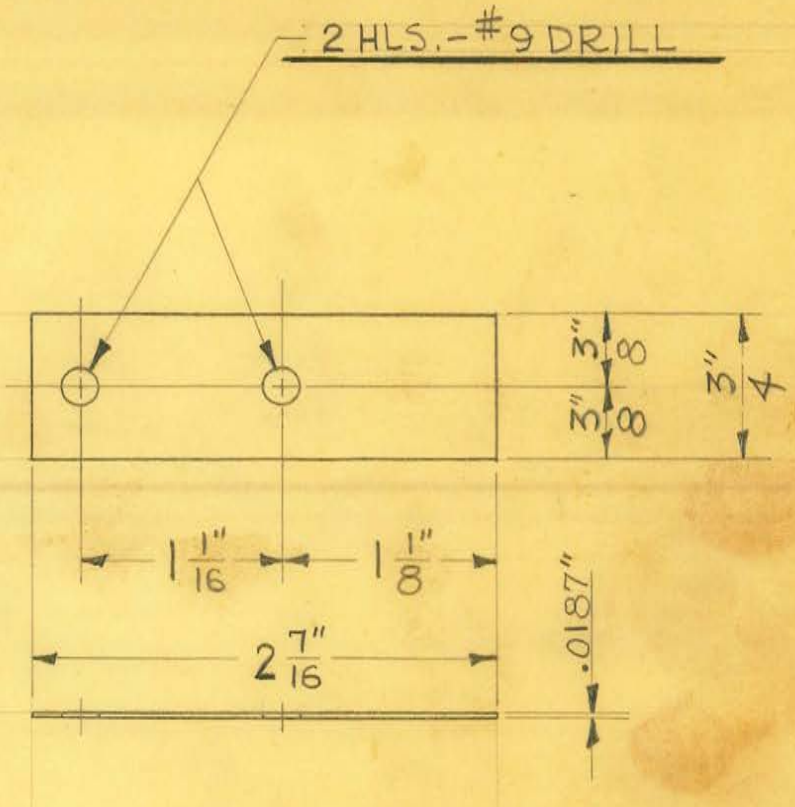


48 REQUIRED

OBSOLETE

Obsolete

| | | | | |
|---|---|---|---|---|
| SIZE | #26 GA. | ISSUE 5-29-41 | J.V.W. | TITLE: U.S.A. SHOCKPROOF DENTAL X-RAY FILAMENT TRANSF. STEEL - END PIECE - CENTER |
| KIND | ELECT. STEEL | CHANGED | | |
| SHAPE | | " | | |
| FINISH | | " | | |
| TEMP. | | " | | |
| PATT. | | " | | |

H. G. FISCHER & CO.
2335 WABANSIA AVE.
CHICAGO, ILL.

CAT. NO.

PART NO. 13746

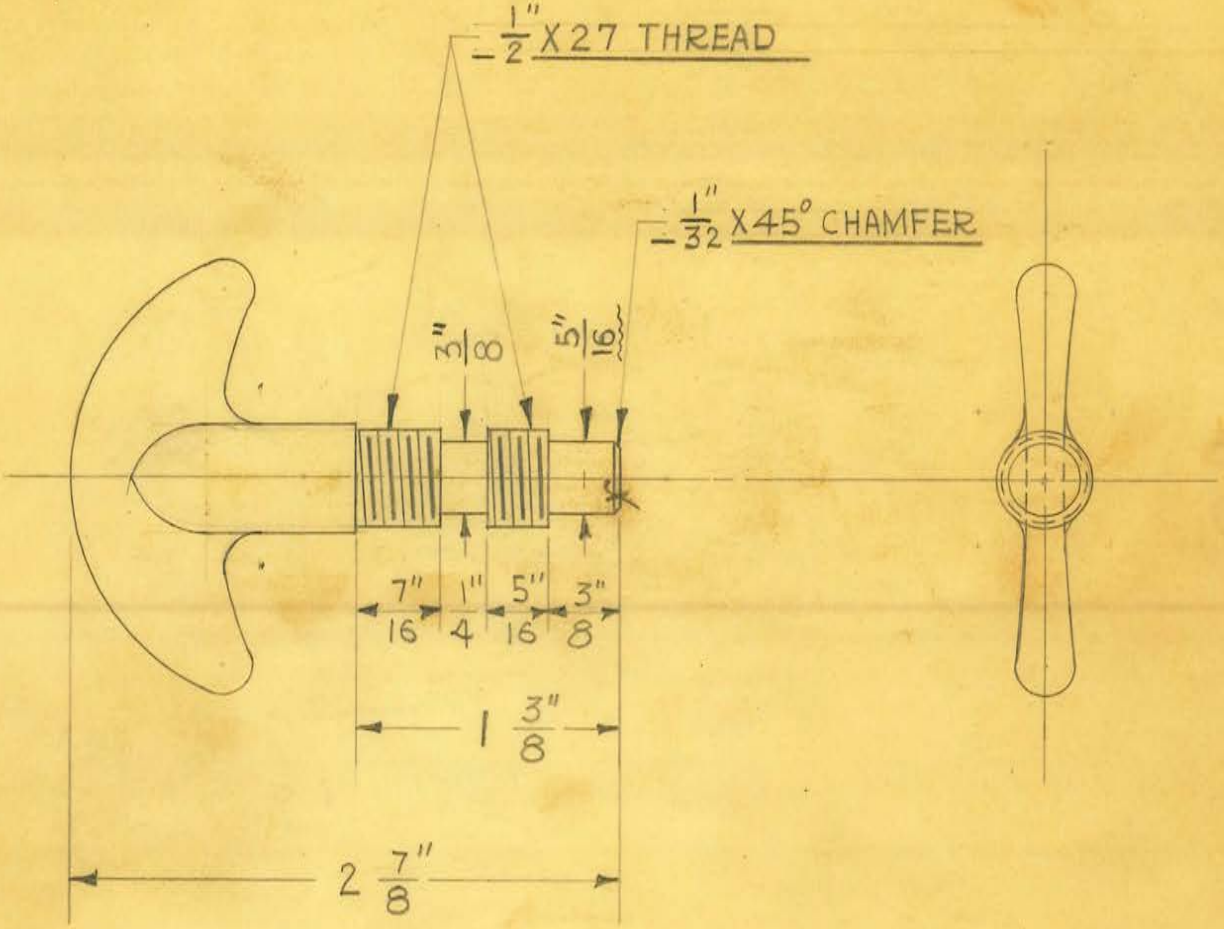


1 REQUIRED

OBSOLETE

| | | | |
|---|---|---|---|
| SIZE | 80-10-10 | ISSUE 4-3-41 | J.V.W. |
| KIND | BRONZE CASTING | CHANGED | |
| SHAPE | | " | |
| FINISH | CHR. #2 | " | |
| TEMP. | | " | |
| PATT. | 1734 | " | |

**TITLE:**
U.S.A. SHOCKPROOF DENTAL X-RAY UNIT
UPRIGHT TUBE-SWIVEL WING SCREW

H. G. FISCHER & CO.
2335 WABANSIA AVE.
CHICAGO, ILL.

CAT. NO.

PART NO. 13753F

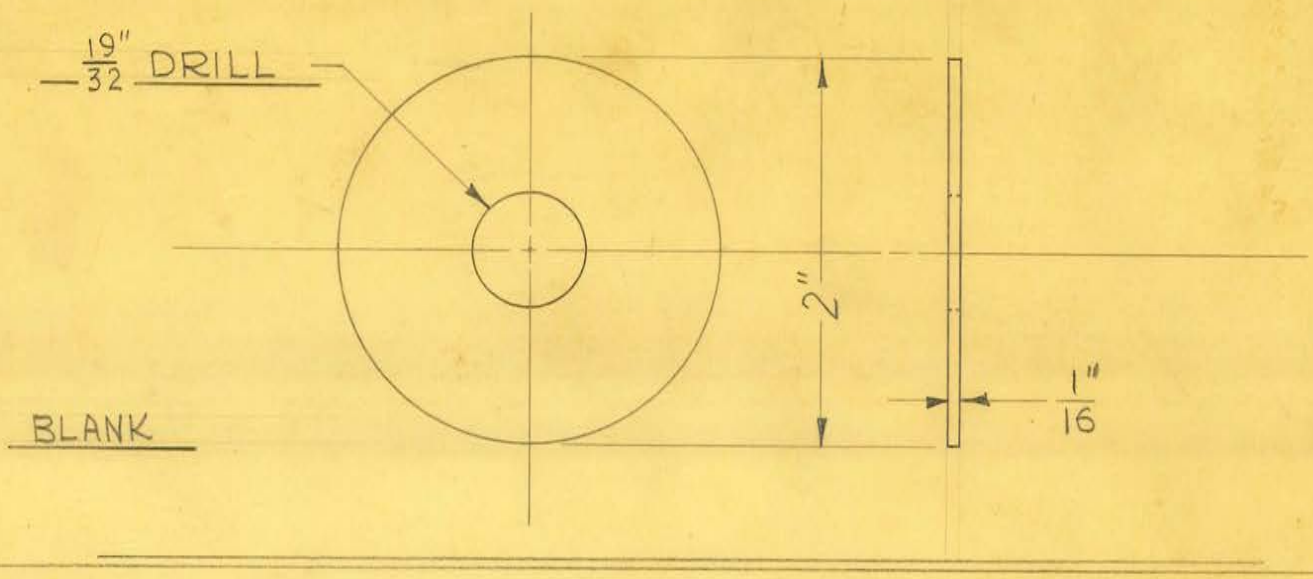


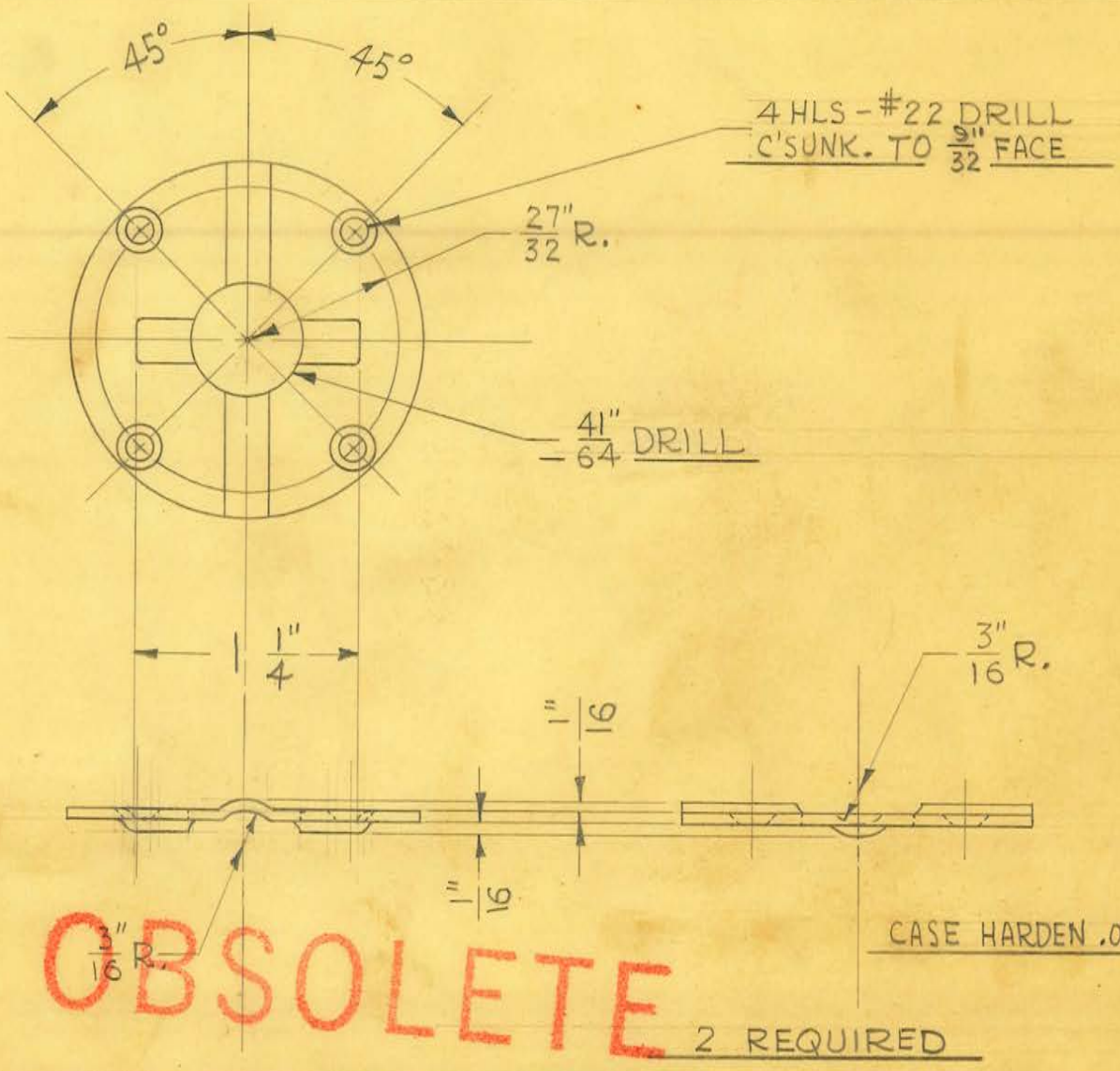


CASE HARDEN .005" DEEP

OBSOLETE

2 REQUIRED

| | | | |
|---|---|---|---|
| SIZE | 1/16" SHEET | ISSUE 4-23-41 | J.V.W. |
| KIND | C.R. STEEL | CHANGED | |
| SHAPE | | " | |
| FINISH | | " | |
| TEMP. | | " | |
| PATT. | | " | |

**TITLE:**
U.S. ARMY DENTAL X-RAY UNIT
WHEEL LOCK - LEVER LOCK DISC

H. G. FISCHER & CO.
2335 WABANSIA AVE.
CHICAGO, ILL.

CAT. NO.

PART NO. 13754

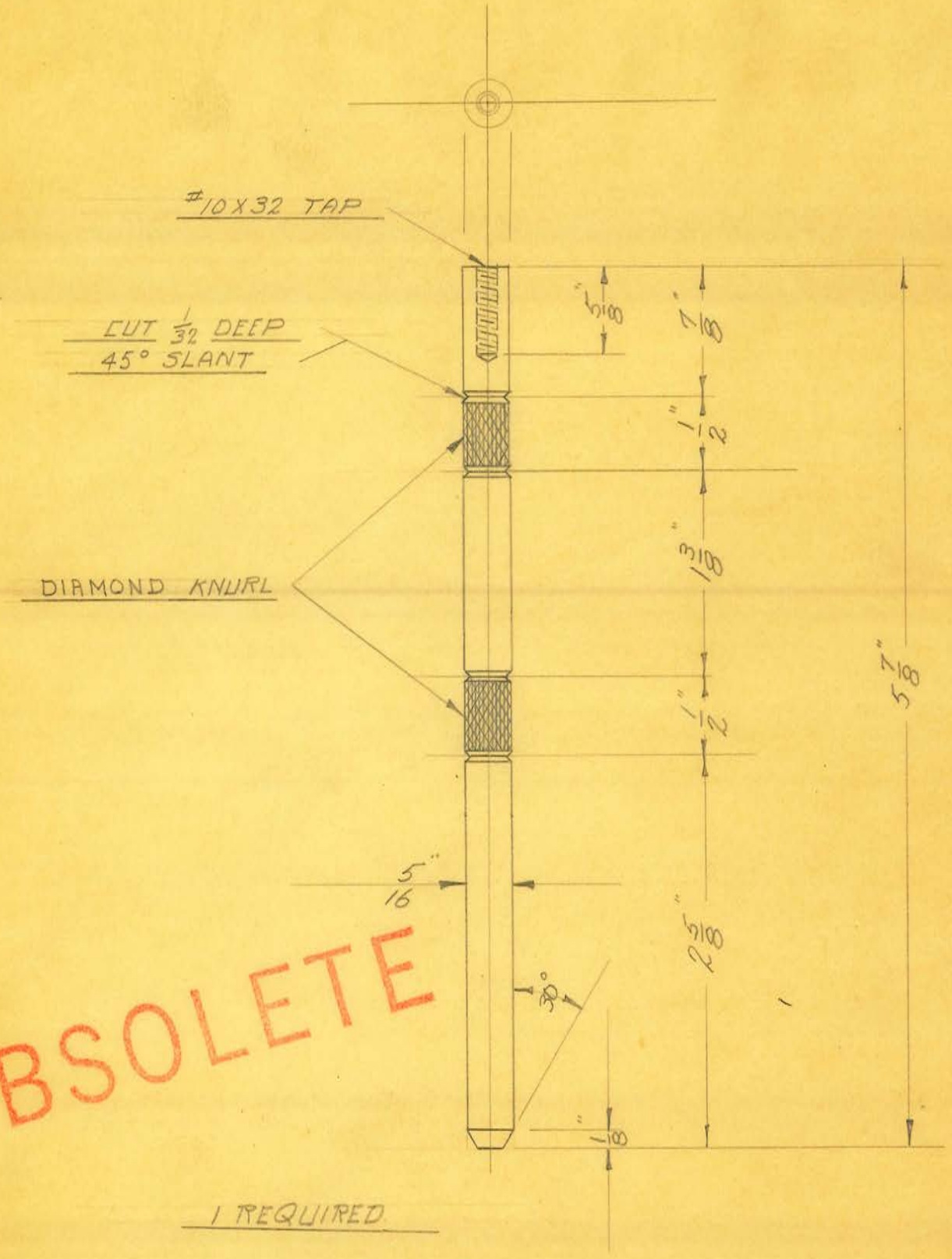


OBSOLETE

1 REQUIRED

| | | | | |
|---|---|---|---|---|
| SIZE | 5/16 ROD. | ISSUE 9-18-53 | N.P | **TITLE:** UNIVERSAL 60-88 TRANS. H.T. POST INSERT ROD. |
| KIND | BRASS | CHANGED | | |
| SHAPE | | " " | | |
| FINISH | | " " | | |
| TEMP. | | " " | | |
| PATT. | | " " | | |

H. G. FISCHER & CO.
2335 WABANSIA AVE.
CHICAGO, ILL.

CAT. NO.

PART NO. 8357

## ASSEMBLY

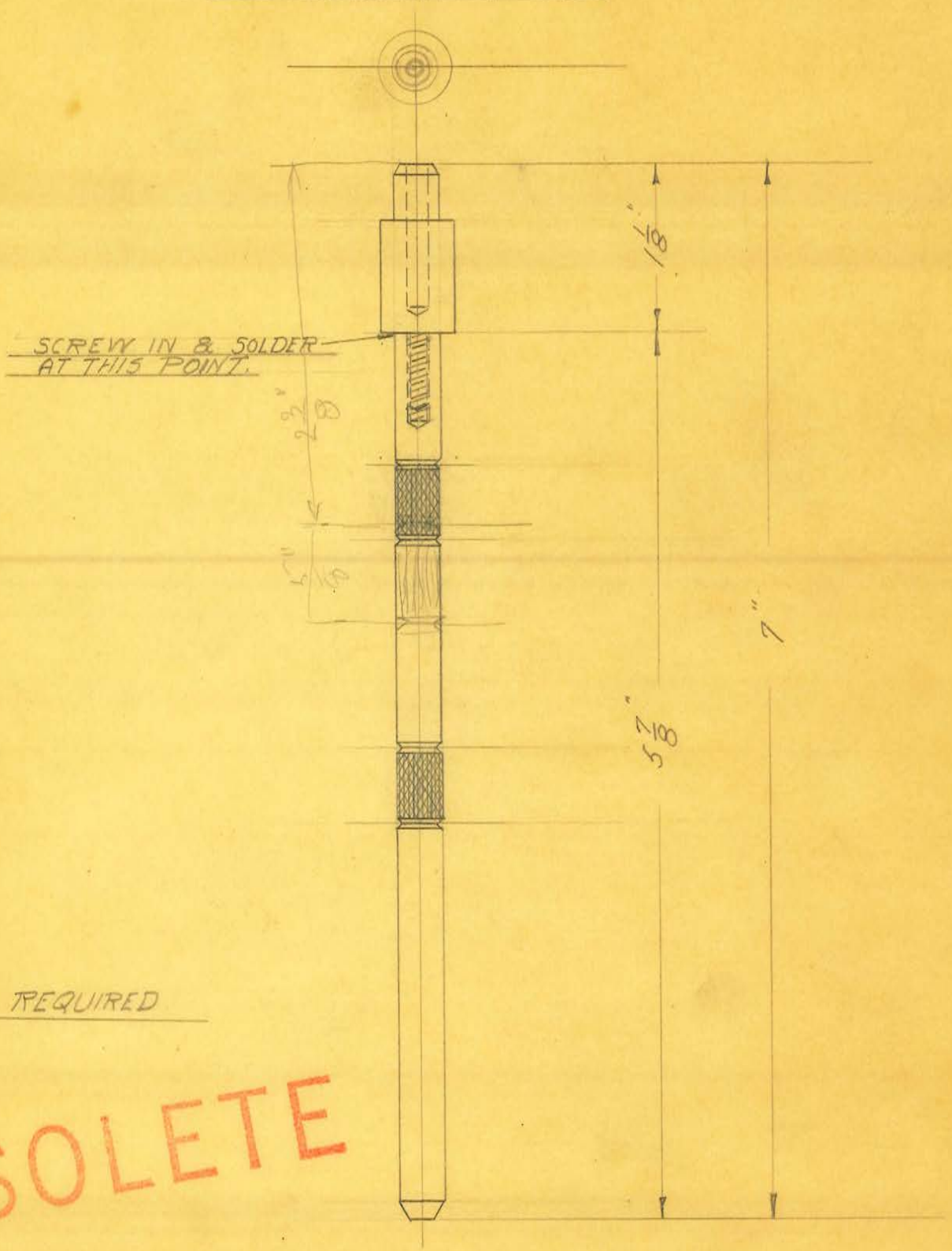


1 REQUIRED

OBSOLETE

| | | | |
|---|---|---|---|
| SIZE | | ISSUE 9-18-33 | N.P. |
| KIND | BRASS ROD | CHANGED | |
| SHAPE | | " " | |
| FINISH | | " " | |
| TEMP. | | " " | |
| PATT. | | " " | |

**TITLE:** UNIVERSAL 60-88 TRANS. H.T. POST INSERT WITH BALL CONNECTOR.

H. G. FISCHER & CO.
2335 WABANSIA AVE.
CHICAGO, ILL.

CAT. NO.

PART NO. 8357 G

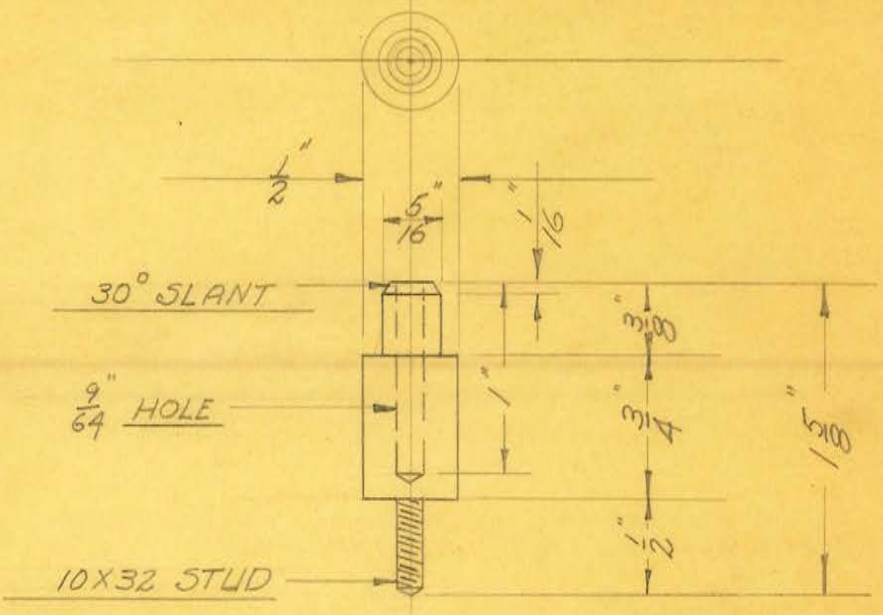


1 REQUIRED

OBSOLETE

| | | | | |
|---|---|---|---|---|
| SIZE | ½" ROD. | ISSUE 9-18-33 | N.P. | TITLE: UNIVERSAL '60-'88 TRAINS H.T. POST INSERT BALL CONN. |
| KIND | BRASS | CHANGED | | |
| SHAPE | | " " | | |
| FINISH | | " " | | |
| TEMP. | | " " | | H. G. FISCHER & CO. 2335 WABANSIA AVE. CHICAGO, ILL. / CAT. NO. / PART NO. 8358 |
| PATT. | | " " | | |

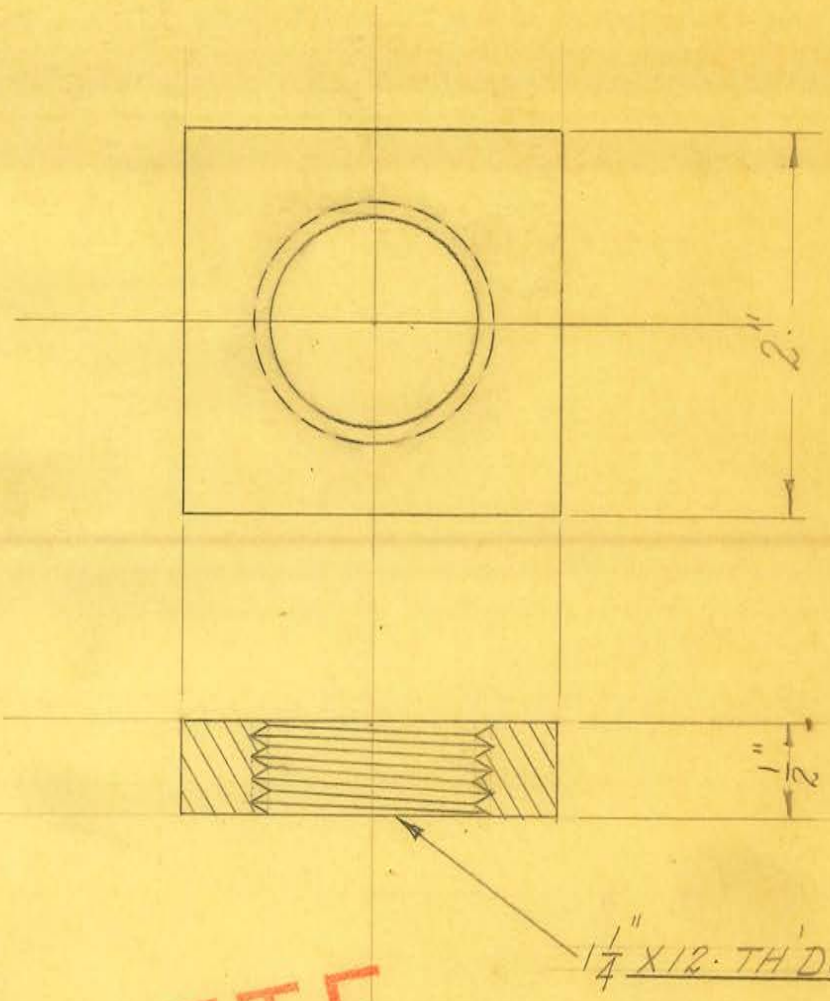


OBSOLETE

2 REQUIRED

| | | | | | |
|---|---|---|---|---|---|
| SIZE | 1/2 SHEET | ISSUE 10-25-33 | N.P. | TITLE: UNIVERSAL 60-88" TRANSFORMER HIGH TENSION POST NUT | |
| KIND | BAKELITE | CHANGED | | | |
| SHAPE | | " | | | |
| FINISH | | " | | | |
| TEMP. | | " | | | |
| PATT. | | " | | | |
| H. G. FISCHER & CO. 2335 WABANSIA AVE. CHICAGO, ILL. | | CAT. NO. | | PART NO. 8360 | |

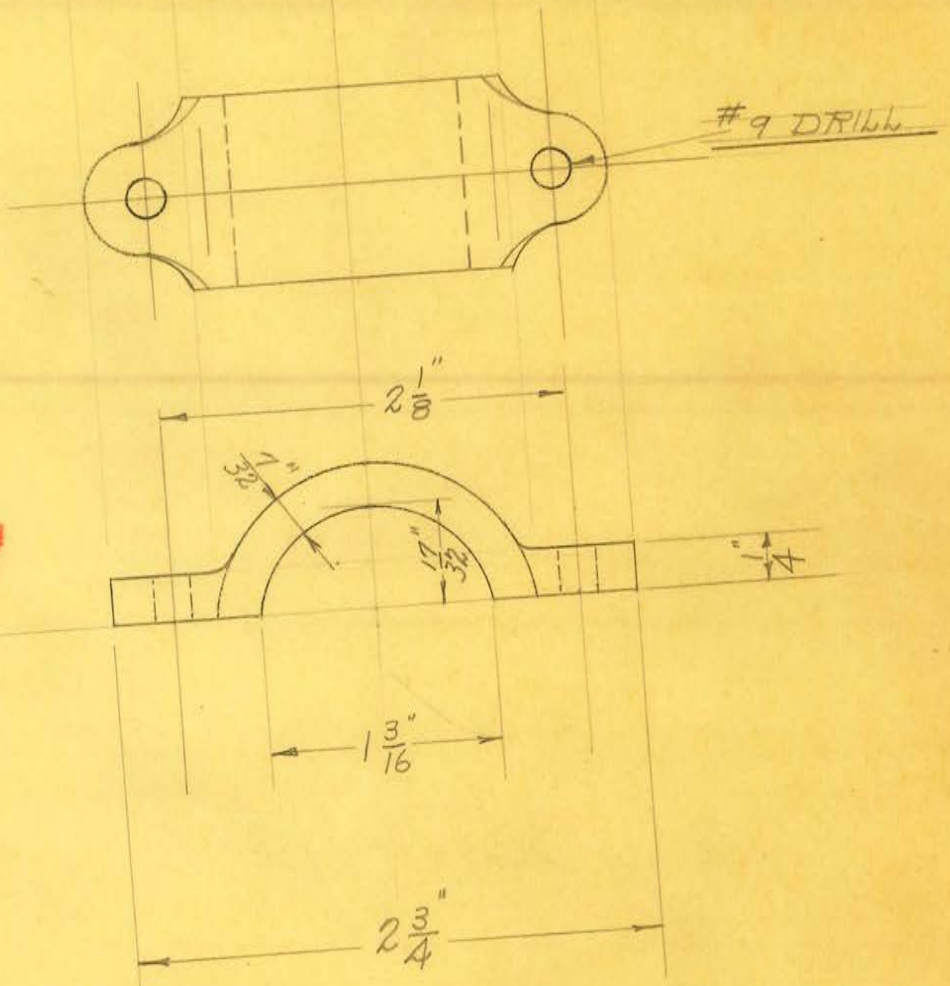


2 REQUIRED

OBSOLETE

| | | | | |
|---|---|---|---|---|
| SIZE | | ISSUE 10-25-33 | N.R. | TITLE: UNIVERSAL "60-88" TRANFORMER CABLE SUPPORT CLAMP |
| KIND | ALUM. CAST. | CHANGED | | |
| SHAPE | | " | | |
| FINISH | BLACK LACQ. | " | | |
| TEMP. | | " | | |
| PATT. | #4558-653 | " | | |

H. G. FISCHER & CO.
2335 WABANSIA AVE.
CHICAGO, ILL.

CAT. NO.

PART NO. 8362F

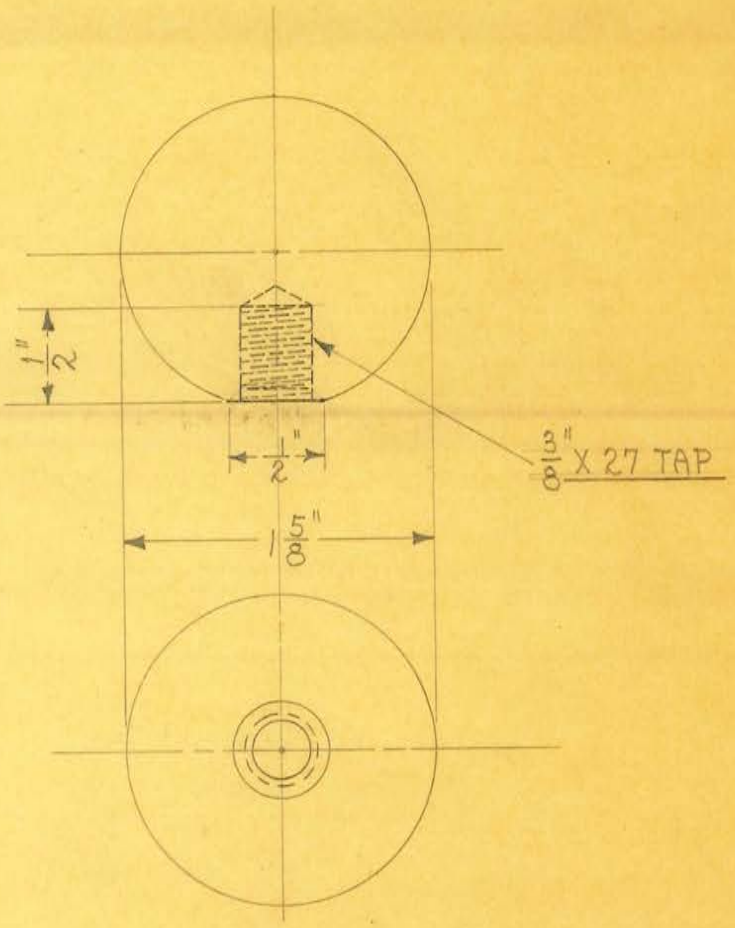


2 REQUIRED

OBSOLETE

| | | | | |
|---|---|---|---|---|
| SIZE | 1 3/4" | ISSUE 5-18-33 | A.E. | TITLE: UNIVERSAL "CO-88" TRANS. SPHERE GAP BALL |
| KIND | ALUM. ROD | CHANGED | | |
| SHAPE | | " " | | |
| FINISH | | " " | | |
| TEMP. | | " " | | H. G. FISCHER & CO. 2335 WABANSIA AVE. CHICAGO, ILL. — CAT. NO. — PART NO. 8363 |
| PATT. | | " " | | |

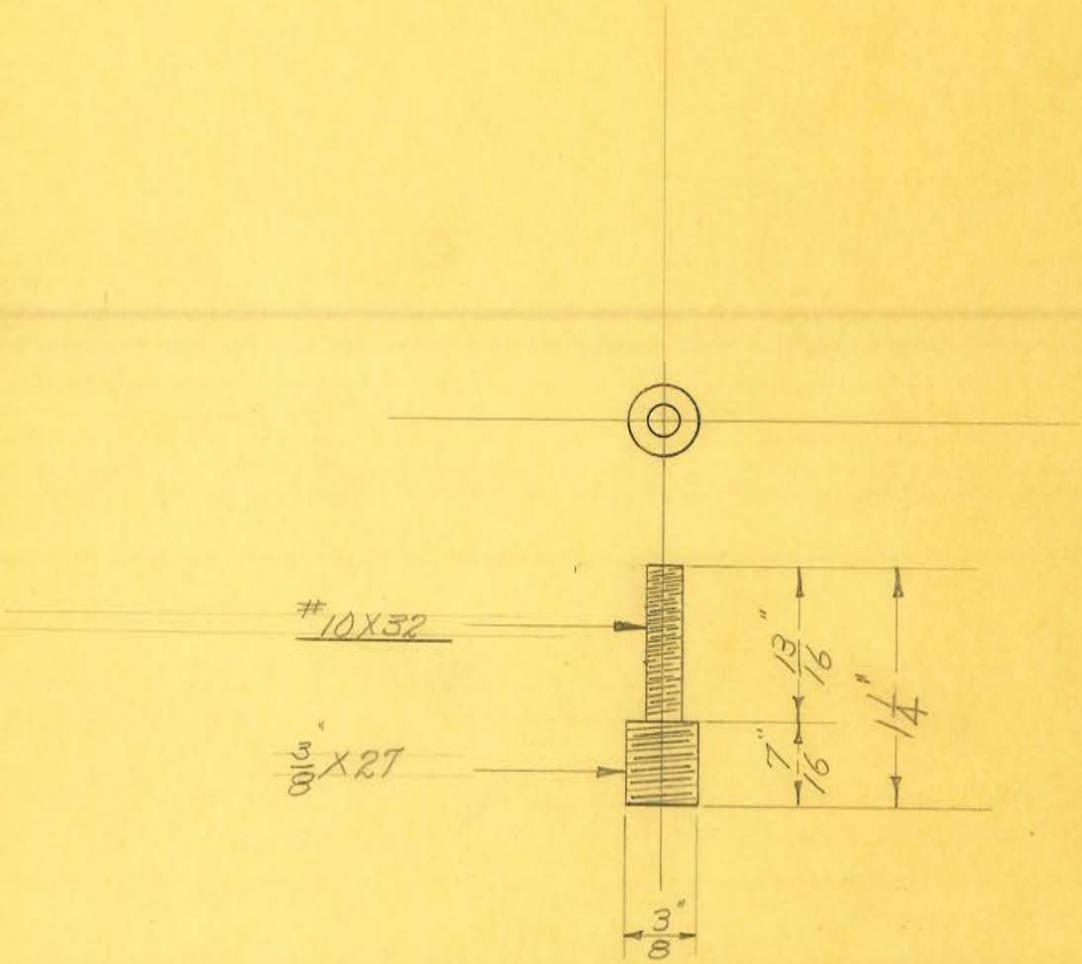


2 REQUIRED

OBSOLETE

| | | | |
|---|---|---|---|
| SIZE | 3/8 ROD | ISSUE 10-25-33 | N.R. |
| KIND | BRASS | CHANGED | |
| SHAPE | | " | |
| FINISH | | " | |
| TEMP. | | " | |
| PATT. | | " | |

**TITLE:** UNIVERSAL "60-88" TRANSFORMER SPHERE GAP BALL STUD

H. G. FISCHER & CO.
2335 WABANSIA AVE.
CHICAGO, ILL.

CAT. NO.

PART NO. 8363 1/2

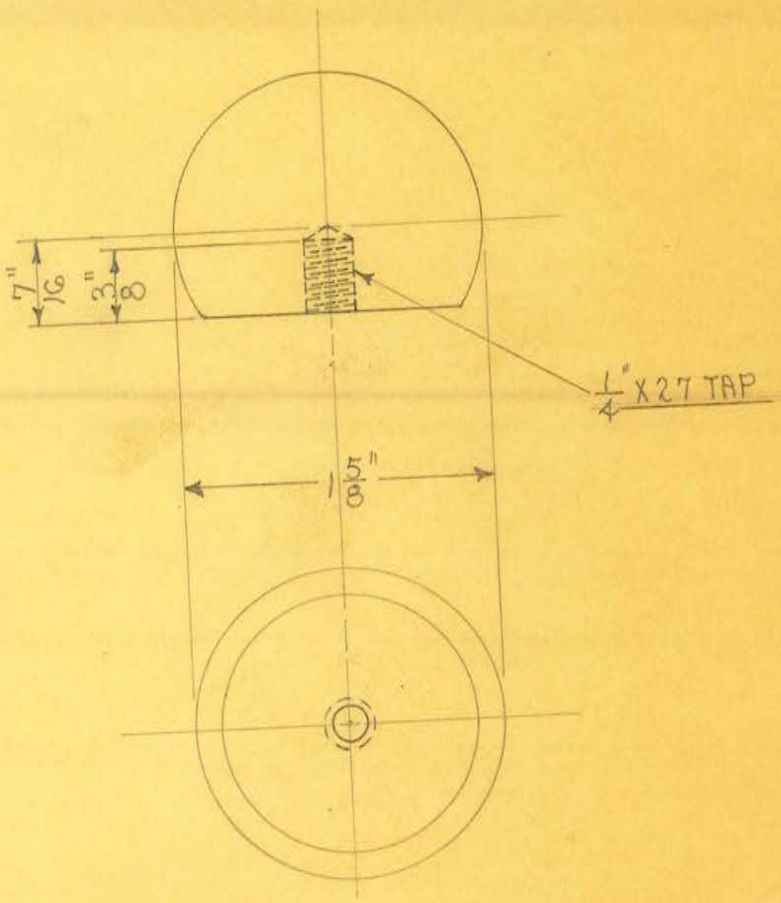


1 REQUIRED

OBSOLETE

| | | | | |
|---|---|---|---|---|
| SIZE | 1 3/4" | ISSUE 5-18-33 | A.E. | TITLE: UNIVERSAL "60-88" TRANS. ADJ. SPHERE GAP BAL |
| KIND | ALUM. ROD | CHANGED | | |
| SHAPE | | " " | | |
| FINISH | | " " | | |
| TEMP. | | " " | | |
| PATT. | | " " | | |

H. G. FISCHER & CO.
2335 WABANSIA AVE.
CHICAGO, ILL.

CAT. NO.

PART NO. 8364

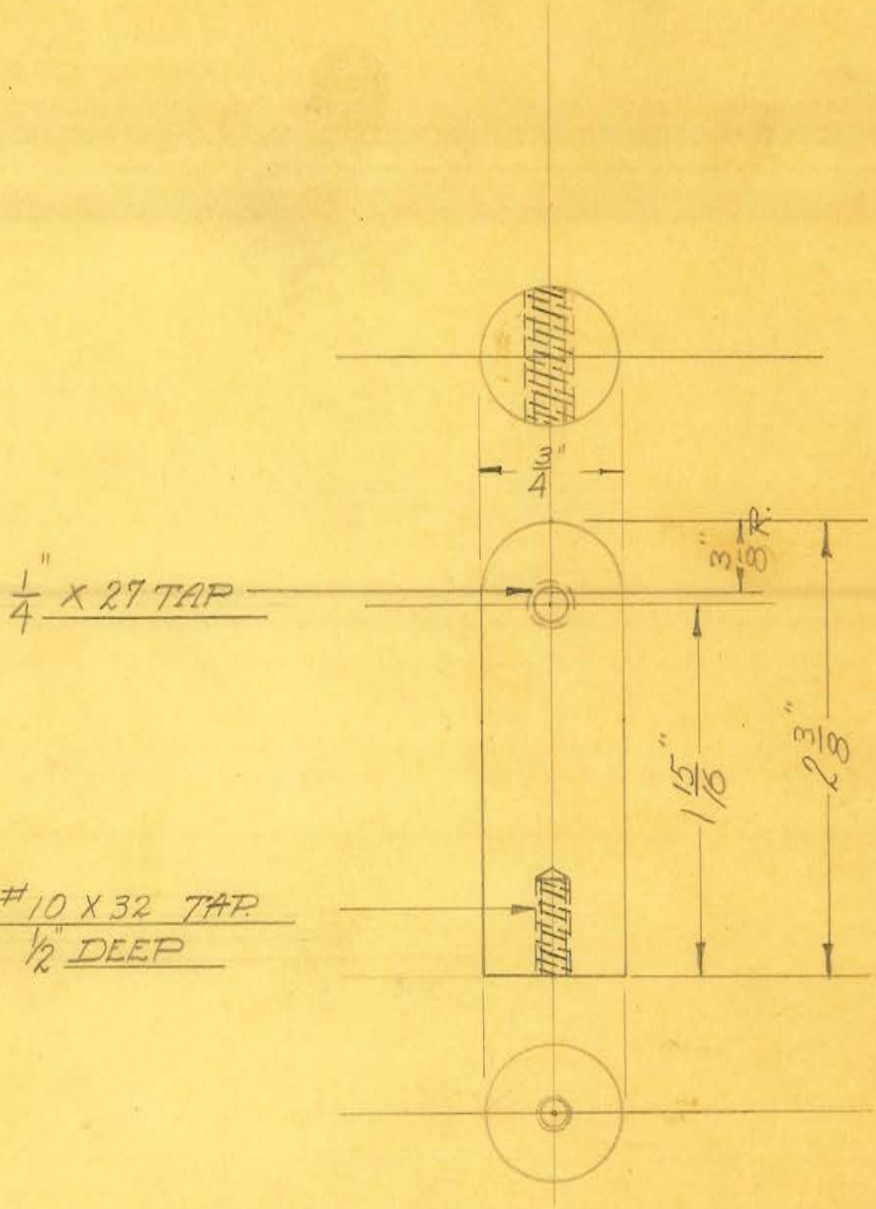


1 REQUIRED

OBSOLETE

| | | | | |
|---|---|---|---|---|
| SIZE | 3/4" ROD. | ISSUE 9-11-33 | N.P. | TITLE: UNIVERSAL "60-88" TRANS. ADJ. SPHERE GAP BALL SUPPORT POST. |
| KIND | C.R. STEEL | CHANGED | | |
| SHAPE | | " " | | |
| FINISH | | " " | | |
| TEMP. | | " " | | H. G. FISCHER & CO. 2335 WABANSIA AVE. CHICAGO, ILL. — CAT. NO. — PART NO. 8365 |
| PATT. | | " " | | |

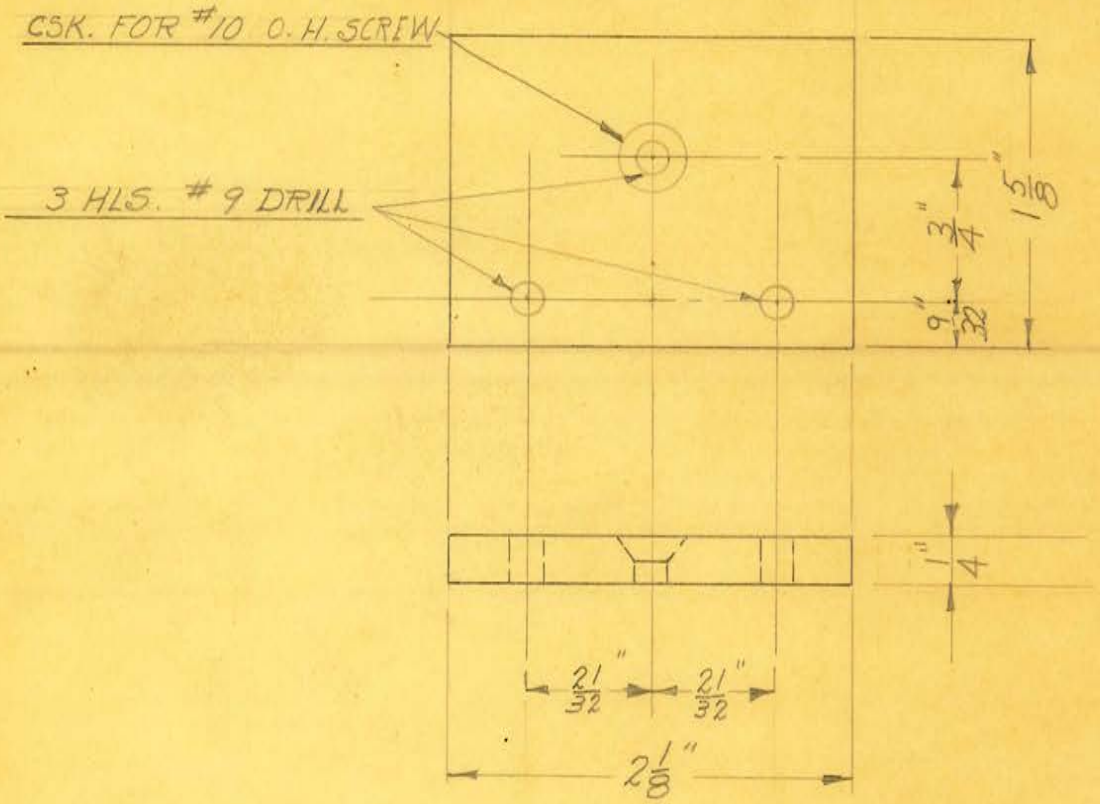


1 REQUIRED

OBSOLETE

| | | | | | |
|---|---|---|---|---|---|
| SIZE | 1/4" SHEET | ISSUE 9-11-33 | N.P. | TITLE: UNIVERSAL "60-88" TRANS. SPHERE GAP BASE | |
| KIND | BAKELITE | CHANGED | | | |
| SHAPE | | " " | | | |
| FINISH | | " " | | | |
| TEMP. | | " " | | H. G. FISCHER & CO. 2335 WABANSIA AVE. CHICAGO, ILL. | CAT. NO. |
| PATT. | | " " | | | PART NO. 8366 |

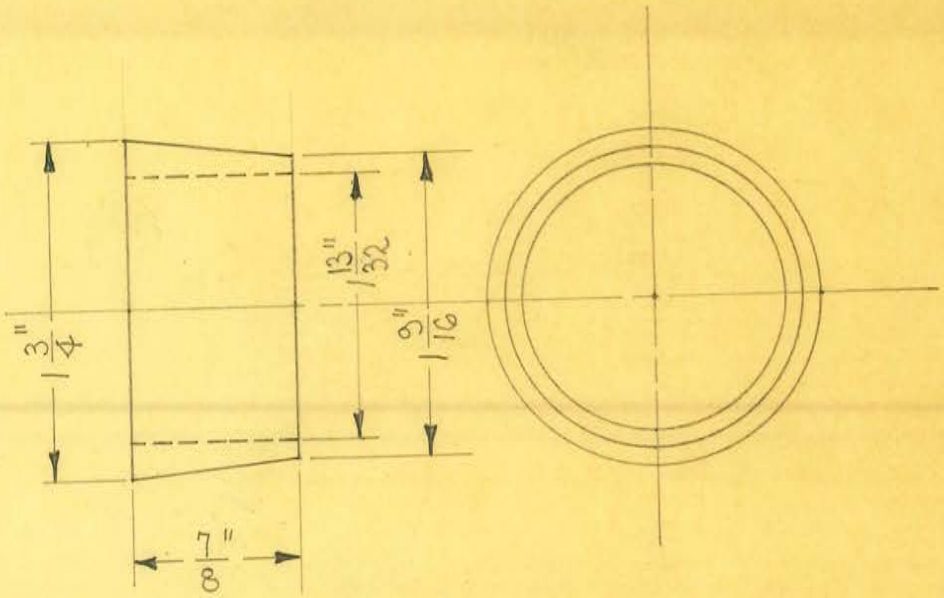


1 REQUIRED

OBSOLETE

| | | | |
|---|---|---|---|
| SIZE | | ISSUE 3-6-36 | A.E. |
| KIND | CORK | CHANGED | |
| SHAPE | | " | |
| FINISH | | " | |
| TEMP. | | " | |
| PATT. | | " | |

**TITLE:** UNIVERSAL "60-88" LEAD GLASS SHIELD - LARGE HOLE CORK

H. G. FISCHER & CO.
2335 WABANSIA AVE.
CHICAGO, ILL.

CAT. NO.

PART NO. 8367

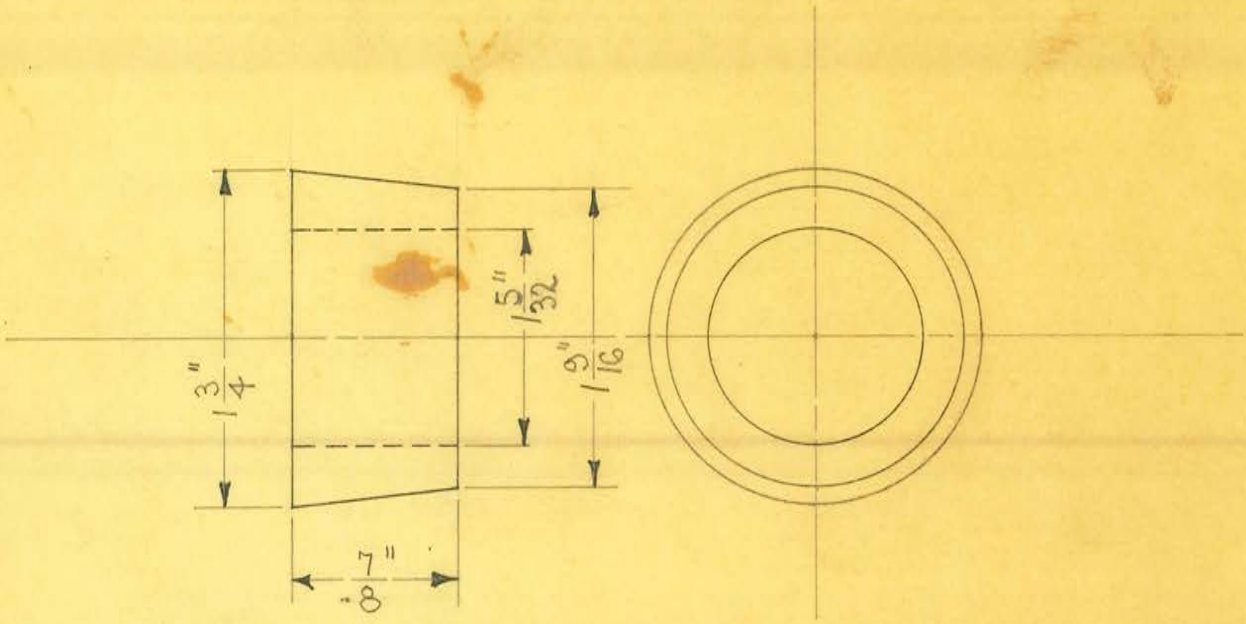


1 REQUIRED

OBSOLETE

| | | | |
|---|---|---|---|
| SIZE | | ISSUE 3-5-36 | A.E. |
| KIND | CORK | CHANGED | |
| SHAPE | | " | |
| FINISH | | " | |
| TEMP. | | " | |
| PATT. | | " | |

**TITLE:** UNIVERSAL "60-88" LEAD GLASS SHIELD-SMALL HOLE CORK

H. G. FISCHER & CO.
2338 WABANSIA AVE.
CHICAGO, ILL.

CAT. NO.

PART NO. 8368

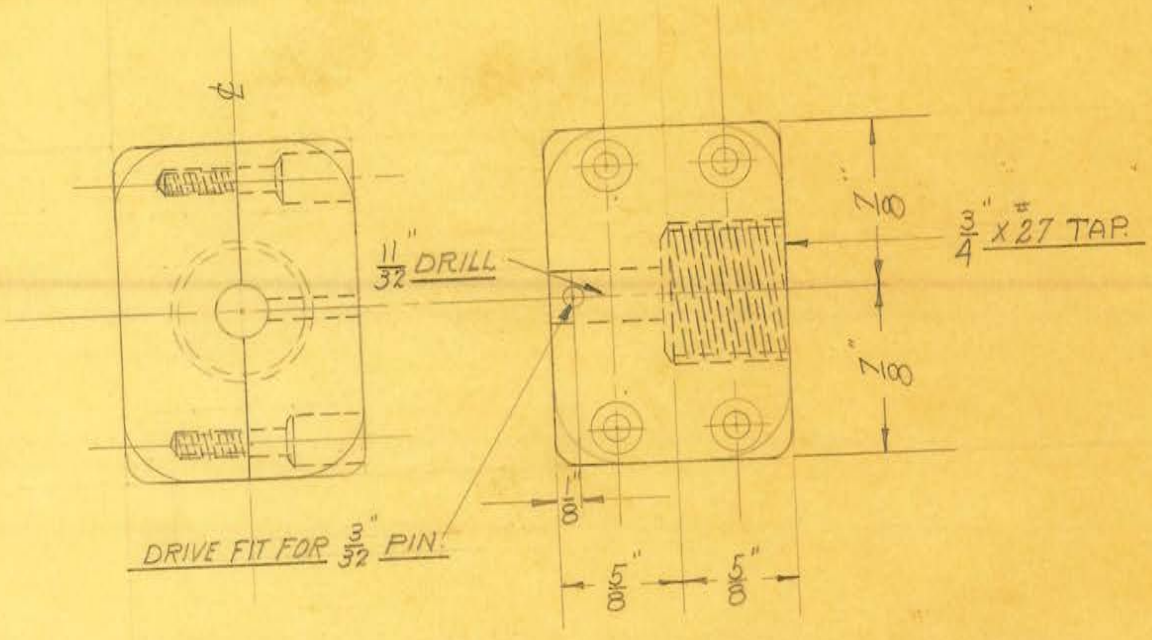


OBSOLETE

| | | | | |
|---|---|---|---|---|
| SIZE | | ISSUE 9-5-33 | N.R. | TITLE: UNIVERSAL "60-88" TUBE STAND H.T. CABLE TERMINAL PLUG "SINGLE" |
| KIND | | CHANGED | | |
| SHAPE | | " " | | |
| FINISH | | " " | | |
| TEMP. | | " " | | H. G. FISCHER & CO. 2335 WABANSIA AVE. CHICAGO, ILL. / CAT. NO. / PART NO. 8370 G |
| PATT. | | " " | | |

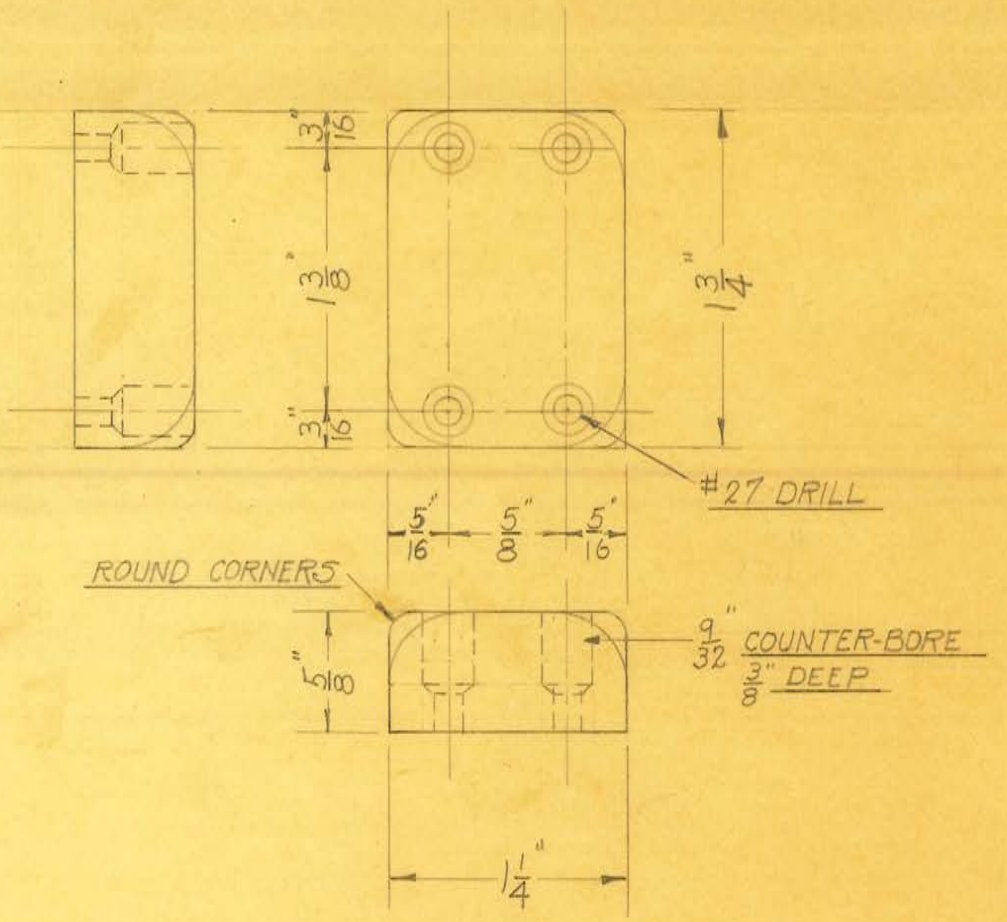


OBSOLETE

OBSOLETE

| | | | |
|---|---|---|---|
| SIZE | 5/8 | ISSUE 9-5-33 | N.P. |
| KIND | SHEET BAK. | CHANGED | |
| SHAPE | | " " | |
| FINISH | | " " | |
| TEMP. | | " " | |
| PATT. | | " " | |

**TITLE:** UNIVERSAL "60-88" TUBE STAND H.T. CABLE TERMINAL PLUG "UPPER BLOCK"

H. G. FISCHER & CO.
2335 WABANSIA AVE.
CHICAGO, ILL.

CAT. NO.

PART NO. 8371

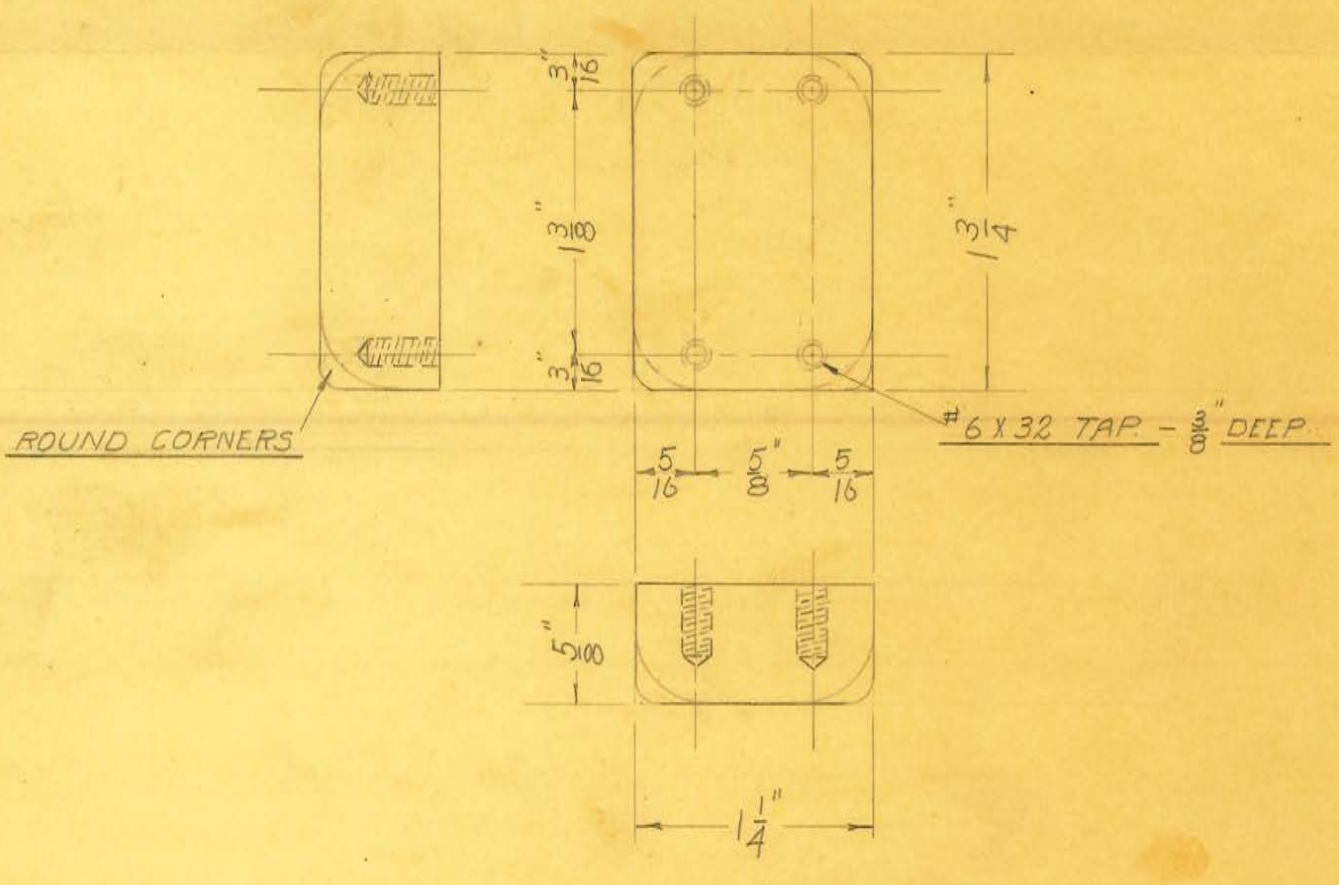


OBSOLETE

OBSOLETE

| | | | | |
|---|---|---|---|---|
| SIZE | 5/8" | ISSUE 9-5-33 | N.P. | **TITLE:** UNIVERSAL "60-88" TUBE STAND H.T. CABLE TERMINAL PLUG "LOWER BLOCK" |
| KIND | SHEET BAK. | CHANGED | | |
| SHAPE | | " " | | |
| FINISH | | " " | | |
| TEMP. | | " " | | H. G. FISCHER & CO. 2335 WABANSIA AVE. CHICAGO, ILL. — CAT. NO. — PART NO. 8372 |
| PATT. | | " " | | |

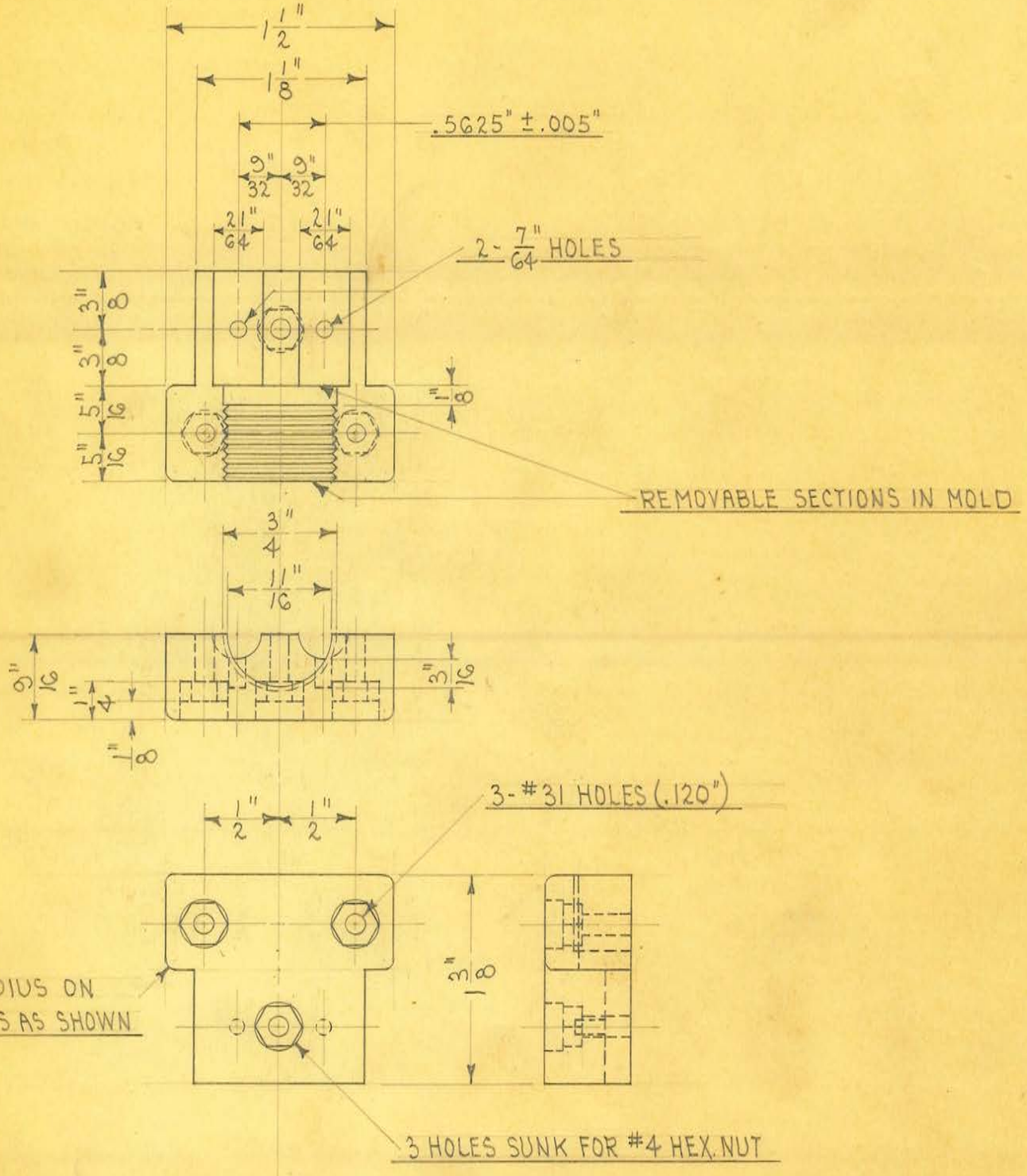


OBSOLETE

| | | | |
|---|---|---|---|
| SIZE | | ISSUE 6-11-35 | A.E. |
| KIND | MOLDED BAKELITE | CHANGED | |
| SHAPE | | " | |
| FINISH | | " | |
| TEMP. | | " | |
| PATT. | | " | |

**TITLE:** UNIVERSAL "60-88" TUBE STAND H.T. CABLE TERM. PLUG - HALF

H. G. FISCHER & CO.
2335 WABANSIA AVE.
CHICAGO, ILL.

CAT. NO.

PART NO. 8372

HAVE CONTACT ARM AGAINST STOP AS SHOWN & DRILL PIN HOLE $\frac{1}{8}$ DRL. AT RIGHT ANGLE TO ARM.

2-M4516 R.H.I.

13311

1550B

8333 $\frac{1}{4}$ B

M878 R.H.B.

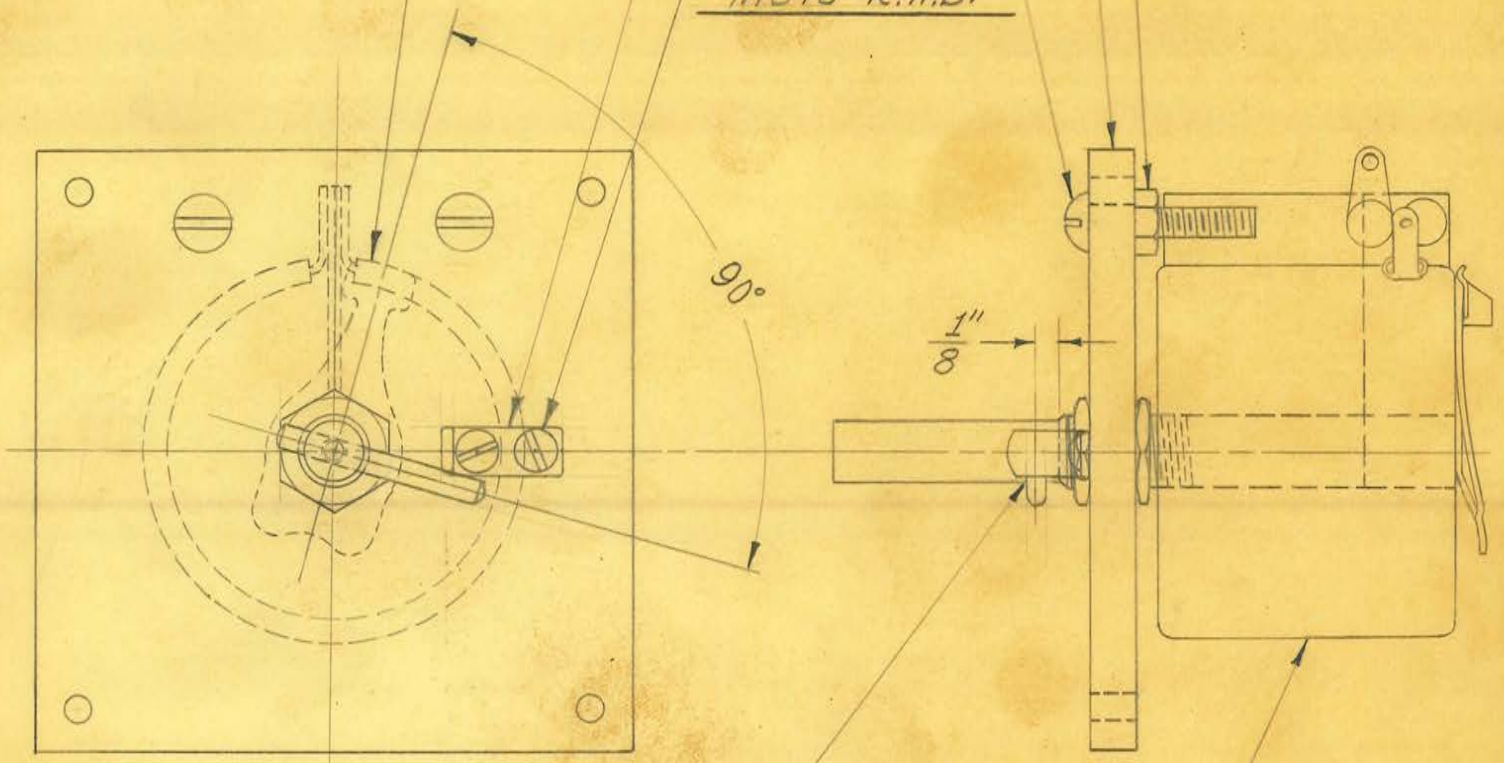


13312

8373GA

OBSOLETE

1 REQUIRED

| | | | |
|---|---|---|---|
| SIZE | | ISSUE 3-13-39 | J.W. |
| KIND | | CHANGED 7-10-40 | J.W. |
| SHAPE | | " | |
| FINISH | | " | |
| TEMP. | | " | |
| PATT. | | " | |

**TITLE:** FISCHER MOD. "100-100" REMOTE CONTROL RHEOSTAT (MOUNTED)

H. G. FISCHER & CO.
2335 WABANSIA AVE.
CHICAGO, ILL.

CAT. NO.

PART NO. 8373 $\frac{1}{2}$ GA

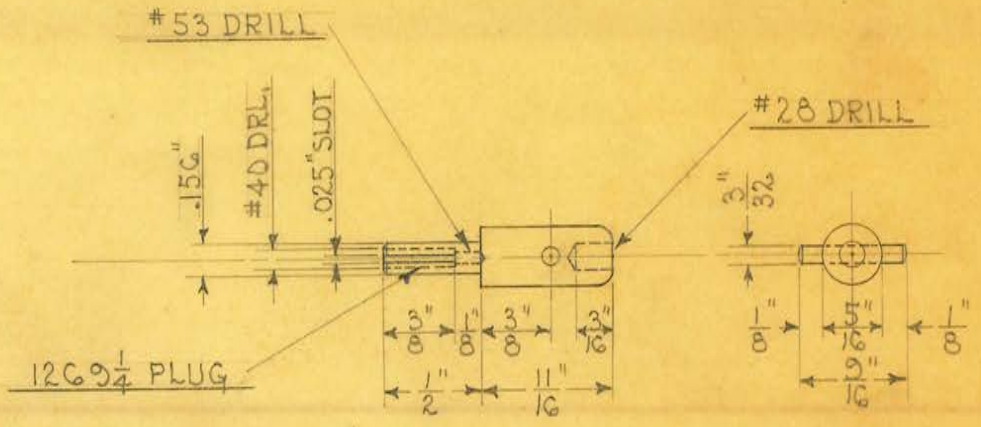


OBSOLETE

| | | | | |
|---|---|---|---|---|
| SIZE | | ISSUE 10-17-33 | 2/8 | TITLE: UNIVERSAL "60-88" TUBE STAND H.T. CABLE TERM. PLUG TIP ASSEM. |
| KIND | BRASS ROD | CHANGED | | |
| SHAPE | | " " | | |
| FINISH | | " " | | |
| TEMP. | | " " | | H. G. FISCHER & CO. 2335 WABANSIA AVE. CHICAGO, ILL. — CAT. NO. — PART NO. 8374G |
| PATT. | | " " | | |

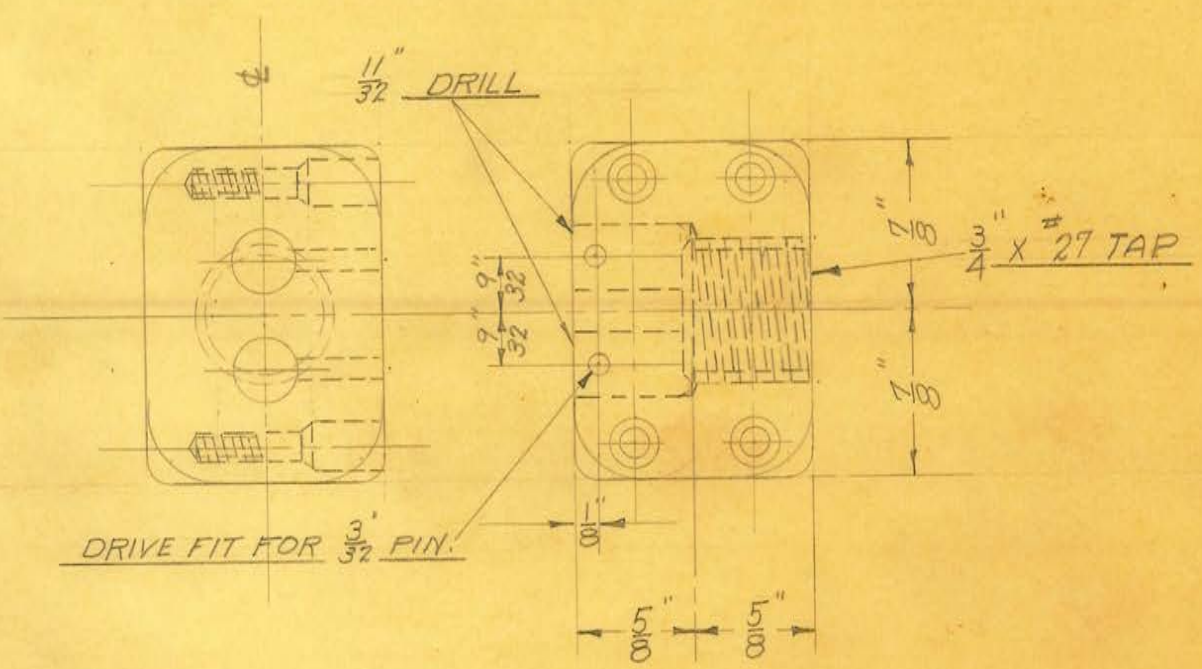


OBSOLETE

| | | | | |
|---|---|---|---|---|
| SIZE | | ISSUE 9-5-33 | N.P. | TITLE: UNIVERSAL "60-88" TUBE STAND H.T. CABLE TERMINAL PLUG - "DOUBLE" |
| KIND | | CHANGED | | |
| SHAPE | | " " | | |
| FINISH | | " " | | |
| TEMP. | | " " | | H. G. FISCHER & CO. 2335 WABANSIA AVE. CHICAGO, ILL. / CAT. NO. / PART NO. 8377G |
| PATT. | | " " | | |

OBSOLETE

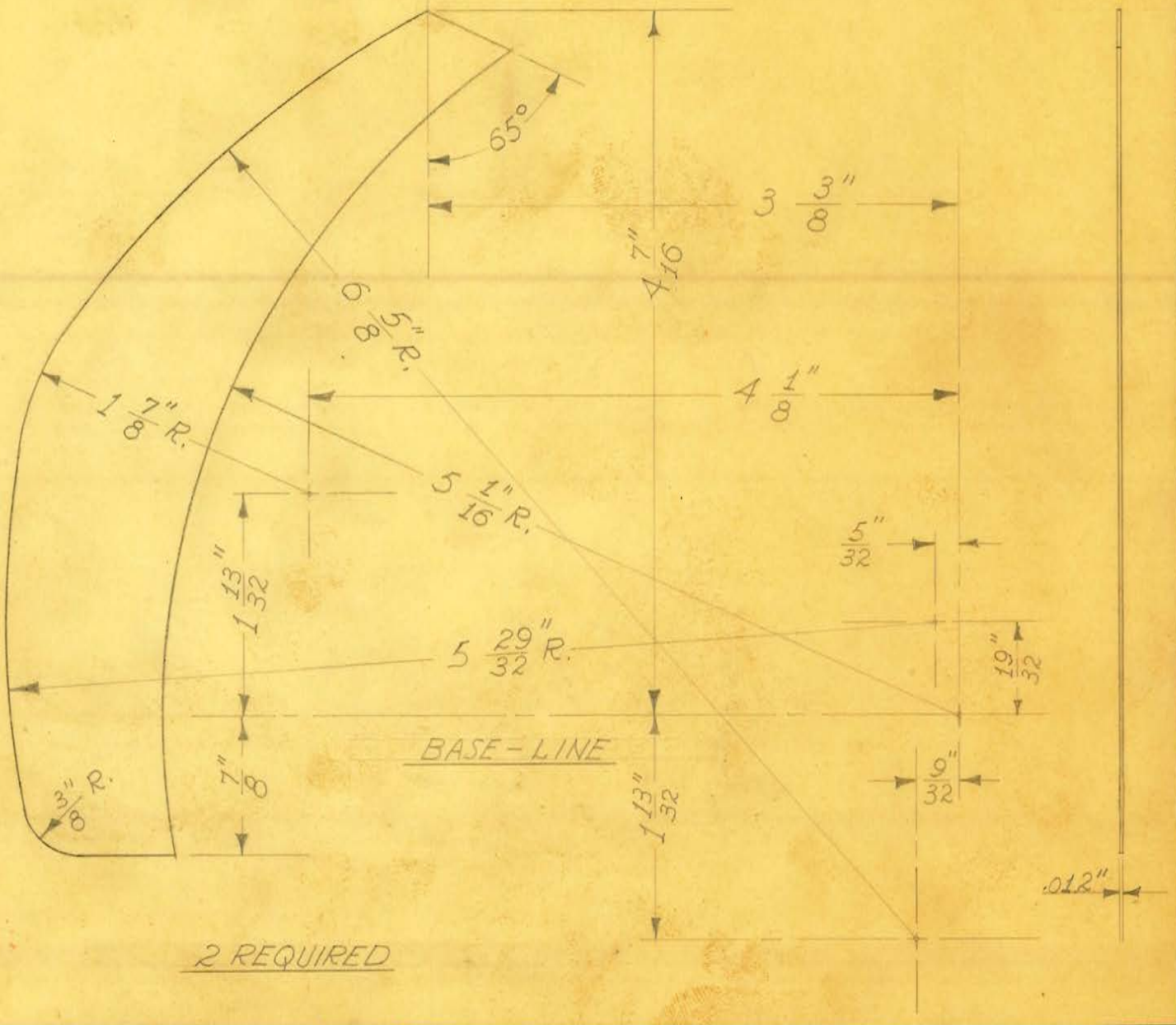


2 REQUIRED

| | | | |
|---|---|---|---|
| SIZE | .012" | ISSUE 8-14-36 | J.W. |
| KIND | LEAD | CHANGED | |
| SHAPE | SHEET | " | |
| FINISH | | " | |
| TEMP. | | " | |
| PATT. | | " | |

**TITLE:** UNIVERSAL "60-88" H.T. CABLE STRESS CONE - RELIEF STRIP - TOP

H. G. FISCHER & CO.
2335 WABANSIA AVE.
CHICAGO, ILL.

CAT. NO.

PART NO. 8378 1/8

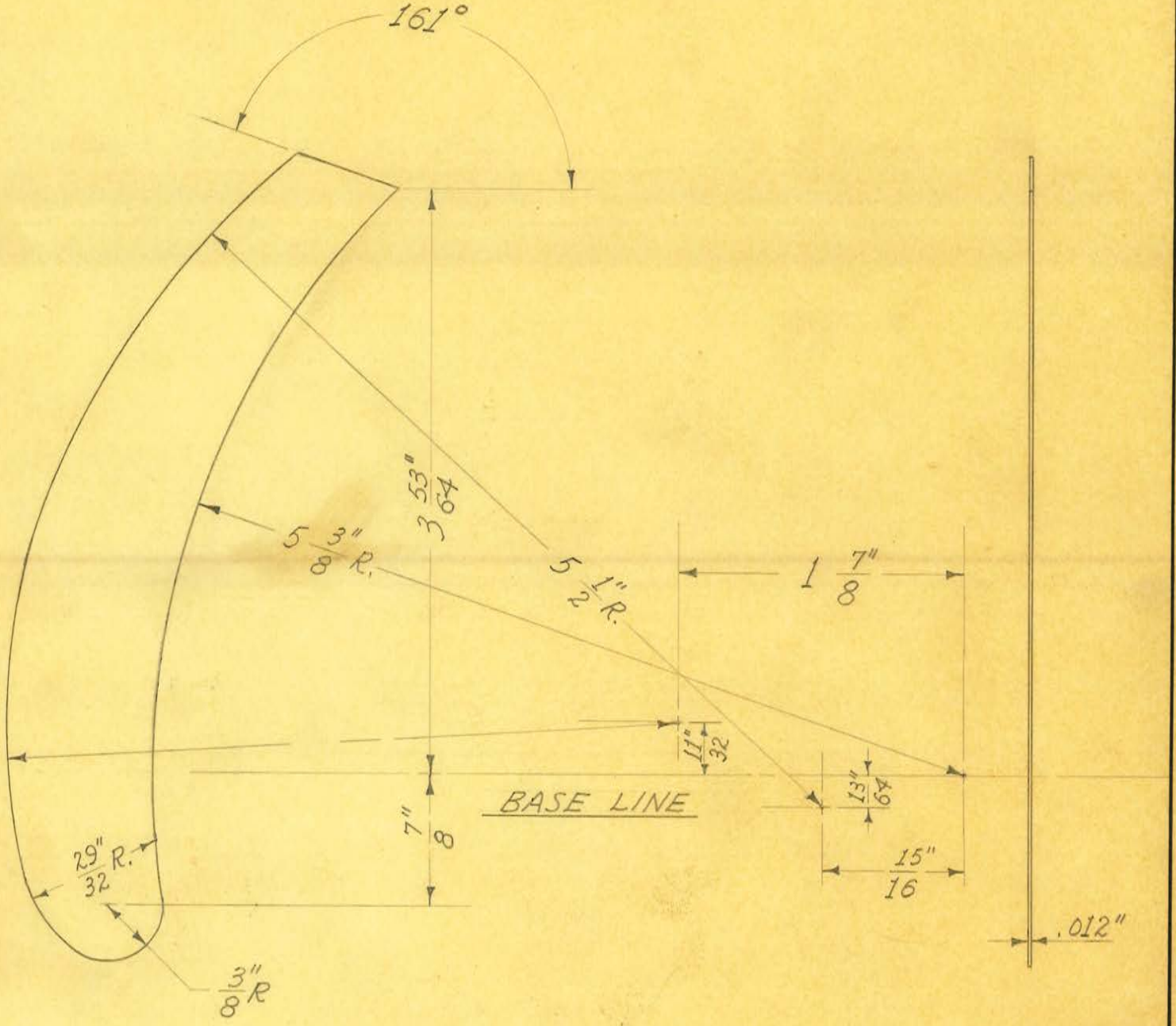


2 REQUIRED

OBSOLETE

| | | | |
|---|---|---|---|
| SIZE | .012" SHEET | ISSUE 6-17-37 | J.W. |
| KIND | LEAD | CHANGED | |
| SHAPE | | " | |
| FINISH | | " | |
| TEMP. | | " | |
| PATT. | | " | |

**TITLE:** UNIVERSAL "60-88" H.T. CABLE STRESS CONE RELIEF STRIP - BOTTOM

H. G. FISCHER & CO.
2335 WABANSIA AVE.
CHICAGO, ILL.

CAT. NO.

PART NO. 8379 1/8

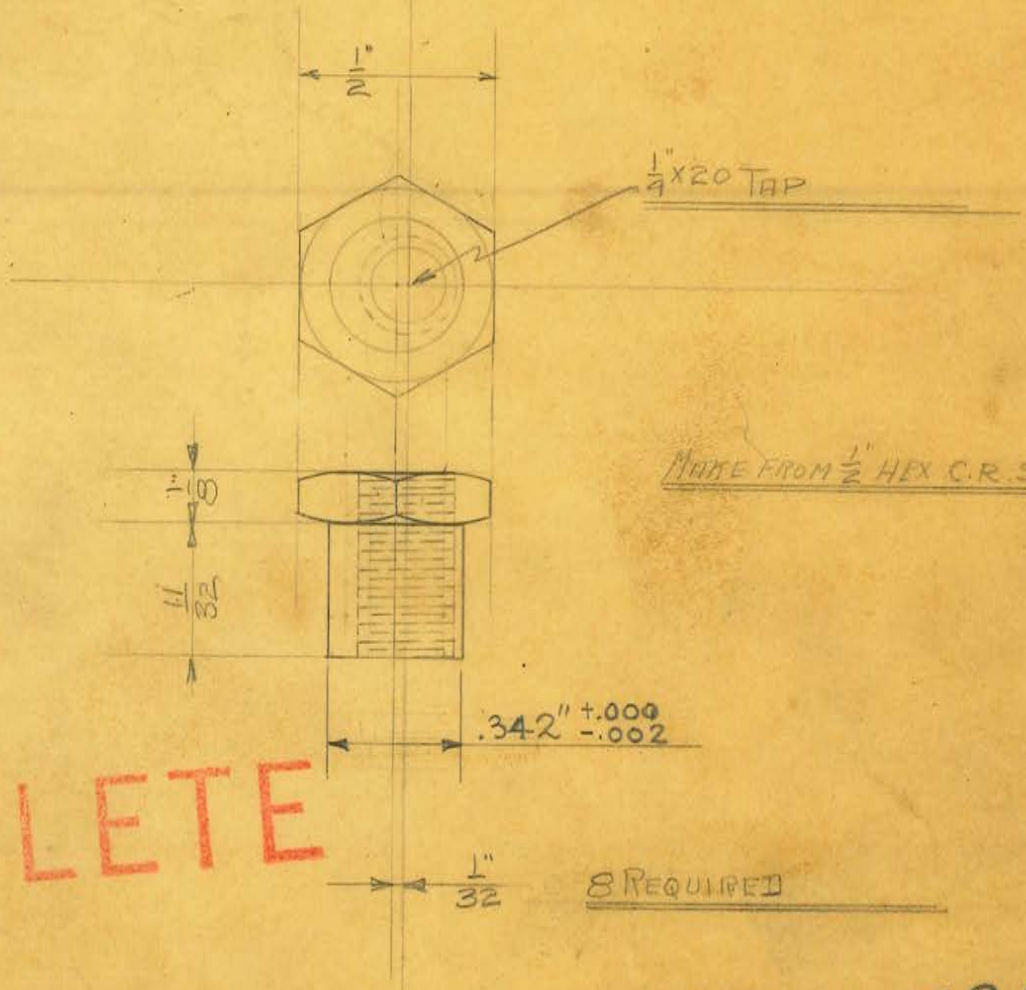


MAKE FROM 1/2" HEX C.R. STEEL

8 REQUIRED

OBSOLETE

SEE NEW TRACING

| | | | | | | |
|---|---|---|---|---|---|---|
| SIZE | 1/2" HEX. | ISSUE | | TITLE: UNIVERSAL "GO-88" TUBE STAND VERTICAL & HORIZ. SLIDE ECCENTRIC BUSHING | | |
| KIND | C.R. STEEL | CHANGED | | | | |
| SHAPE | ROD. | " " | | | | |
| FINISH | CAD. #23 | " " | | | | |
| TEMP. | | " " | | H. G. FISCHER & CO. 2335 WABANSIA AVE. CHICAGO, ILL. | CAT. NO. | PART NO. 8385A |
| PATT. | | " " | | | | |

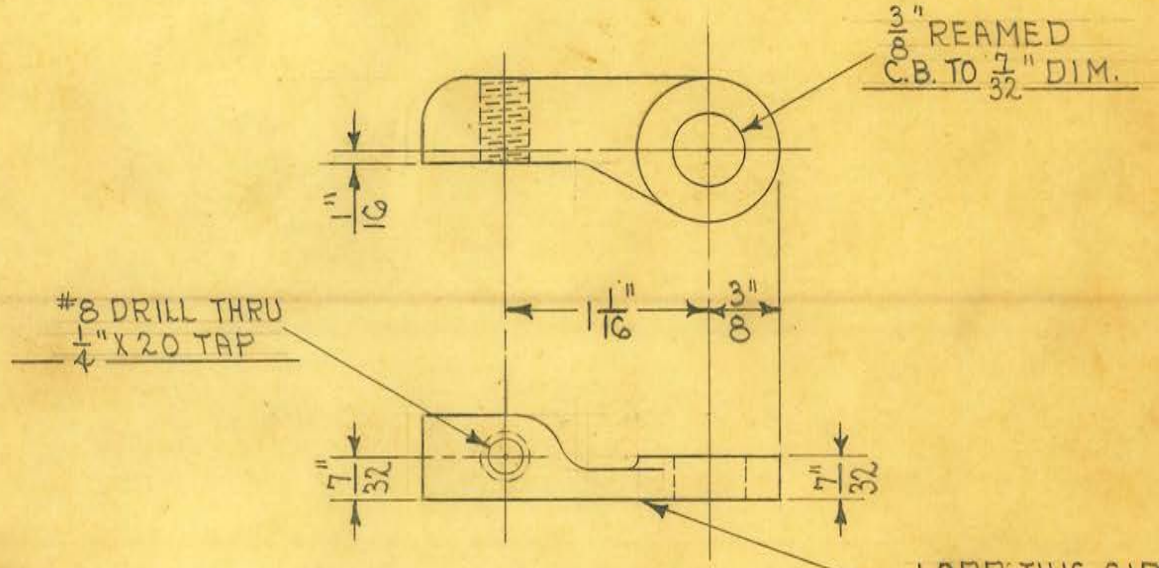


1-REQUIRED

OBSOLETE

Obsolete
2-1-49

| | | | | |
|---|---|---|---|---|
| SIZE | | ISSUE 4-17-34 | A.E. | **TITLE:** UNIVERSAL "60-88" BUCKY LOCK LEVER |
| KIND | BRASS CASTING | CHANGED | | |
| SHAPE | | " | | |
| FINISH | CAD. PLATE | " | | |
| TEMP. | | " | | H. G. FISCHER & CO. 2335 WABANSIA AVE. CHICAGO, ILL. — CAT. NO. — PART NO. 8387AF |
| PATT. | 9173-730 | " | | |

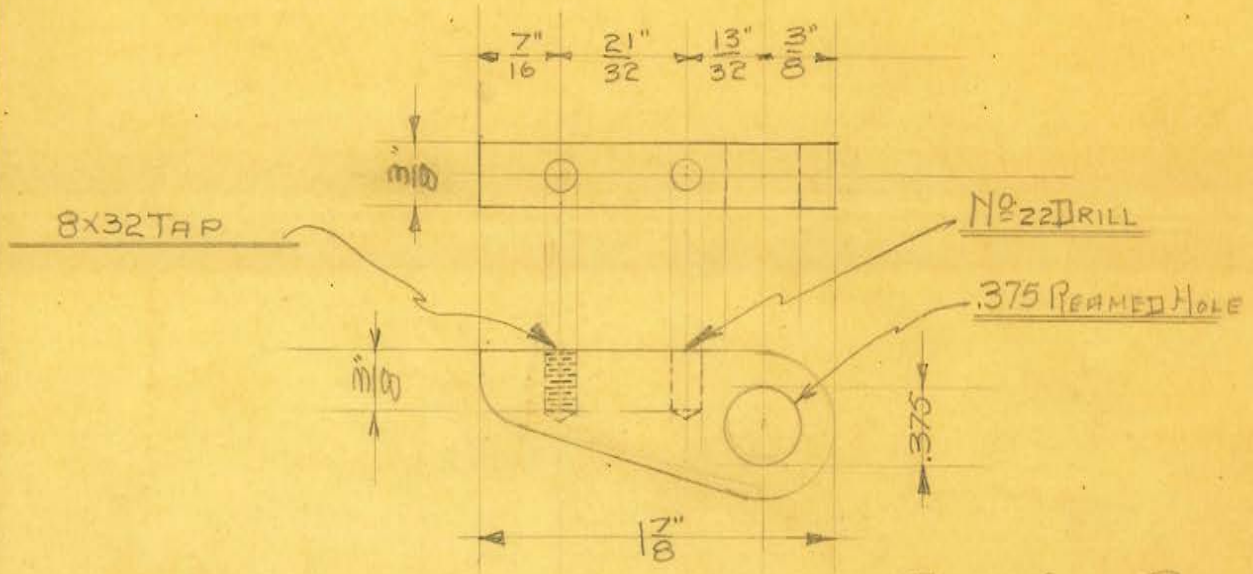


POLISH + CHROME PLATE ALL OVER

1 REQUIRED

OBSOLETE

| | | | | | | |
|---|---|---|---|---|---|---|
| SIZE | 3/16" X 3/4" BAR BRASS | ISSUE | | TITLE: UNIVERSAL "60-88" BUCKY LOCK LEVER | | |
| KIND | | CHANGED | | | | |
| SHAPE | | " " | | | | |
| FINISH | POLISH + CHROME | " " | | | | |
| TEMP. | | " " | | H. G. FISCHER & CO. 2335 WABANSIA AVE. CHICAGO, ILL. | CAT. NO. | PART NO. 8387 |
| PATT. | | " " | | | | |

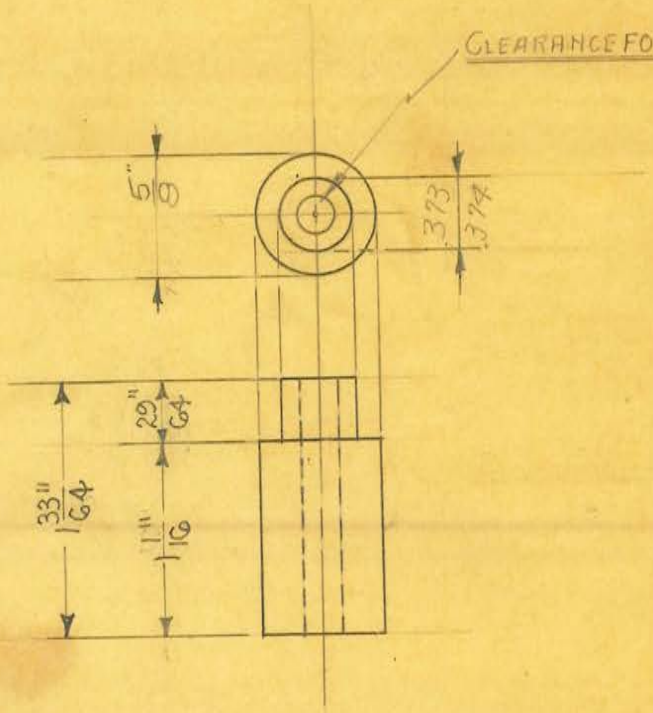


1-REQUIRED

OBSOLETE

See new Tracing

| | | | | | |
|---|---|---|---|---|---|
| SIZE | 5/8" BRASS ROD | ISSUE | | TITLE: UNIVERSAL "GO-88" BUCKY LOCK LEVER SUPPORT | |
| KIND | | CHANGED | | | |
| SHAPE | | " " | | | |
| FINISH | CAD. PLATE | " " | | | |
| TEMP. | | " " | | H. G. FISCHER & CO. 2335 WABANSIA AVE. CHICAGO, ILL. | CAT. NO. |
| PATT. | | " " | | | PART NO. 8388A |

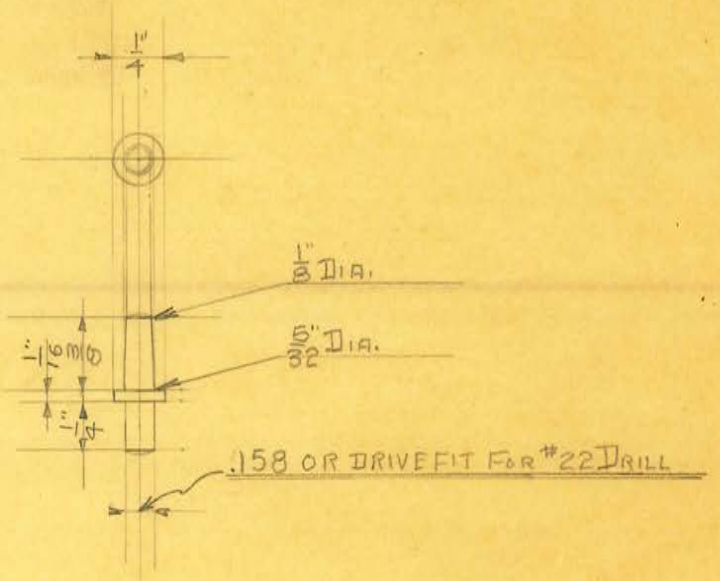


1-REQUIRED

OBSOLETE

OBSOLETE

| | | | | | | |
|---|---|---|---|---|---|---|
| SIZE | 1/4" BRASS ROD | ISSUE | | TITLE: UNIVERSAL "GO-88" BUCKY LOCK LEVER PIN | | |
| KIND | | CHANGED | | | | |
| SHAPE | | " " | | | | |
| FINISH | CAD. PLATE | " " | | | | |
| TEMP. | | " " | | H. G. FISCHER & CO. 2335 WABANSIA AVE. CHICAGO, ILL. | CAT. NO. | PART NO. 8389 |
| PATT. | | " " | | | | |

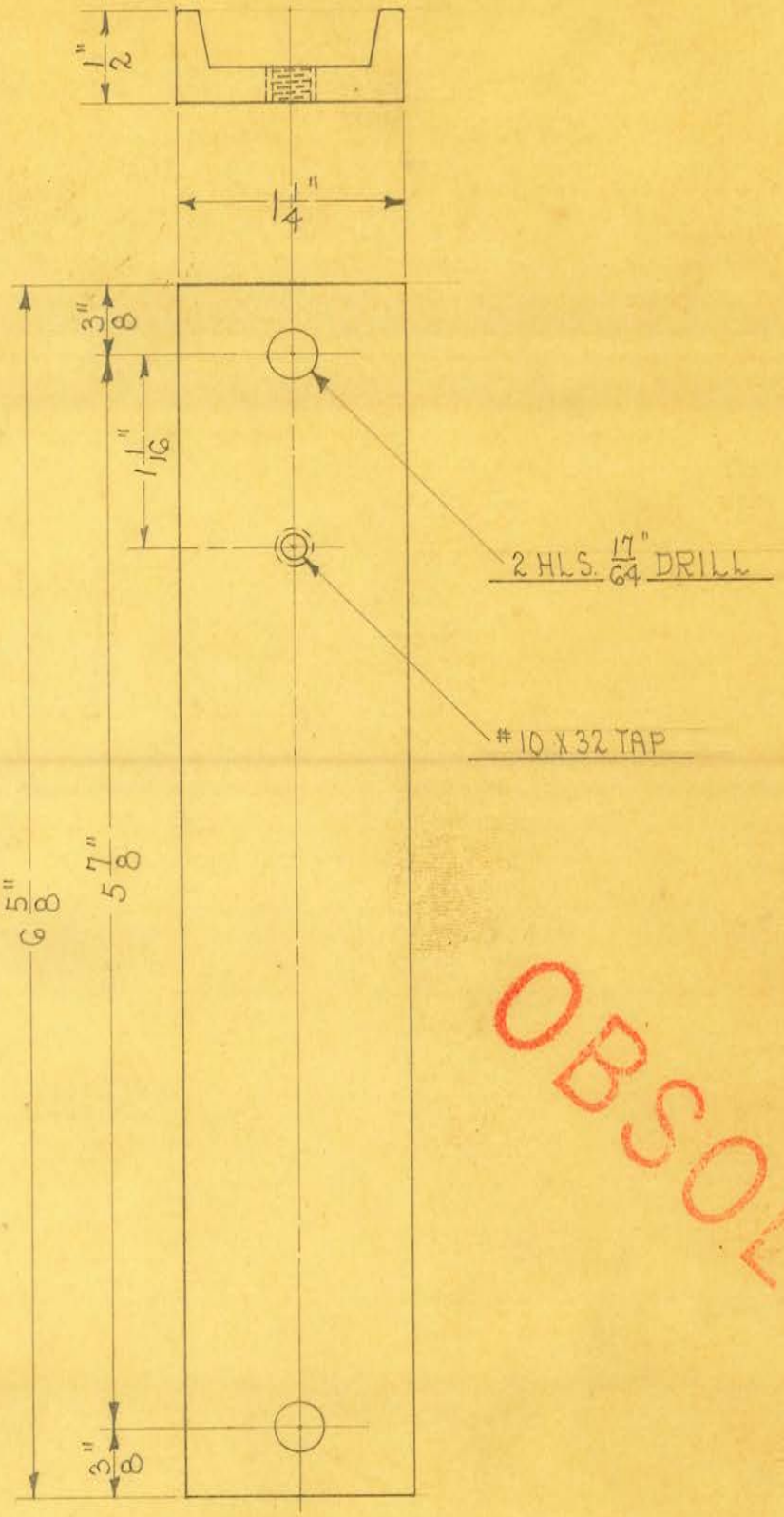


2 REQUIRED

OBSOLETE

| | | | |
|---|---|---|---|
| SIZE | | ISSUE 6-19-33 | A.E. |
| KIND | CHANNEL IRON | CHANGED | |
| SHAPE | | " " | |
| FINISH | | " " | |
| TEMP. | | " " | |
| PATT. | | " " | |

**TITLE:** UNIVERSAL "60-88" CONTROL BOX AUTO CONTROL CHANNEL IRON

H. G. FISCHER & CO.
2335 WABANSIA AVE.
CHICAGO, ILL.

CAT. NO.

PART NO. 8319

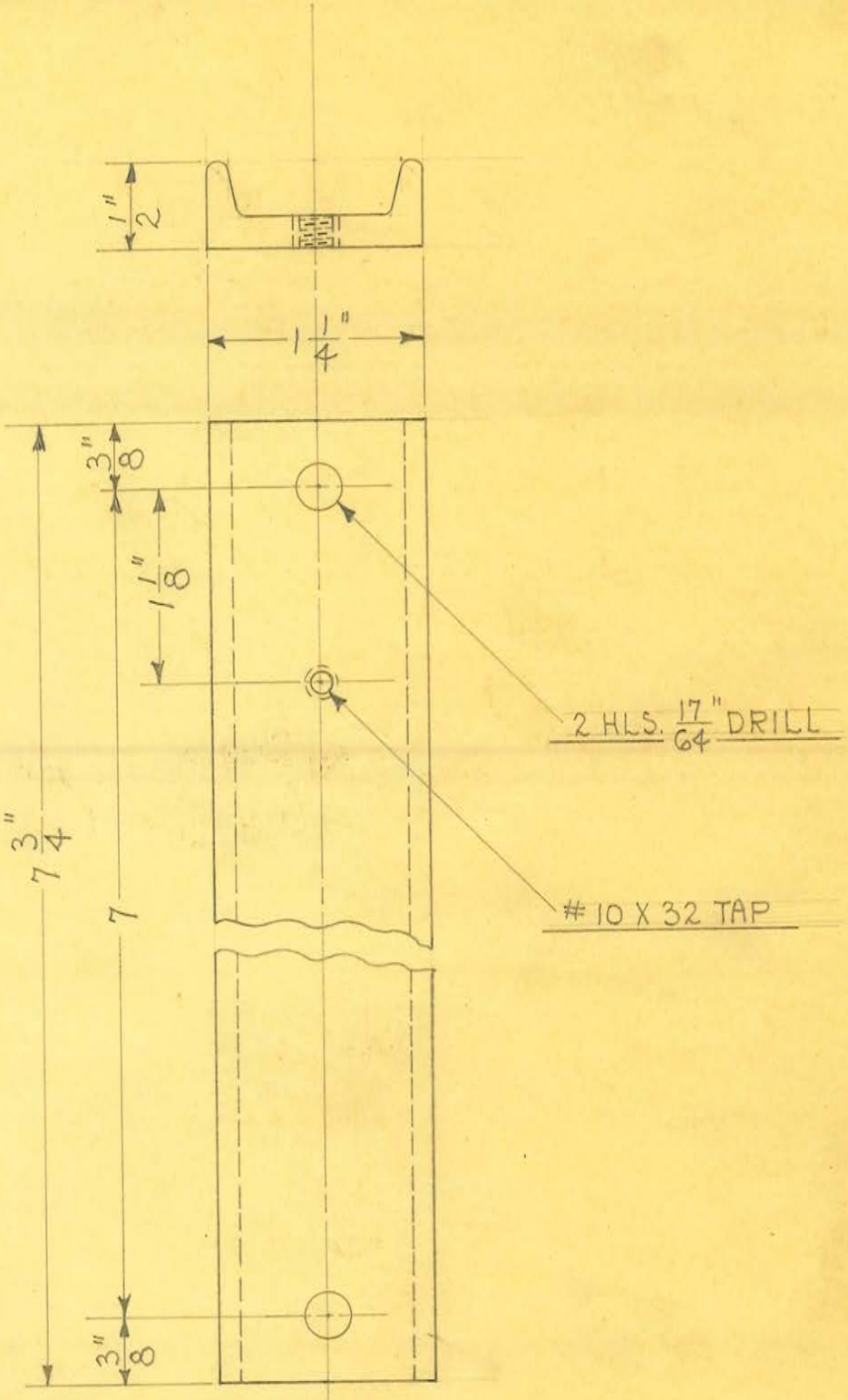


OBSOLETE

2 REQUIRED

| | | | |
|---|---|---|---|
| SIZE | | ISSUE 10-12-36 | A.E. |
| KIND | CHANNEL IRON | CHANGED | |
| SHAPE | | " | |
| FINISH | | " | |
| TEMP. | | " | |
| PATT. | | " | |

**TITLE:** 25 CYCLE UNIVERSAL "60-88" CONTROL BOX
AUTO CONTROL CHANNEL IRON

H. G. FISCHER & CO.
2335 WABANSIA AVE.
CHICAGO, ILL.

CAT. NO.

PART NO. 8319 1/2

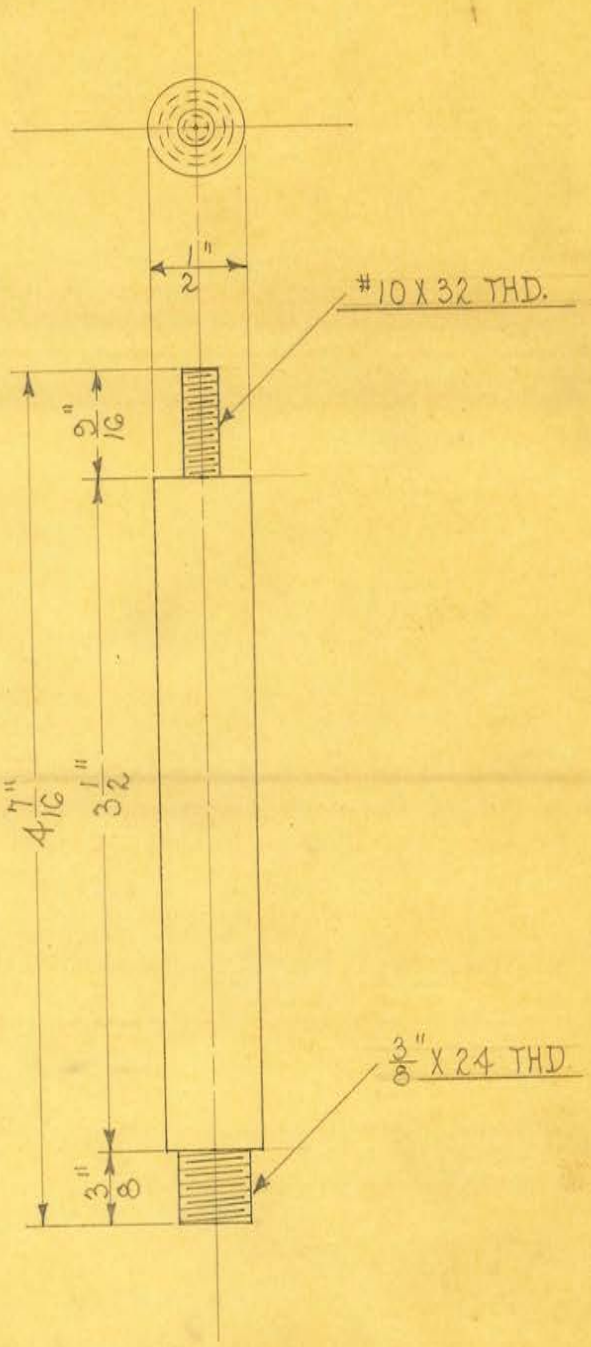


1 REQUIRED

OBSOLETE

| | | | |
|---|---|---|---|
| SIZE | 1/2" | ISSUE 6-26-33 | 7/6 |
| KIND | BRASS ROD | CHANGED | |
| SHAPE | | " " | |
| FINISH | W.P. | " " | |
| TEMP. | | " " | |
| PATT. | | " " | |

**TITLE:** UNIVERSAL "60-88" CONTROL BOX LINE SWITCH HANDLE POST

H. G. FISCHER & CO.
2335 WABANSIA AVE.
CHICAGO, ILL.

CAT. NO.

PART NO. 8321

TITLE
UNIVERSAL "60-88" CONTROL BOX CONTACTOR
CONTACT ARM - RIGHT

H. G. FISCHER & CO.
FRANKLIN PARK, ILLINOIS

DATE 8-31-54 DR BY W.J. CH'K'D. J.V.W.

PART NO. 8323 1/8 G

| REVISION | DATE | BY |
|---|---|---|
| | | |

PATTERN | FINISH | SCALE FULL

TOOLS

MATERIAL STRUTHERS - DUNN
FOR CSC1235 DUNCO RELAY

DIMENSIONS
FRACTIONAL ± .015
DECIMAL ± .005
ANGULAR ± ½°
UNLESS OTHERWISE SPECIFIED

1 REQUIRED

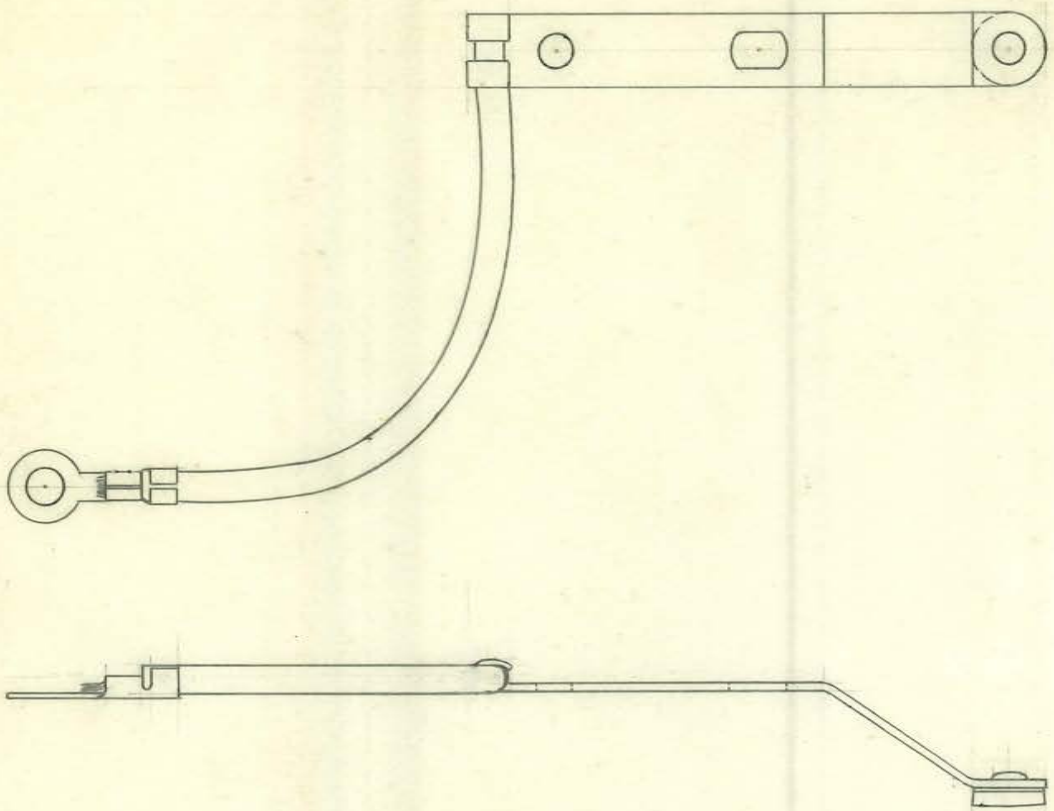

OBSOLETE

| TITLE | | | PART NO. |
|---|---|---|---|
| UNIVERSAL "60-88" CONTROL BOX CONTACTOR<br>CONTACT ARM – RIGHT | H. G. FISCHER & CO.<br>FRANKLIN PARK, ILLINOIS | | 8323 1/8 GA |
| | DATE 8-31-54 DR BY W.J. CH'K'D. J.V.W. | | REVISION / DATE / BY |
| PATTERN / FINISH / SCALE FULL | | DIMENSIONS<br>FRACTIONAL ± .015<br>DECIMAL ± .005<br>ANGULAR ± ½°<br>UNLESS OTHERWISE SPECIFIED | |
| TOOLS / MATERIAL STRUTHERS – DUNN<br>FOR CX 2303 DUNCO RELAY | | | |

1 REQUIRED

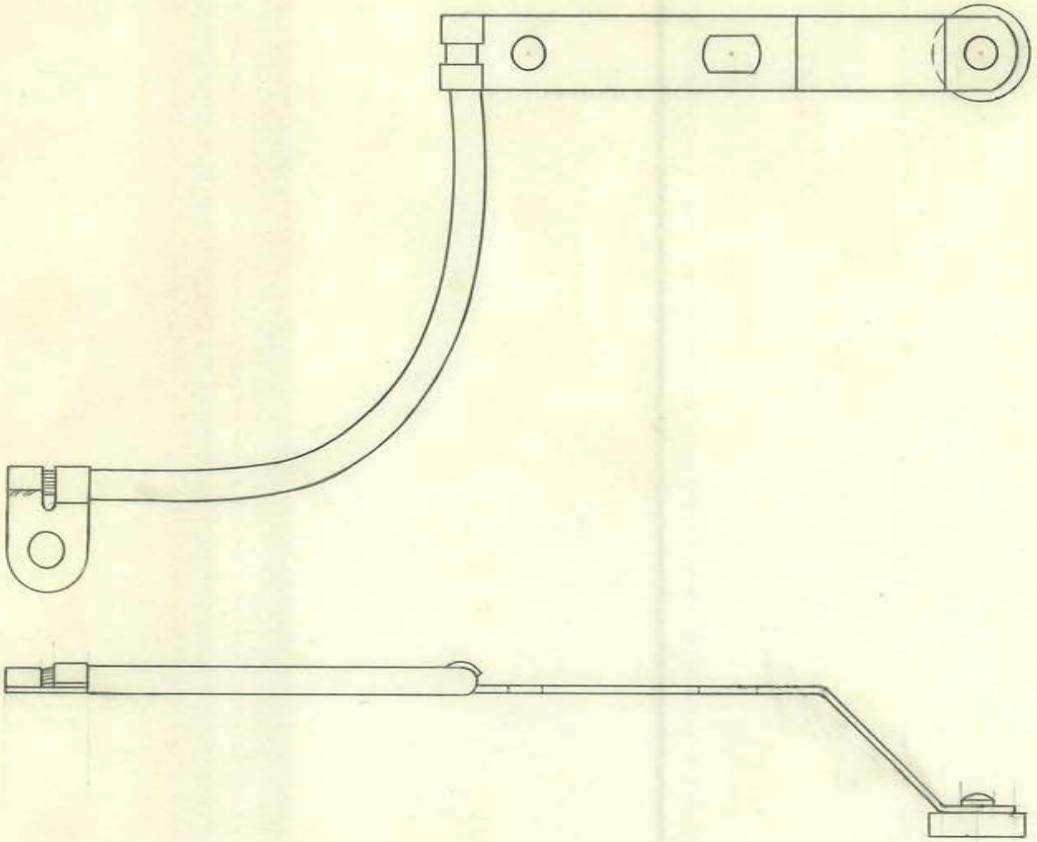

OBSOLETE

13311

2-M4516 R.H.I.

HAVE CONTACT ARM AGAINST STOP AS SHOWN & DRILL PIN HOLE, $\frac{1}{8}$" DRL. AT RIGHT ANGLE TO ARM.

1550B

8333$\frac{1}{4}$B

M878 R.H.B.

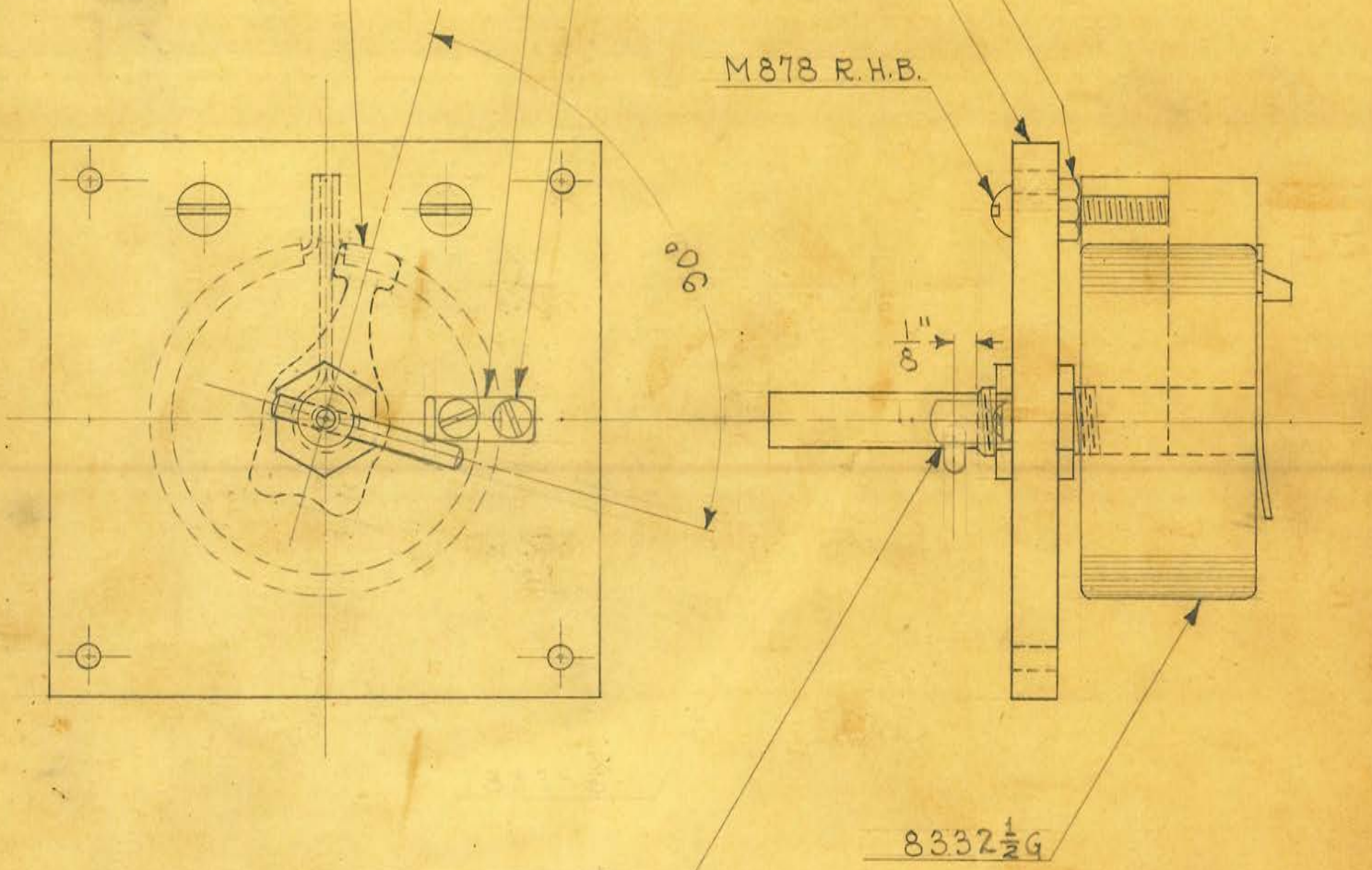


8332$\frac{1}{2}$G

13312

1 REQUIRED

OBSOLETE

| | | | | | | |
|---|---|---|---|---|---|---|
| SIZE | | ISSUE 2-16-34 | A.E. | TITLE: UNIVERSAL "60-88" CONTROL BOX RHEOSTAT (MOUNTED) | | |
| KIND | | CHANGED 3-14-39 | J.W. | | | |
| SHAPE | | " 7-10-40 | J.W. | | | |
| FINISH | | " | | | | |
| TEMP. | | " | | H. G. FISCHER & CO. 2335 WABANSIA AVE. CHICAGO, ILL. | CAT. NO. | PART NO. 8333GB |
| PATT. | | " | | | | |

#4X36 TAP

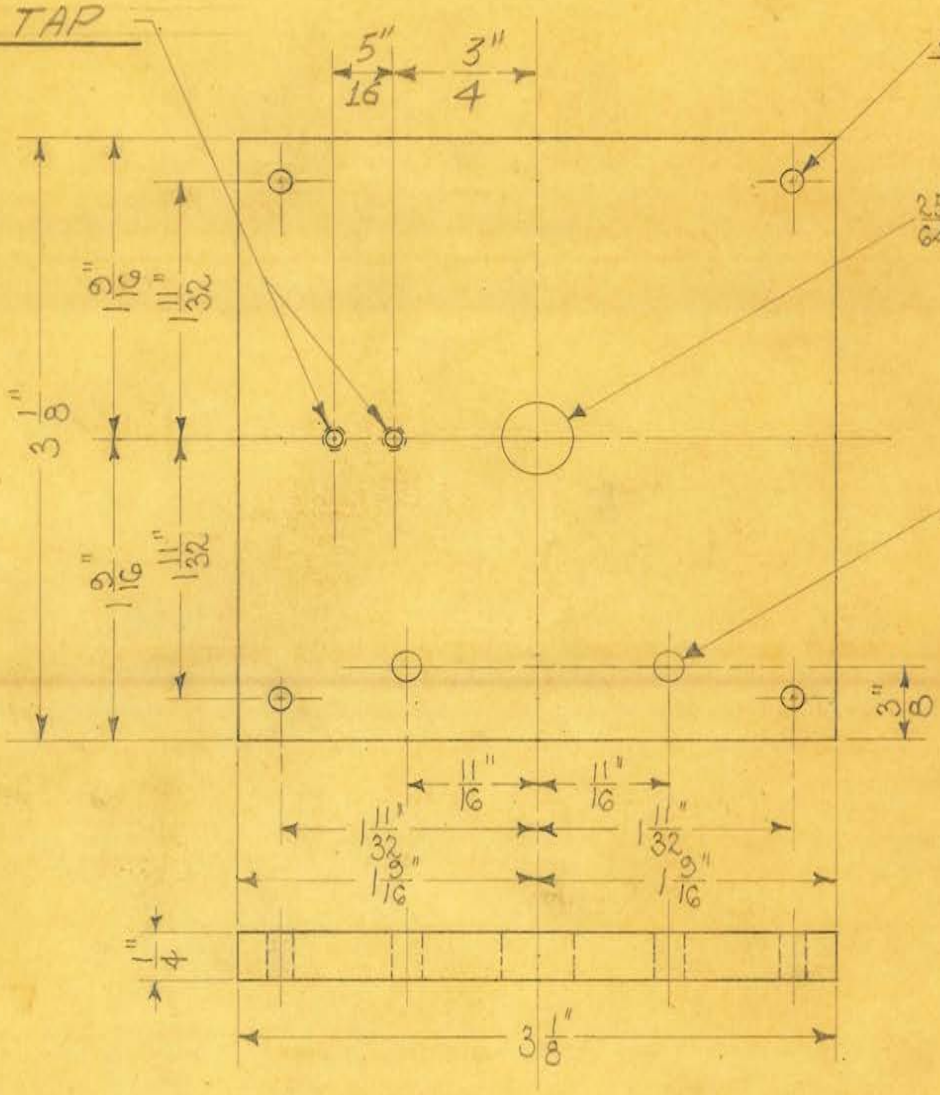


1 REQUIRED

OBSOLETE

| | | | | |
|---|---|---|---|---|
| SIZE | 1/4" (RICHELAIN) | ISSUE 9-26-33 | W.E. | **TITLE:** UNIVERSAL "GD-88" CONTROL BOX RHEOSTAT BASE |
| KIND | BAKELITE | CHANGED 8-16-37 | J.W. | |
| SHAPE | | " " 7-10-40 | J.W. | |
| FINISH | | " " | | |
| TEMP. | | " " | | H. G. FISCHER & CO. 2335 WABANSIA AVE. CHICAGO, ILL. — CAT. NO. — PART NO. 8333 1/4 B |
| PATT. | | " " | | |

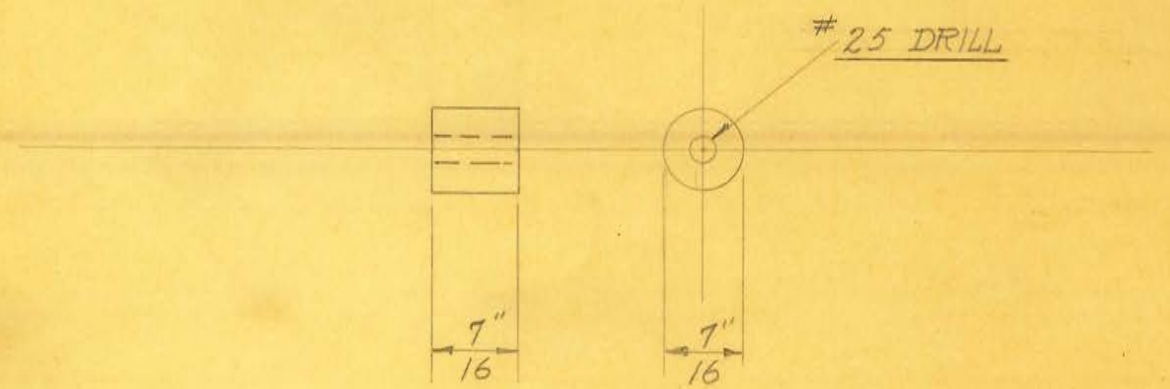


4 REQUIRED

OBSOLETE

| | | | | |
|---|---|---|---|---|
| SIZE | 7/16" ROD | ISSUE 9-13-33 | N.P. | TITLE: UNIVERSAL "60-88" CONTROLL BOX RHEOSTAT SPACER. |
| KIND | BRASS | CHANGED | | |
| SHAPE | | " " | | |
| FINISH | | " " | | |
| TEMP. | | " " | | H. G. FISCHER & CO. 2335 WABANSIA AVE. CHICAGO, ILL. / CAT. NO. / PART NO. 8933 1/2 |
| PATT. | | " " | | |

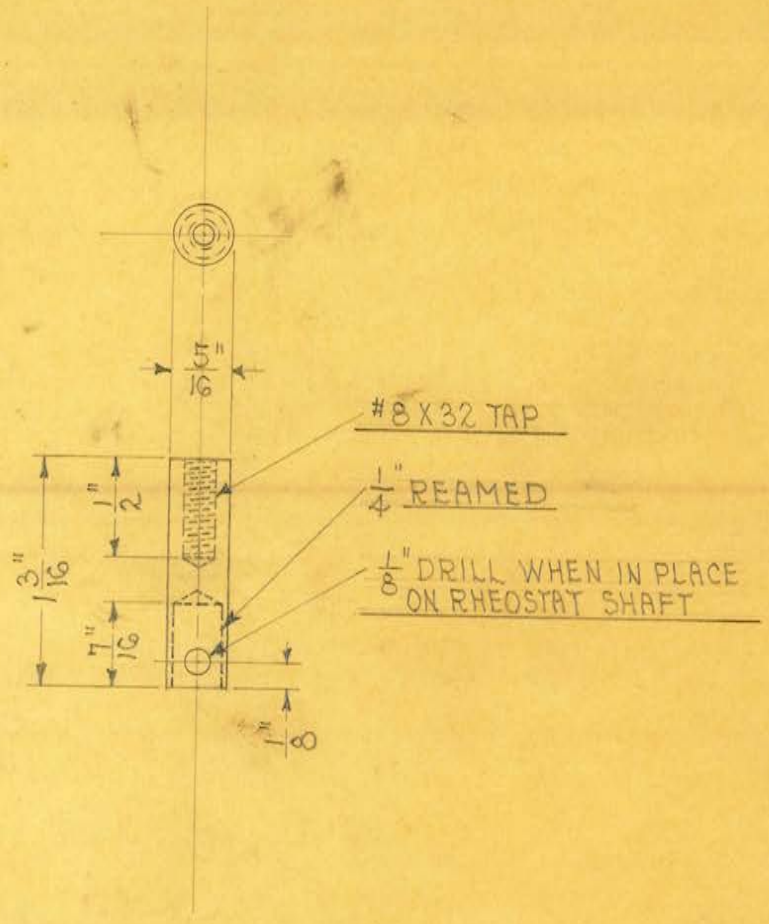


1 REQUIRED

OBSOLETE

Obsolete

| | | | | |
|---|---|---|---|---|
| SIZE | 5/16" | ISSUE 9-26-33 | A.E. | TITLE: UNIVERSAL "GO-88" CONTROL BOX RHEOSTAT SHAFT EXTENSION |
| KIND | C.R. STEEL | CHANGED | | |
| SHAPE | | " " | | |
| FINISH | | " " | | |
| TEMP. | | " " | | |
| PATT. | | " " | | |

H. G. FISCHER & CO.
2335 WABANSIA AVE.
CHICAGO, ILL.

CAT. NO.

PART NO. 8333 3/4

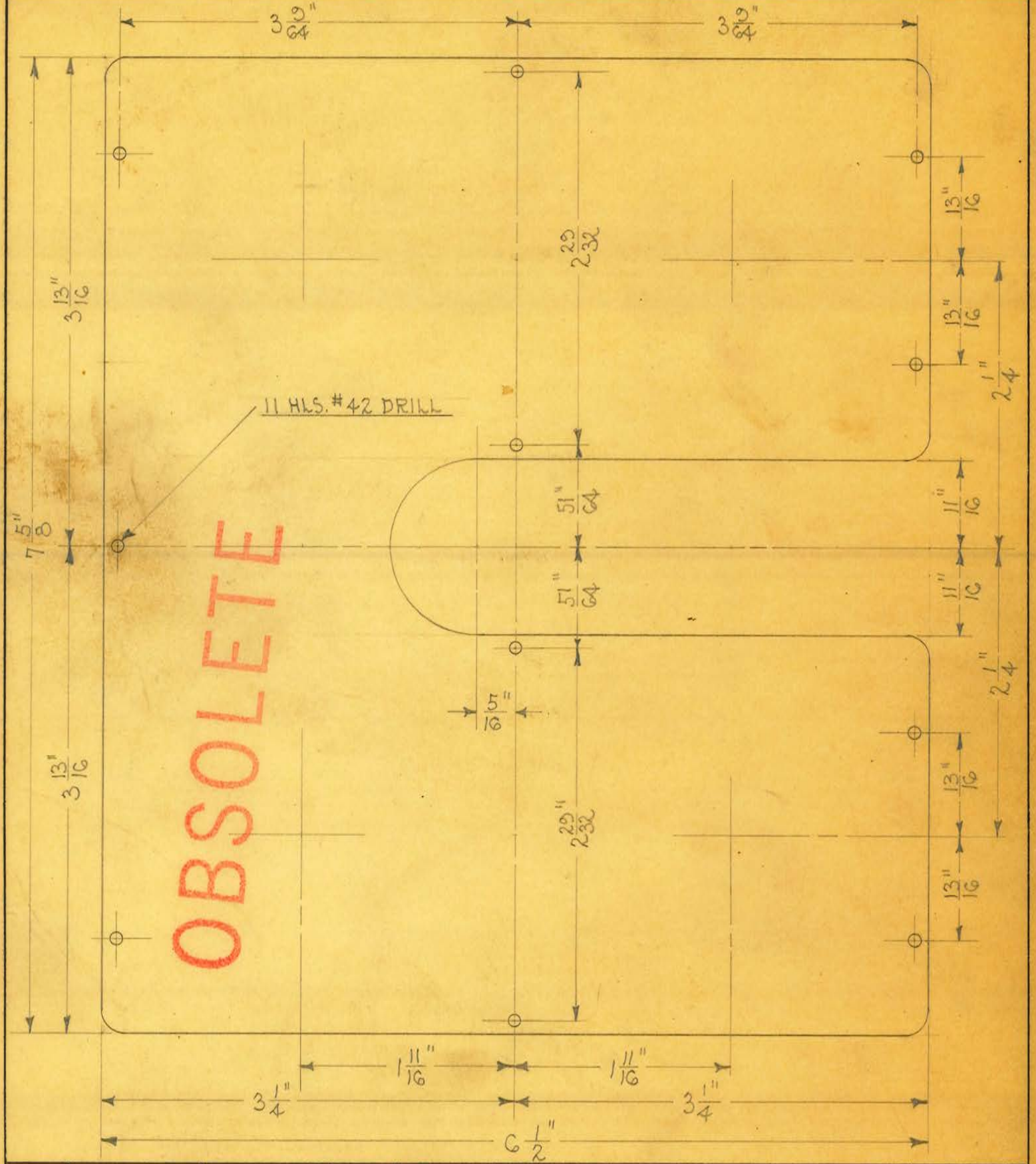


| | | | | |
|---|---|---|---|---|
| SIZE | | ISSUE | | **TITLE:** UNIVERSAL "60-88" CONTROL BOX CONTROL DIAL & NAME PLATE |
| KIND | | CHANGED | | |
| SHAPE | | " " | | |
| FINISH | | " " | | |
| TEMP. | | " " | | H. G. FISCHER & CO. 2335 WABANSIA AVE. CHICAGO, ILL. — CAT. NO. — PART NO. 8334F |
| PATT. | | " " | | |

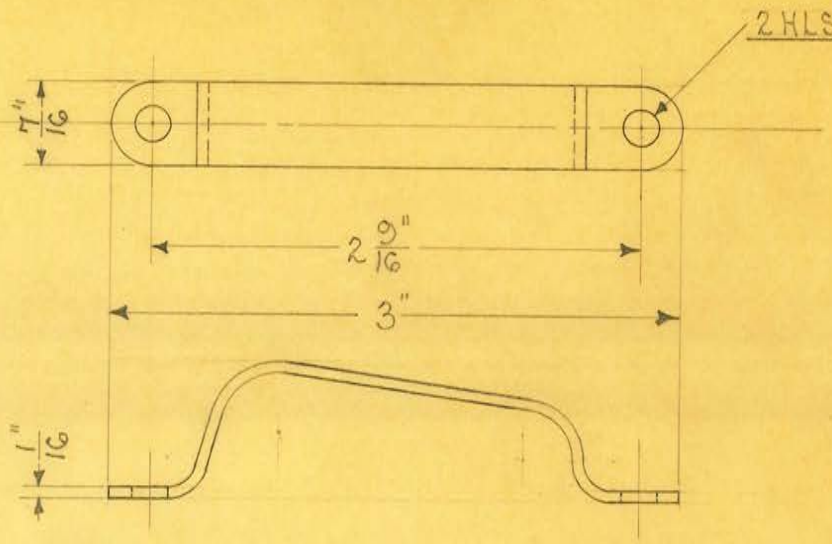


DEVELOPED LENGTH - 3 5/8"

FORMIING FIXTURE #3487

1 REQUIRED

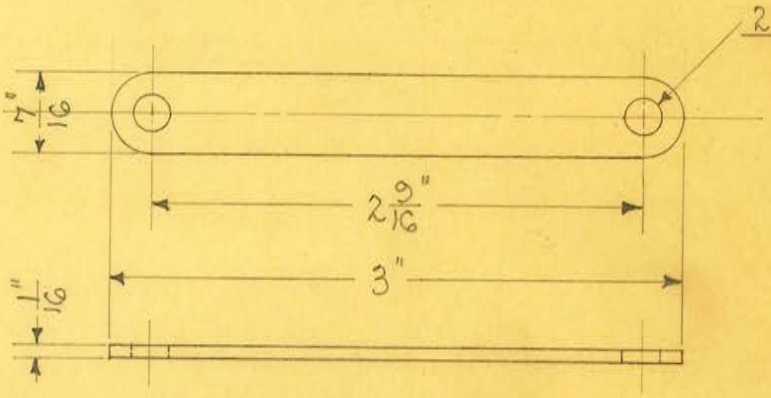


1 REQUIRED

OBSOLETE

| | | | | |
|---|---|---|---|---|
| SIZE | 1/16" X 7/16" | ISSUE 10-26-33 | J.E. | TITLE: UNIVERSAL "60-88" CONTROL BOX CABLE CLAMP SET |
| KIND | FLAT WIRE | CHANGED | | |
| SHAPE | | " | | |
| FINISH | DU-LITE #8 | " | | |
| TEMP. | | " | | H. G. FISCHER & CO. 2335 WABANSIA AVE. CHICAGO, ILL. — CAT. NO. — PART NO. 8337 |
| PATT. | | " | | |

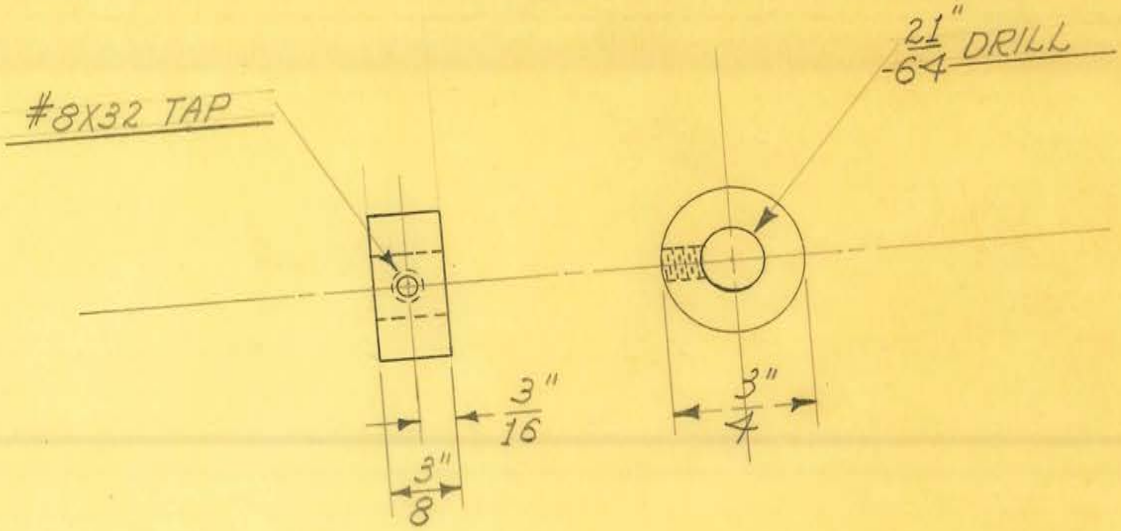


1 REQUIRED

OBSOLETE

| | | | | |
|---|---|---|---|---|
| SIZE | 3/4" DIAM. | ISSUE 2-8-37 | J.W. | |
| KIND | BRASS ROD | CHANGED | | |
| SHAPE | | " | | |
| FINISH | CHROME #2 | " | | |
| TEMP. | | " | | |
| PATT. | | " | | |

TITLE: "60-88" STEREOSCOPIC SHIFT CLAMP RING

H. G. FISCHER & CO.
2335 WABANSIA AVE.
CHICAGO, ILL.

CAT. NO.

PART NO. 8338 1/2

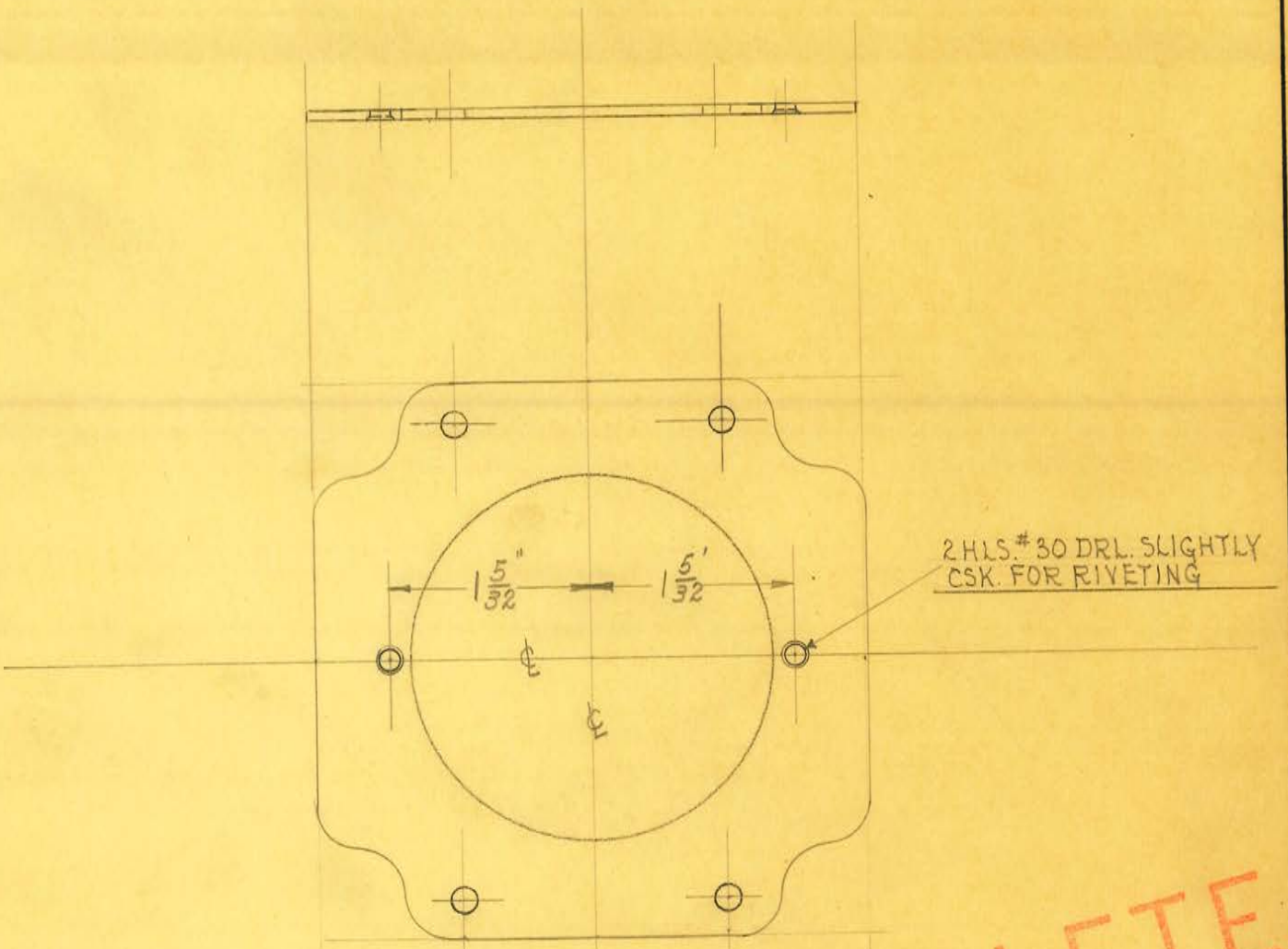


1 REQUIRED

FROM 2243¼

OBSOLETE

| | | | | |
|---|---|---|---|---|
| SIZE | 1/16" SHEET | ISSUE 10-25-33 | N.P. | TITLE: UNIVERSAL "60-88" CONTROL BOX 5 POINT SWITCH CONTACT RING |
| KIND | BRASS | CHANGED | | |
| SHAPE | | " | | |
| FINISH | | " | | |
| TEMP. | | " | | |
| PATT. | | " | | |

H. G. FISCHER & CO.
2335 WABANSIA AVE.
CHICAGO, ILL.

CAT. NO.

PART NO. 8339½

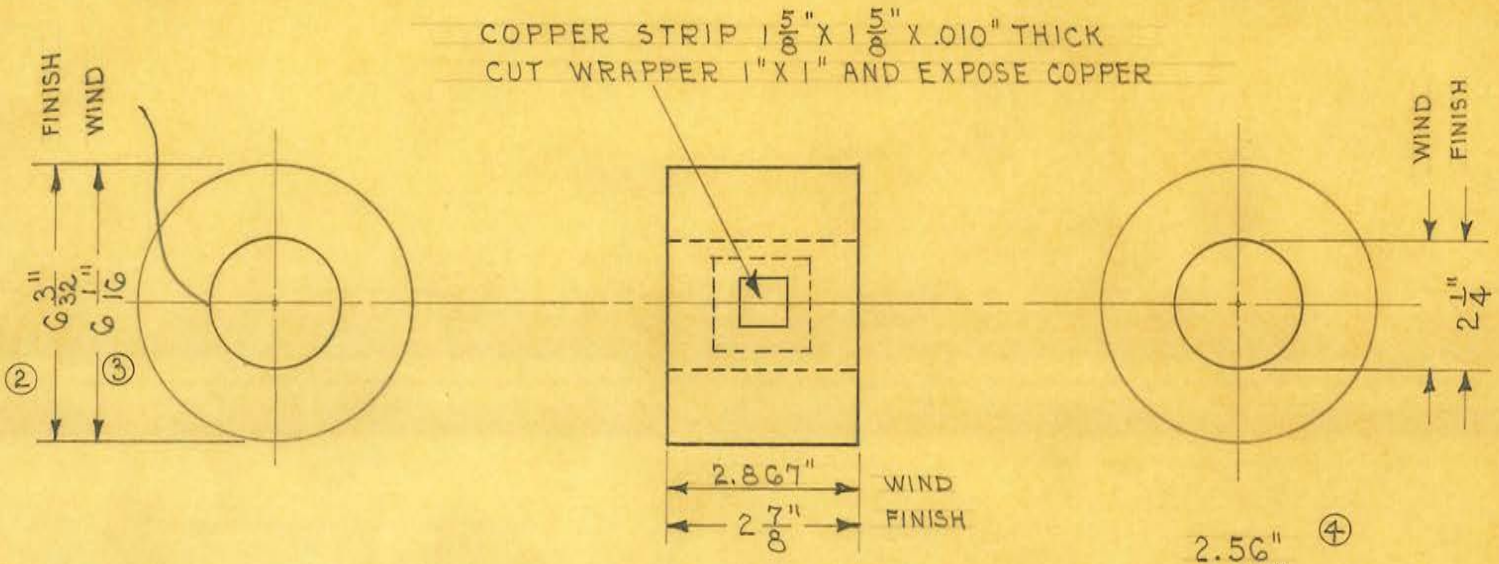


DO NOT SCALE DRAWING - WORK TO DIMENSIONS GIVEN.

SOLDER #34 WIRE TO #30 WIRE TO FORM ONE CONTINUOUS WINDING. INSULATE UNDER COPPER STRIP WITH .007" V.C. OUTSIDE END OF #30 WIRE SOLDERED TO COPPER STRIP.

| COIL SECTION | SURGE (17) | SECONDARY (13) | SURGE (17) |
|---|---|---|---|
| TAPS | | | |
| TURNS | 75 | 41,040 ⑤ | 75 |
| SIZE WIRE | #30 (.0100") DCE | #34 (.0063") ENAM. | #30 (.0100") DCE |
| WINDING LENGTH | 2.367" | 2.367" | 2.367" |
| TURNS PER LAYER | 75----1L | 285--83%--144L ⑥ | 75----1L |
| TUBE | 8L .010" G.K. | SURGE WRAP. | SEC. WRAP. |
| PAPER | 5-4-3-4-5 OF .0015" G | | |
| KIND LEAD | 16s #34 SIL. BRD. (INS.) SEE SKETCH (OUTSIDE) | | |
| LENGTH LEAD | 18" | | |
| WRAPPER | 2L .005" V.P. | 2L .005" V.P. | SEE SKETCH 1L .005" G.K. |
| INSULATION | E-86 SEE REMARKS | | |
| RESISTANCE | | | |
| TREATMENT | SCHENECTADY #31 VARNISH \| DIP \| BAKE E-69 ① | | |
| TESTS | CONTINUITY, TURNS, SPARK AND MARGINS | | |

CHANGE RECORD

| | WAS | DATE |
|---|---|---|
| (1) | ADD E# ⓒ MC | 4-25-33 |
| (2) | G 1/32" | |
| (3) | 6" | CHI. LET. 7-29 |
| (4) | INCREASED CAL. | |
| (5) | 39,900 | |
| (6) | 140L ⓒ | 8-4-33 |

OBSOLETE

| | | | |
|---|---|---|---|
| SIZE | | ISSUE 2-24-34 | H.E. |
| KIND | | CHANGED | |
| SHAPE | | " | |
| FINISH | | " | |
| TEMP. | | " | |
| PATT. | | " | |

**TITLE:** UNIVERSAL "60-88" TRANS. SECONDARY COIL

H. G. FISCHER & CO.
2335 WABANSIA AVE.
CHICAGO, ILL.

CAT. NO.

PART NO. 8341 1/2

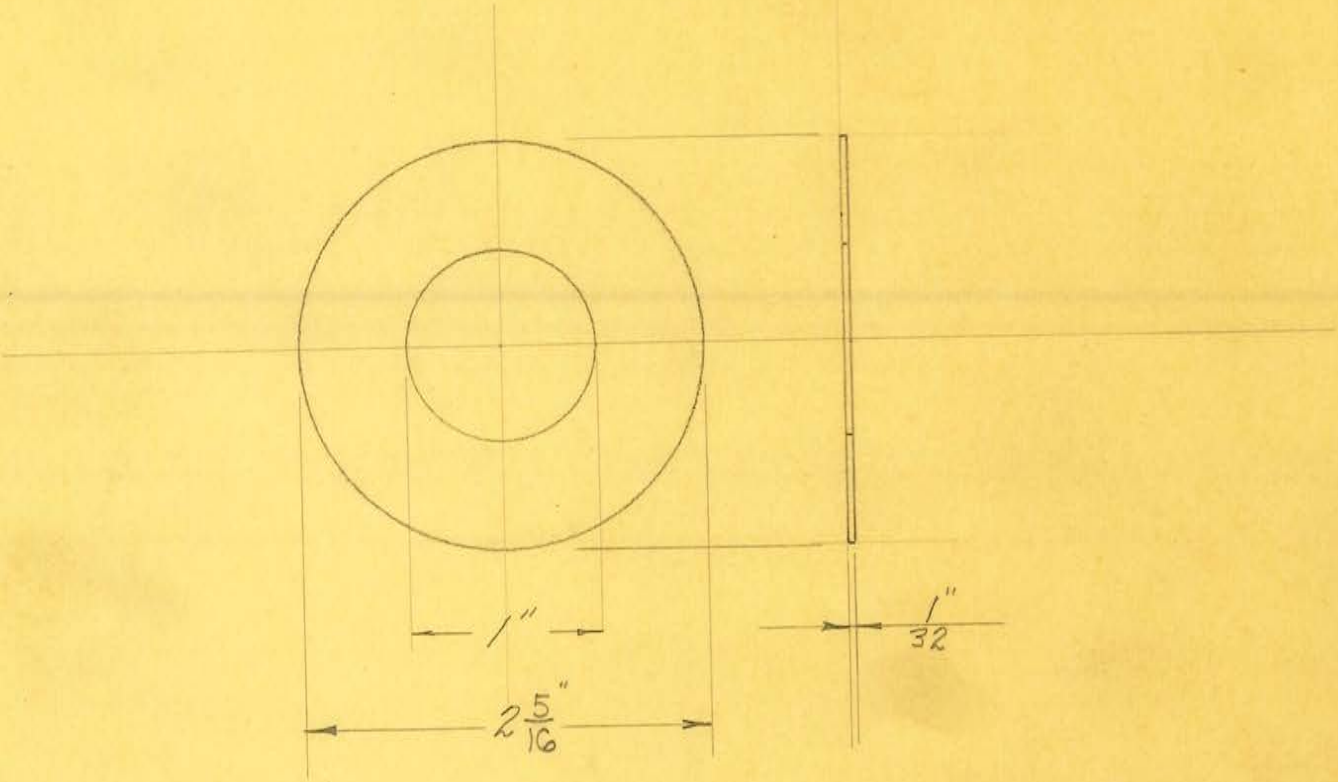


2 REQUIRED

OBSOLETE

| | | | | |
|---|---|---|---|---|
| SIZE | 1/32 SHEET | ISSUE 10-25-33 | N.P. | TITLE: UNIVERSAL "60-88" FILAMENT TRANSFORMER FULLERBOARD WASHER |
| KIND | FULLERBOARD | CHANGED | | |
| SHAPE | | " | | |
| FINISH | | " | | |
| TEMP. | | " | | |
| PATT. | | " | | |

H. G. FISCHER & CO.
2335 WABANSIA AVE.
CHICAGO, ILL.

CAT. NO.

PART NO. 8344

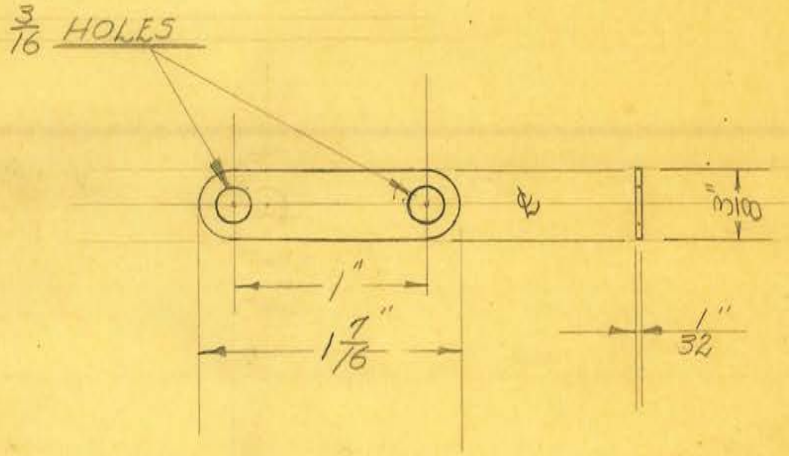


1 REQUIRED

OBSOLETE

OBSOLETE

| | | | |
|---|---|---|---|
| SIZE | 1/32 THICK | ISSUE 10-30-33 | N.P. |
| KIND | BRASS | CHANGED | |
| SHAPE | | " | |
| FINISH | | " | |
| TEMP. | | " | |
| PATT. | | " | |

TITLE: UNIVERSAL 60-88 ~ TRANSFORMER ADJUSTABLE SPHERE GAP BALL GROUND STRIP

H. G. FISCHER & CO.
2335 WABANSIA AVE.
CHICAGO, ILL.

CAT. NO.

PART NO. 8347 1/4

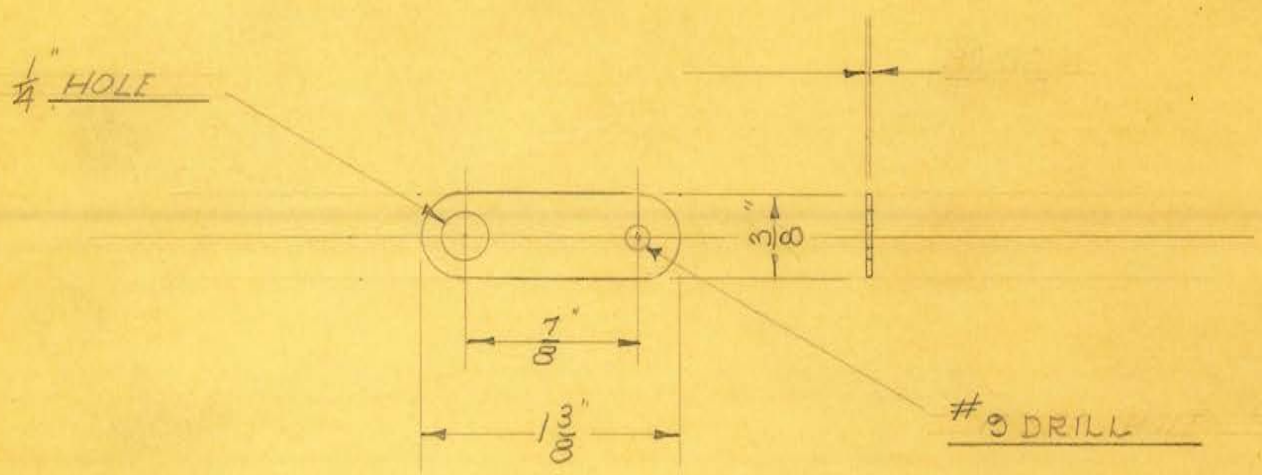


OBSOLETE

| | | | | |
|---|---|---|---|---|
| SIZE | 1/32" STRIP | ISSUE 9-13-33 | N.P. | TITLE: UNIVERSAL "CO-88" TRANS. GROUND STRIP |
| KIND | BRASS | CHANGED | | |
| SHAPE | | " " | | |
| FINISH | | " " | | |
| TEMP. | | " " | | H. G. FISCHER & CO. 2335 WABANSIA AVE. CHICAGO, ILL. — CAT. NO. — PART NO. 8347½ |
| PATT. | | " " | | |

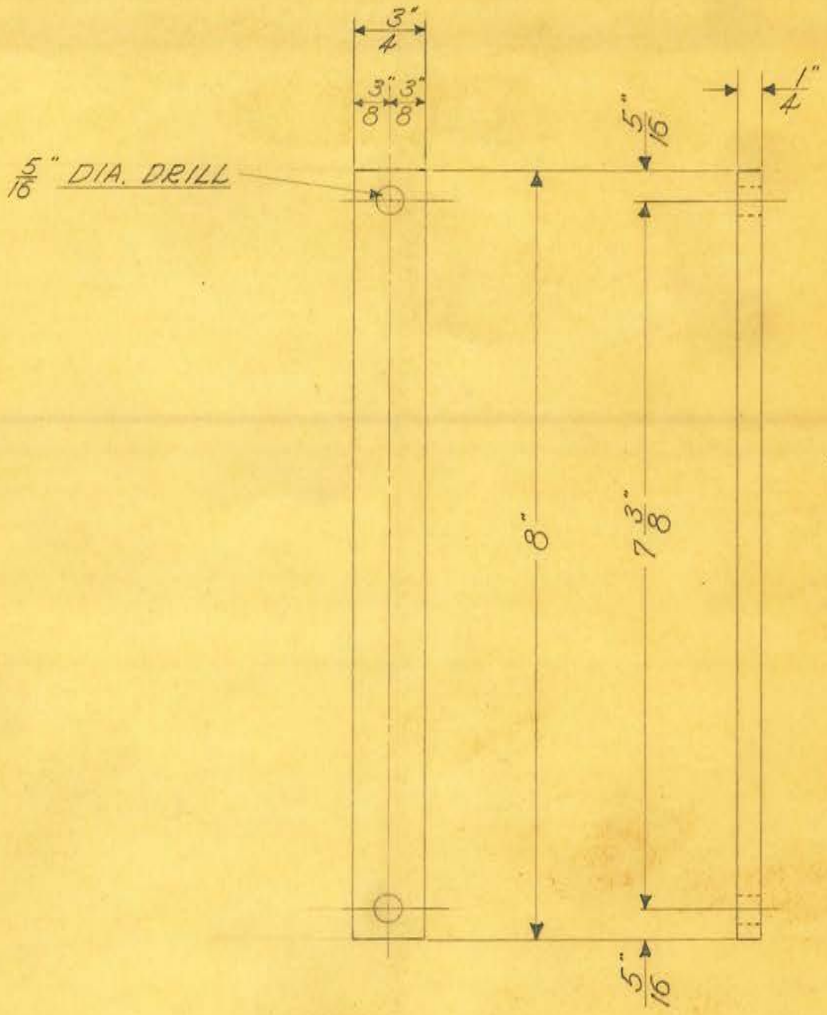


SCALE ~ HALF SIZE

2 REQUIRED

OBSOLETE

| | | | | |
|---|---|---|---|---|
| SIZE | 1/4 x 3/4 | ISSUE 2-4-33 | F.T.M. | **TITLE:** UNIVERSAL "60-88" HIGH TENSION TRANSFORMER STRAP |
| KIND | C.R. STEEL | CHANGED | | |
| SHAPE | | " " | | |
| FINISH | | " " | | |
| TEMP. | | " " | | H. G. FISCHER & CO. 2335 WABANSIA AVE. CHICAGO, ILL. — CAT. NO. — PART NO. 8351 |
| PATT. | | " " | | |

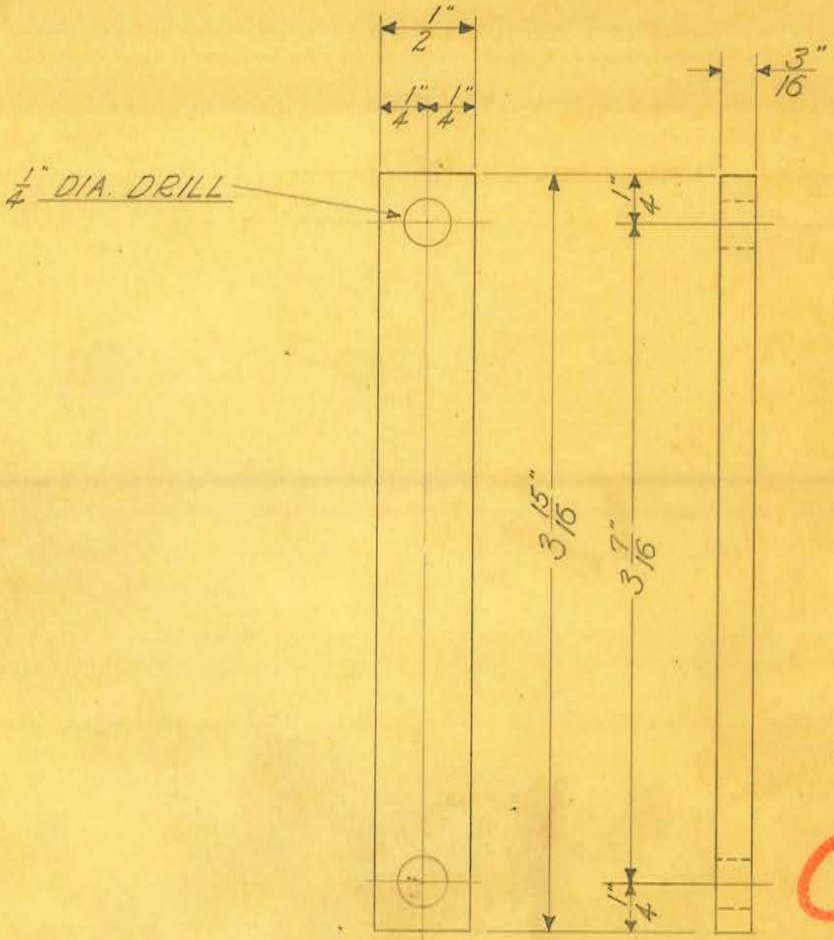


SCALE ÷ FULL SIZE

2 REQUIRED

OBSOLETE

| | | | | |
|---|---|---|---|---|
| SIZE | 3/16 × 1/2 | ISSUE 2-4-33 | F.T.M. | **TITLE:** UNIVERSAL "60-88" FILAMENT TRANSFORMER STRAP |
| KIND | C.R. STEEL | CHANGED | | |
| SHAPE | | " " | | |
| FINISH | | " " | | |
| TEMP. | | " " | | |
| PATT. | | " " | | |

H. G. FISCHER & CO.
2335 WABANSIA AVE.
CHICAGO, ILL.

CAT. NO.

PART NO. 8352

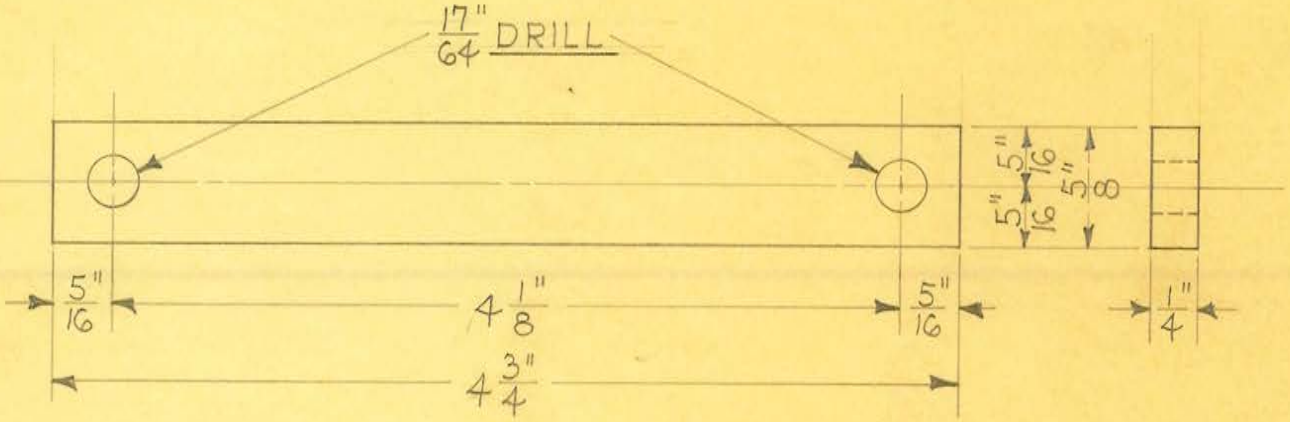


2 REQUIRED

OBSOLETE

| | | | |
|---|---|---|---|
| SIZE | 5/8" X 1/4" | ISSUE 10-28-36 | W.E. |
| KIND | C.R. STEEL | CHANGED | |
| SHAPE | | " | |
| FINISH | | " | |
| TEMP. | | " | |
| PATT. | | " | |

**TITLE:** 25 CYCLE "60-88" FILAMENT TRANSF. STRAP

H. G. FISCHER & CO.
2335 WABANSIA AVE.
CHICAGO. ILL.

CAT. NO.

PART NO. 8352 1/2

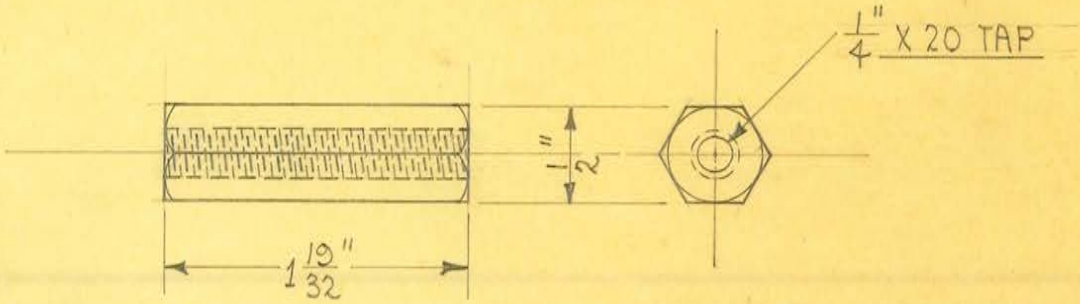


2 REQUIRED

OBSOLETE

| | | | |
|---|---|---|---|
| SIZE | 1/2" HEX. | ISSUE 10-29-36 | A.E. |
| KIND | C.R. STEEL | CHANGED | |
| SHAPE | | " | |
| FINISH | | " | |
| TEMP. | | " | |
| PATT. | | " | |

**TITLE:**
25 CYCLE "60-88" TRANSFORMER
SUPPORT NUT

| | | |
|---|---|---|
| H. G. FISCHER & CO.<br>2335 WABANSIA AVE.<br>CHICAGO, ILL. | CAT. NO. | PART NO. 8353 1/2 |

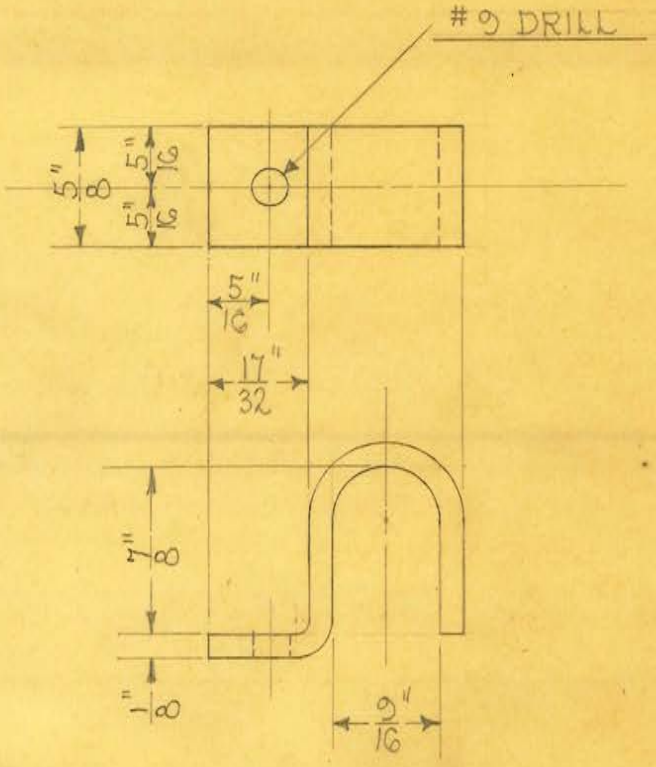


1 REQUIRED

DEVELOPED LENGTH- 2 7/8"

OBSOLETE

| | | | | | |
|---|---|---|---|---|---|
| SIZE | 5/8" X 1/8" | ISSUE 6-20-33 | H.E. | TITLE: UNIVERSAL '60-88" TRANS. PRIMARY LEADS CLAMP | |
| KIND | FLAT WIRE | CHANGED | | | |
| SHAPE | | " " | | | |
| FINISH | BLACK #70 | " " | | | |
| TEMP. | | " " | | | |
| PATT. | | " " | | | |

H. G. FISCHER & CO.
2335 WABANSIA AVE.
CHICAGO, ILL.

CAT. NO.

PART NO. 8353

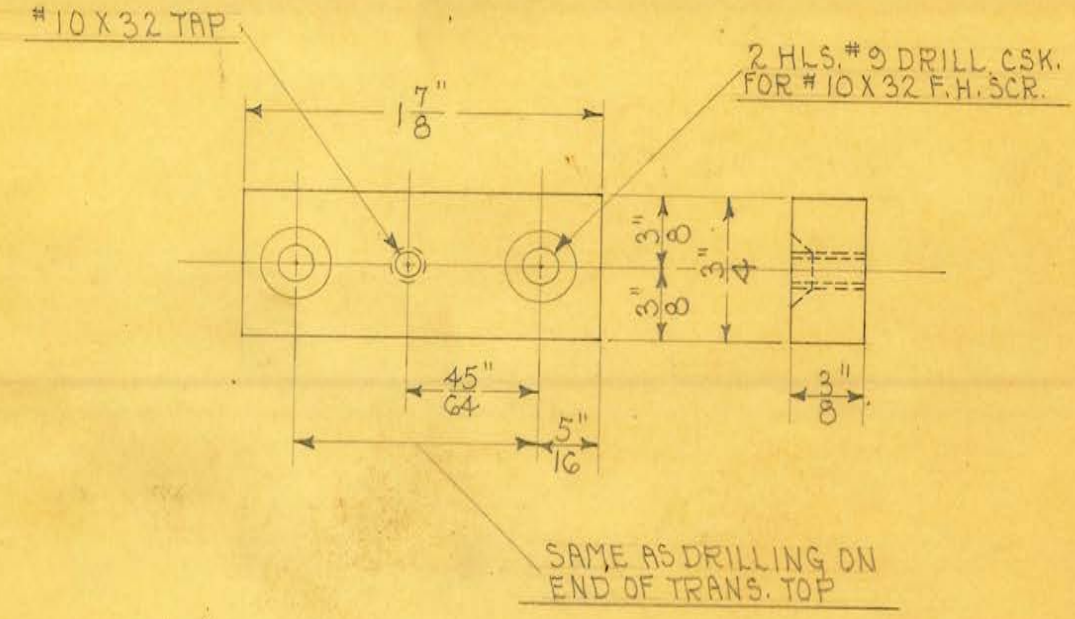


1 REQUIRED

OBSOLETE

| | | | | |
|---|---|---|---|---|
| SIZE | 3/4" X 3/8" | ISSUE 9-15-33 | A.E. | TITLE: UNIVERSAL "60-88" TRANS. PRIMARY LEADS CLAMP SUPPORT BLOCK |
| KIND | C.R. STEEL | CHANGED | | |
| SHAPE | | " " | | |
| FINISH | BLK. LACQUER | " " | | |
| TEMP. | | " " | | H. G. FISCHER & CO. 2335 WABANSIA AVE. CHICAGO, ILL. — CAT. NO. — PART NO. 8354 |
| PATT. | | " " | | |

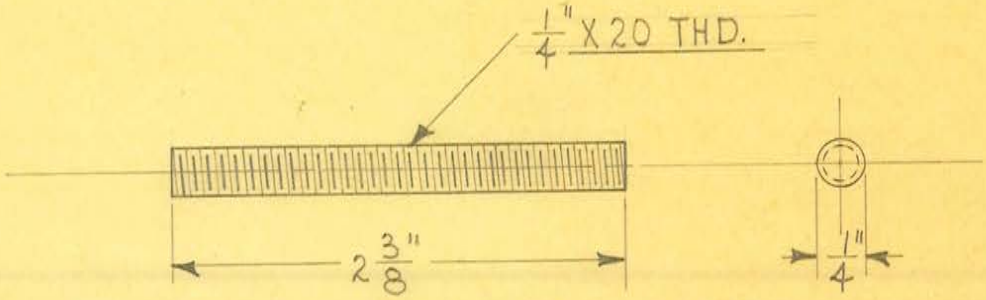


2 REQUIRED

OBSOLETE

| | | | | |
|---|---|---|---|---|
| SIZE | 1/4" DIAM. | ISSUE 10-29-36 | A.E. | TITLE: 25 CYCLE "60-88" FILAMENT TRANSF. STUD |
| KIND | C.R. STEEL | CHANGED | | |
| SHAPE | | " | | |
| FINISH | | " | | |
| TEMP. | | " | | |
| PATT. | | " | | |

H. G. FISCHER & CO.
2335 WABANSIA AVE.
CHICAGO, ILL.

CAT. NO.

PART NO. 8354 1/2

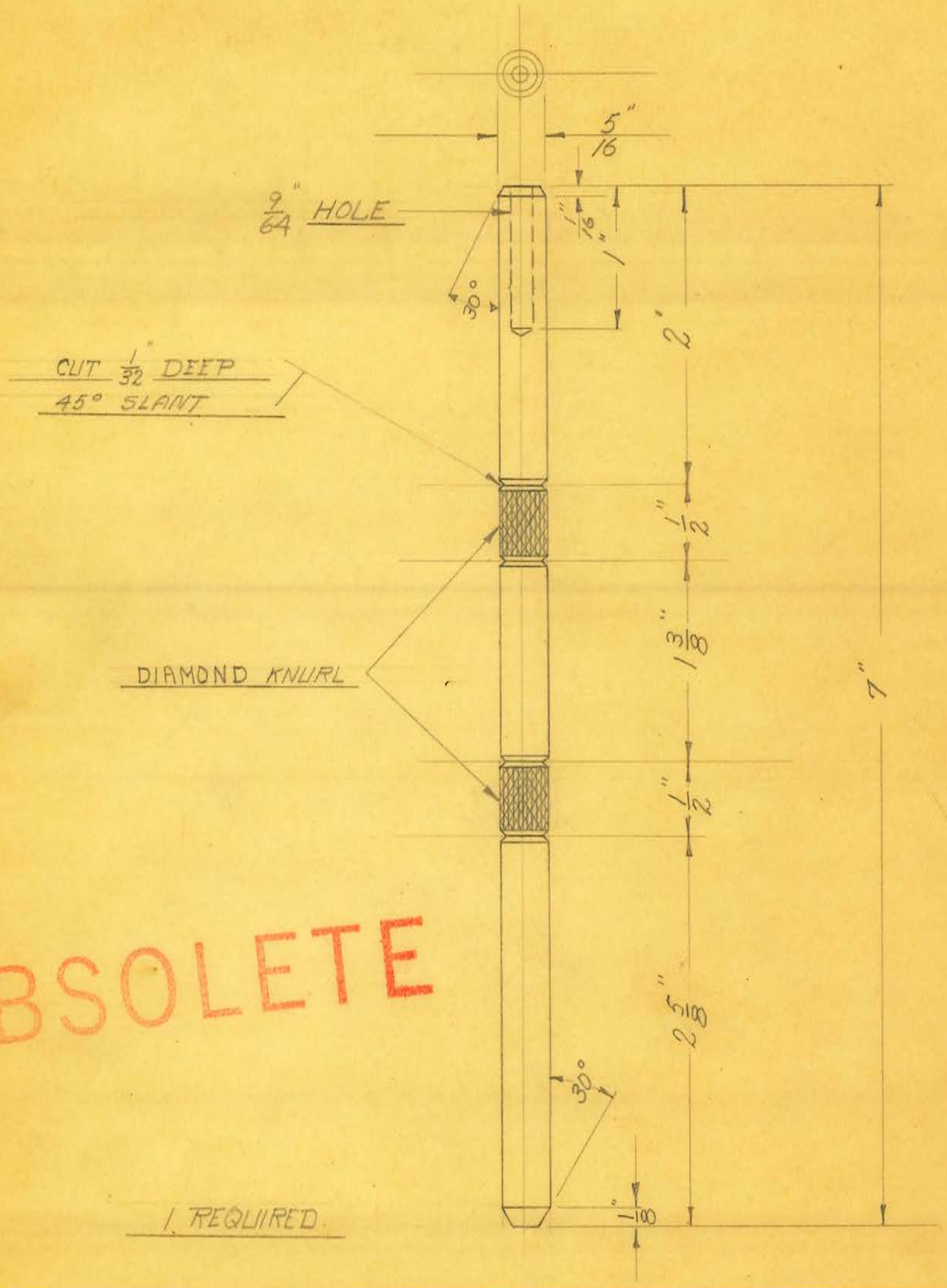


OBSOLETE

| | | | |
|---|---|---|---|
| SIZE | 5/16 ROD | ISSUE 9-18-33 | N.P. |
| KIND | BRASS | CHANGED | |
| SHAPE | | " " | |
| FINISH | | " " | |
| TEMP. | | " " | |
| PATT. | | " " | |

**TITLE:** UNIVERSAL 60-88 TRANS. H.T. POST INSERT - PLAIN.

H. G. FISCHER & CO.
2335 WABANSIA AVE.
CHICAGO, ILL.

CAT. NO.

PART NO. 8356

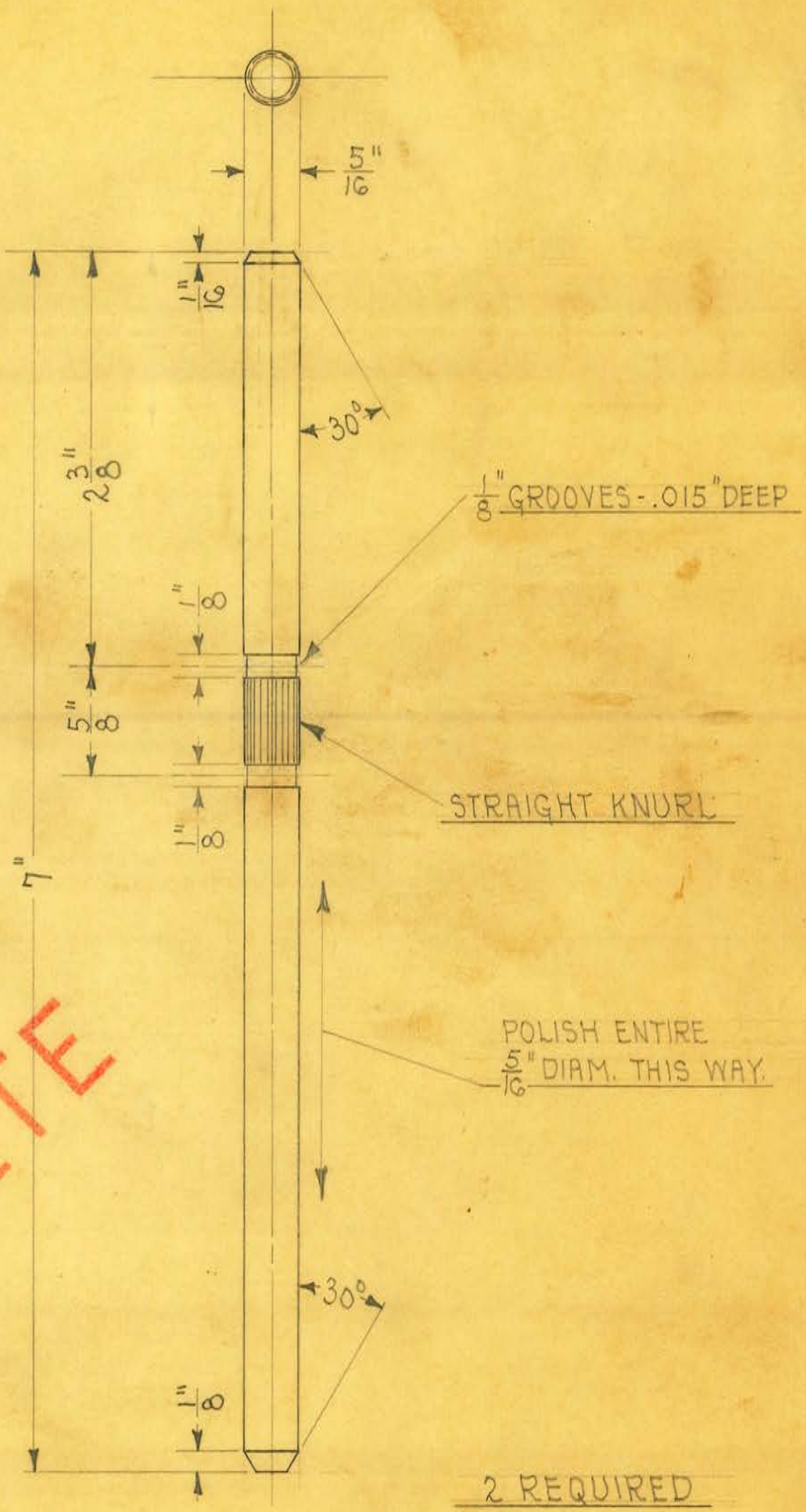


OBSOLETE

2 REQUIRED

| | | | | |
|---|---|---|---|---|
| SIZE | 5/16" DIA. | ISSUE 4-4-34 | H.E. | **TITLE:** UNIVERSAL "60-88" TRANS. H.T. POST INSERT |
| KIND | BRASS ROD | CHANGED 8-28-35 | H.E. | |
| SHAPE | | " | | |
| FINISH | | " | | |
| TEMP. | | " | | |
| PATT. | | " | | |

H. G. FISCHER & CO.
2335 WABANSIA AVE.
CHICAGO, ILL.

CAT. NO.

PART NO. 8356A

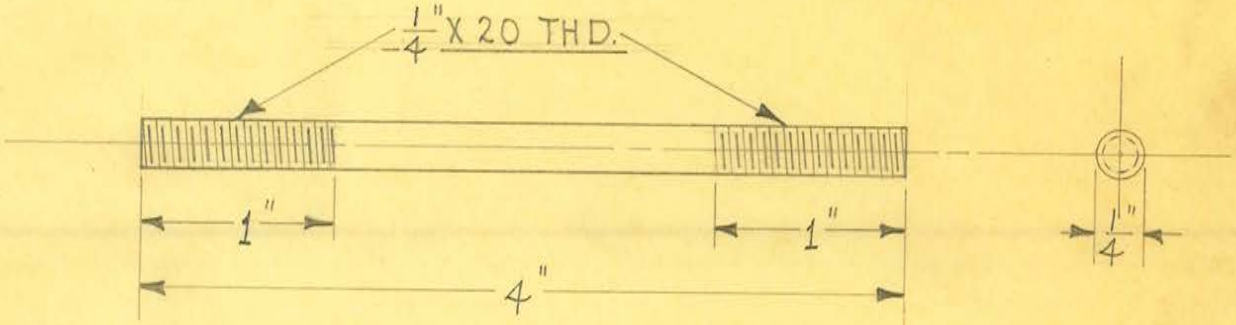


4 REQUIRED

OBSOLETE

| | | | |
|---|---|---|---|
| SIZE | 1/4" DIAM. | ISSUE 10-29-36 | H.E. |
| KIND | C.R. STEEL | CHANGED | |
| SHAPE | | " | |
| FINISH | | " | |
| TEMP. | | " | |
| PATT. | | " | |

**TITLE:** 25 CYCLE "60-88" H.T. TRANSFORMER STUD

H. G. FISCHER & CO.
2335 WABANSIA AVE.
CHICAGO, ILL.

CAT. NO.

PART NO. 8356 1/2

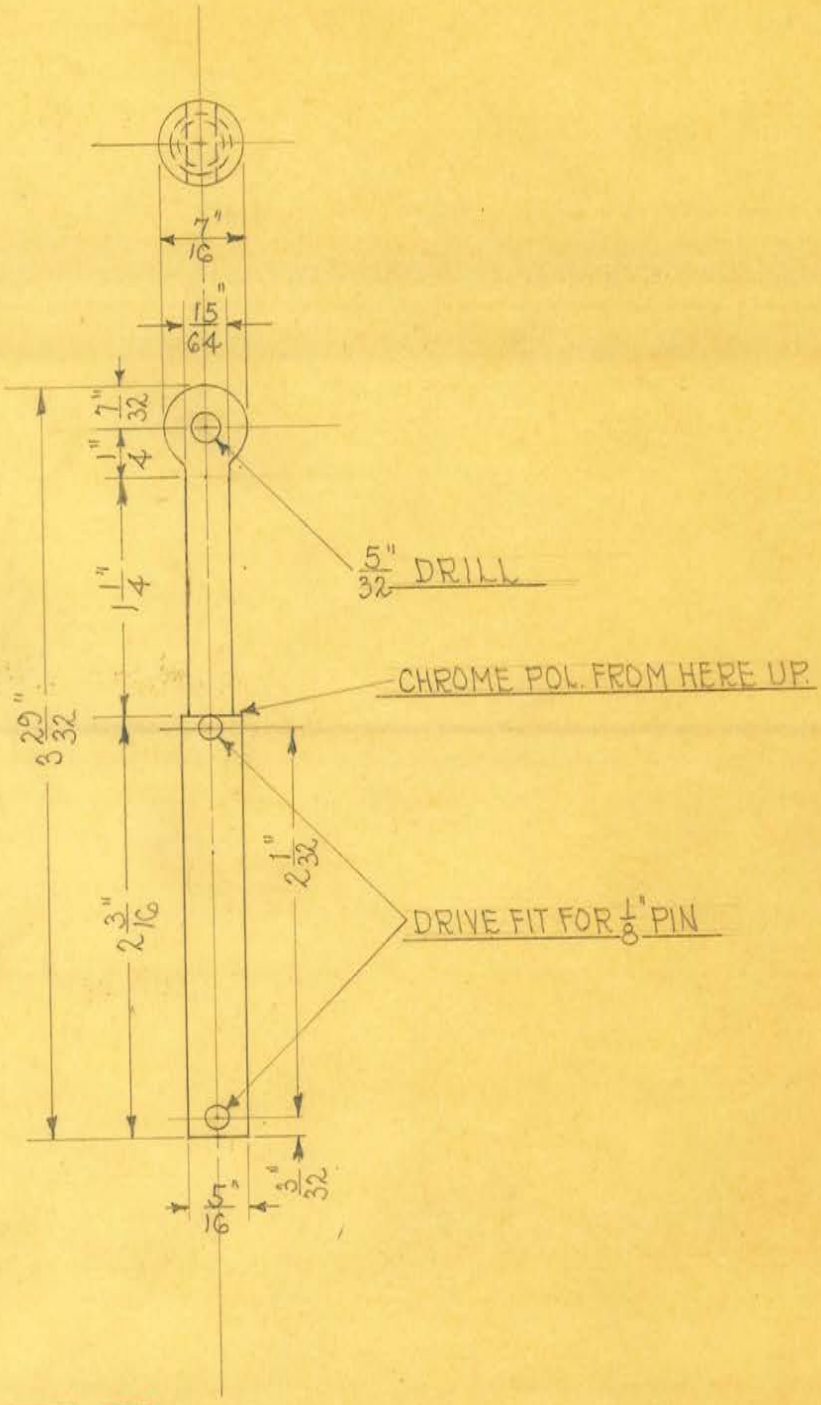


1 REQUIRED

OBSOLETE

| | | | | |
|---|---|---|---|---|
| SIZE | 7/16" | ISSUE 6-28-33 | J.E. | TITLE: UNIVERSAL "GO-88" TUBE STAND TUBE & SCREEN LATERAL COUPLING FIXED TUBE HEAD LOCK PIECE |
| KIND | C.R. STEEL | CHANGED | | |
| SHAPE | | " " | | |
| FINISH | | " " | | |
| TEMP. | | " " | | H. G. FISCHER & CO. 2335 WABANSIA AVE. CHICAGO, ILL. — CAT. NO. — PART NO. 8275 |
| PATT. | | " " | | |

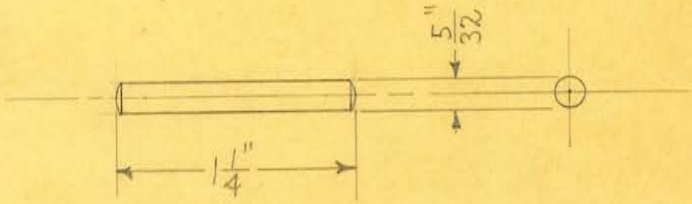


1 REQUIRED

OBSOLETE

| | | | | |
|---|---|---|---|---|
| SIZE | 5/32" ROD | ISSUE 6-28-33 | H.E. | TITLE: UNIVERSAL "60-88" TUBE STAND TUBE & SCREEN LAT. COUPLING, FIXED TUBE HEAD LOCK PIECE HANDLE PIN |
| KIND | C.R. STEEL | CHANGED | | |
| SHAPE | | " " | | |
| FINISH | | " " | | |
| TEMP. | | " " | | H. G. FISCHER & CO. 2335 WABANSIA AVE. CHICAGO, ILL. — CAT. NO. — PART NO. 8276 |
| PATT. | | " " | | |

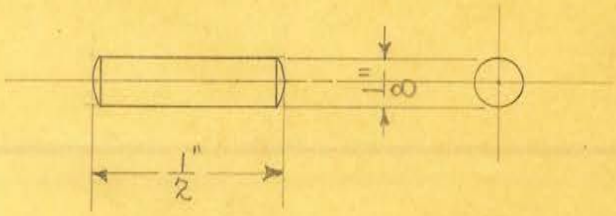


2 REQUIRED - CHROME POL. 1 ONLY

SCALE ~ DOUBLE SIZE

OBSOLETE

| | | | | |
|---|---|---|---|---|
| SIZE | 1/8" ROD | ISSUE 6-28-33 | A.E. | TITLE: UNIVERSAL "60-88" TUBE STAND TUBE & SCREEN LAT. COUPLING, FIXED TUBE HEAD LOCK PIECE STOP PIN |
| KIND | C.R. STEEL | CHANGED | | |
| SHAPE | | " " | | |
| FINISH | SEE ABOVE | " " | | |
| TEMP. | | " " | | |
| PATT. | | " " | | |

H. G. FISCHER & CO.
2335 WABANSIA AVE.
CHICAGO, ILL.

CAT. NO.

PART NO. 8277

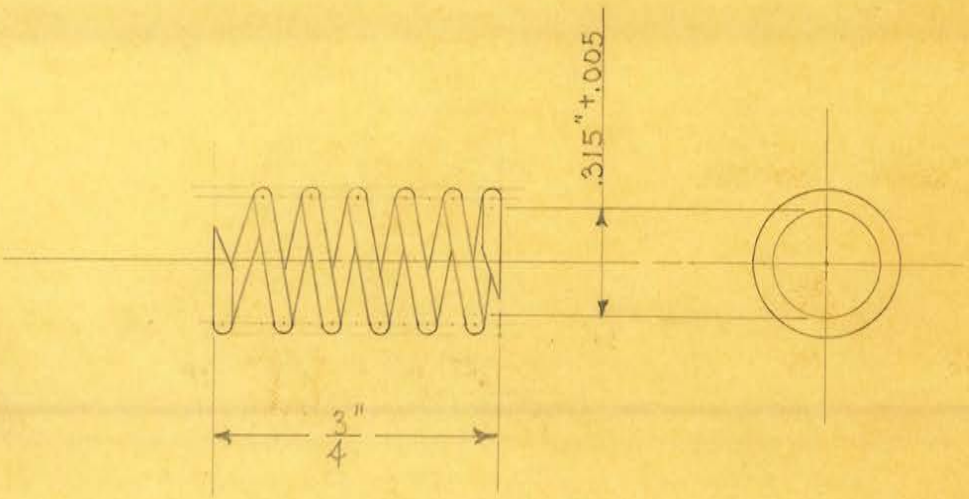


1 REQUIRED

SCALE ~ DOUBLE SIZE

6 TURNS OF .040" PIANO WIRE WOUND ON 9/32" ROD

OBSOLETE

| | | | | |
|---|---|---|---|---|
| SIZE | | ISSUE 6-28-33 | J.E. | TITLE: UNIVERSAL "GO-88" TUBE STAND TUBE & SCREEN LAT. COUPLING FIXED TUBE HEAD LOCK PIECE SPG. |
| KIND | | CHANGED | | |
| SHAPE | | " " | | |
| FINISH | | " " | | |
| TEMP. | | " " | | H. G. FISCHER & CO. 2335 WABANSIA AVE. CHICAGO, ILL. / CAT. NO. / PART NO. 8279 |
| PATT. | | " " | | |

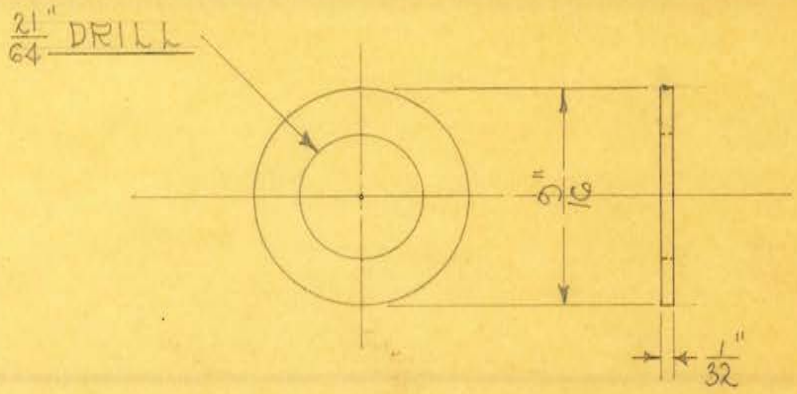


1 REQUIRED

SCALE ~ 2 DIAMETERS

OBSOLETE

| | | | | |
|---|---|---|---|---|
| SIZE | | ISSUE 6-28-33 | J.E. | TITLE: UNIVERSAL "GO-88" TUBE STAND TUBE & SCREEN LAT. COUPLING FIXED TUBE HEAD LOCK PIECE SPG. WASHER |
| KIND | C.R. STEEL | CHANGED | | |
| SHAPE | | " " | | |
| FINISH | | " " | | |
| TEMP. | | " " | | H. G. FISCHER & CO. 2335 WABANSIA AVE. CHICAGO, ILL. — CAT. NO. — PART NO. 8280 |
| PATT. | | " " | | |

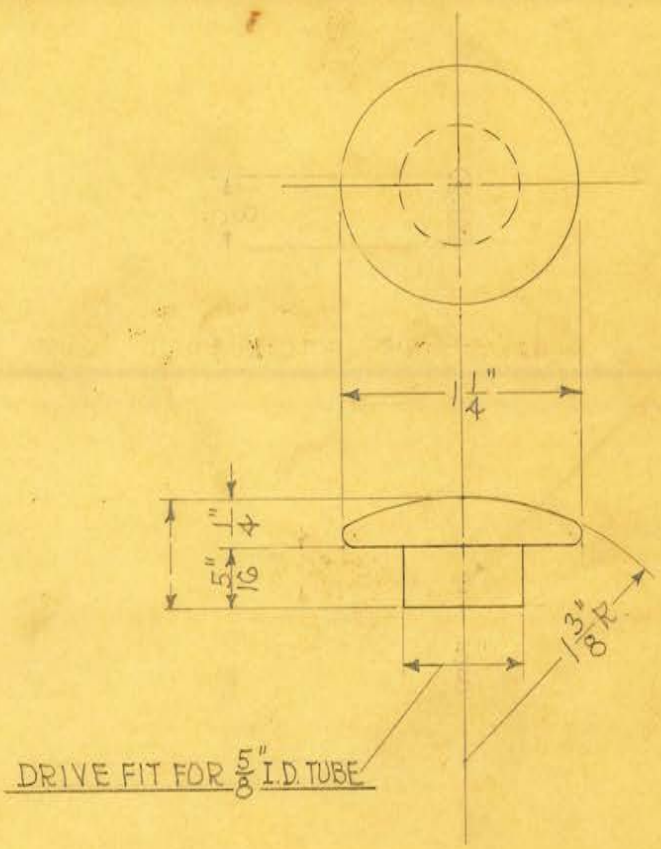


1 REQUIRED

OBSOLETE

| | | | | |
|---|---|---|---|---|
| SIZE | 1¼" | ISSUE 7-6-33 | A.E. | TITLE: UNIVERSAL "60-88" TUBE STAND TUBE & SCREEN LATERAL COUPLING FIXED TUBE CAP |
| KIND | ALUM. ROD | CHANGED | | |
| SHAPE | | " " | | |
| FINISH | POL. & BUFF | " " | | |
| TEMP. | | " " | | H. G. FISCHER & CO. 2335 WABANSIA AVE. CHICAGO, ILL. — CAT. NO. — PART NO. 8281 |
| PATT. | | " " | | |

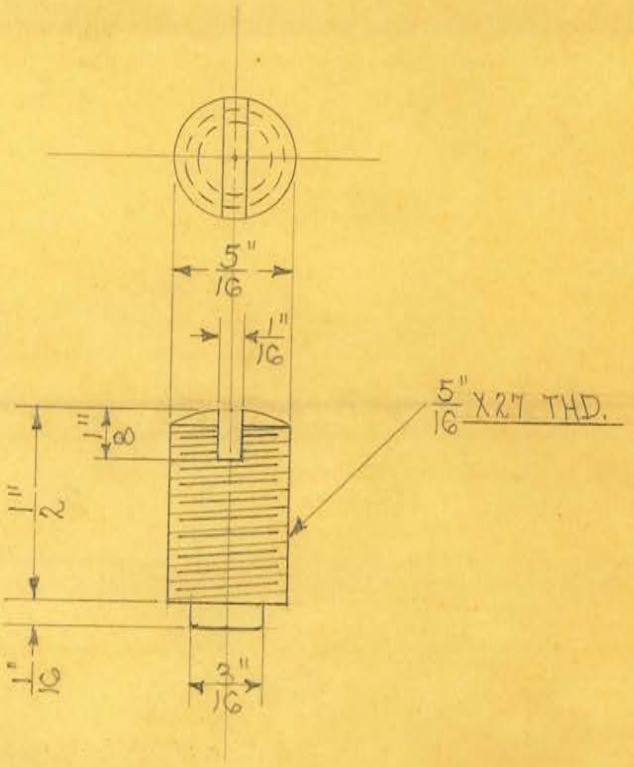


SCALE ÷ 2 DIAMETERS

1 REQUIRED

OBSOLETE

| | | | | |
|---|---|---|---|---|
| SIZE | 5/16" | ISSUE 6-6-33 | J.E. | TITLE: UNIVERSAL "60-88" TUBE STAND HORIZ. TUBE OPERATING BRACKET - SET SCREW |
| KIND | C.R. STEEL | CHANGED | | |
| SHAPE | | " " | | |
| FINISH | CHROME POL. HEAD | " " | | |
| TEMP. | | " " | | H. G. FISCHER & CO. 2335 WABANSIA AVE. CHICAGO, ILL. |
| PATT. | | " " | | CAT. NO. |
| | | | | PART NO. 8283 |

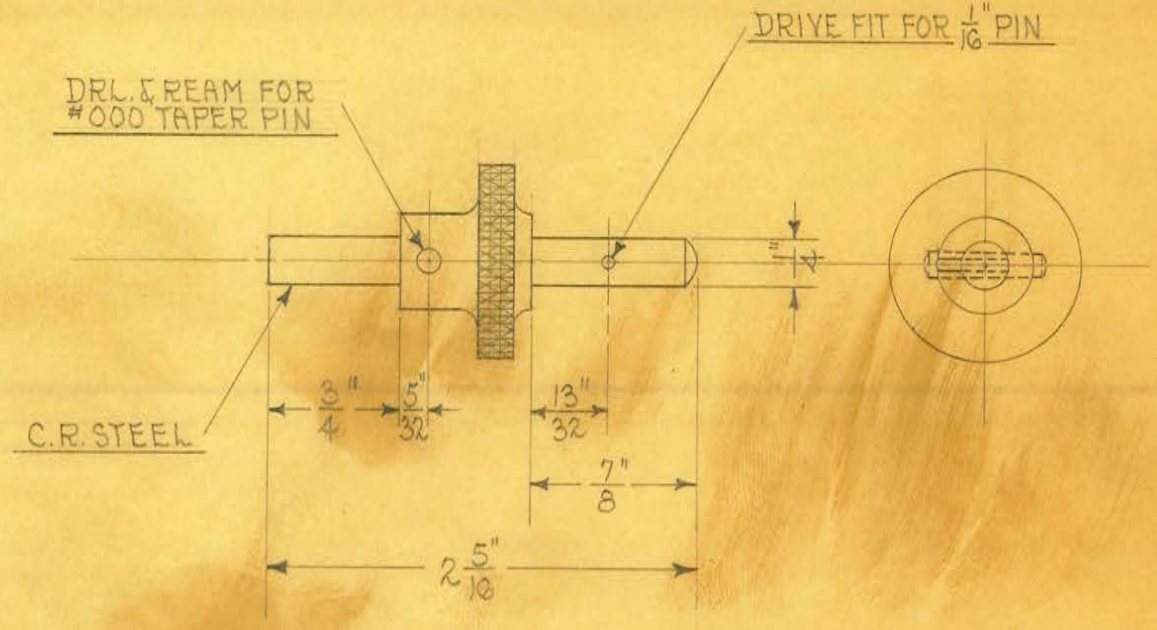


1 REQUIRED

OBSOLETE

| | | | | | |
|---|---|---|---|---|---|
| SIZE | | ISSUE 5-11-33 | A.E. | TITLE: UNIVERSAL "GO-88" TUBE STAND TUBE & SCREEN UPRIGHT SLIDE LOCK ASSEM. | |
| KIND | | CHANGED | | | |
| SHAPE | | " " | | | |
| FINISH | | " " | | | |
| TEMP. | | " " | | H. G. FISCHER & CO. 2335 WABANSIA AVE. CHICAGO, ILL. | CAT. NO. |
| PATT. | | " " | | | PART NO. 8284G |

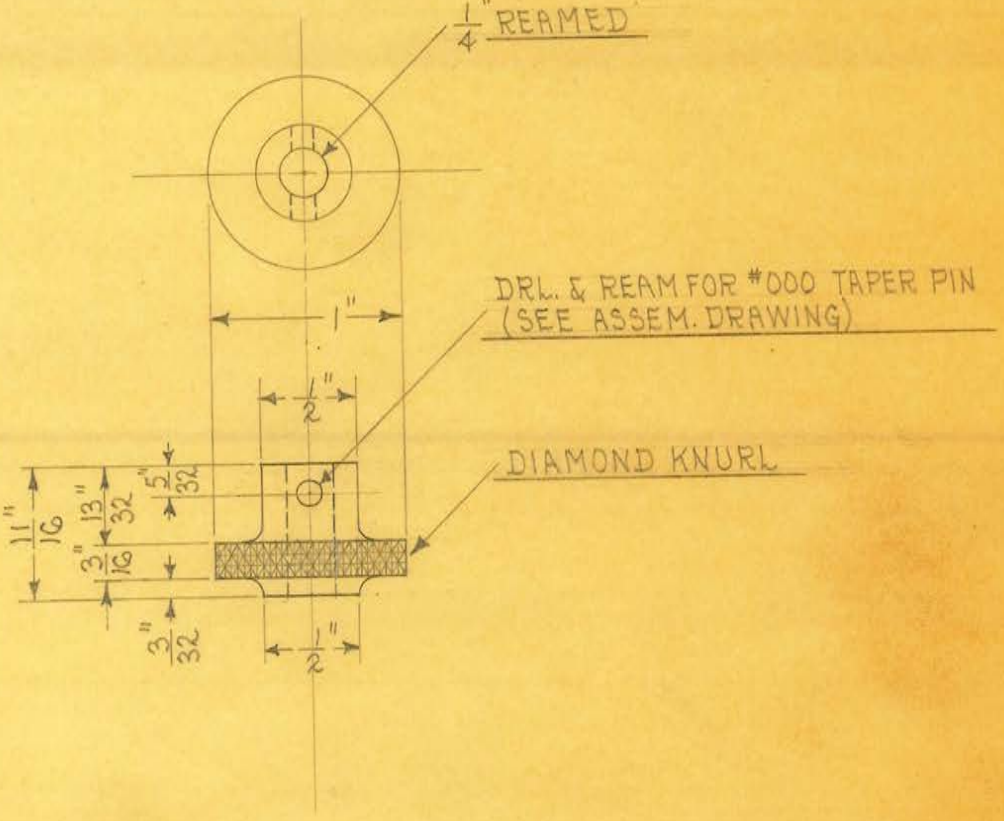


1 REQUIRED

OBSOLETE

| | | | | |
|---|---|---|---|---|
| SIZE | 1" | ISSUE 5-11-33 | A.E. | TITLE: UNIVERSAL "GO-88" TUBE STAND TUBE & SCREEN UPRIGHT SLIDE LOCK THUMB PIECE |
| KIND | BRASS ROD | CHANGED | | |
| SHAPE | | " " | | |
| FINISH | CHROME PDL. | " " | | |
| TEMP. | | " " | | H. G. FISCHER & CO. 2335 WABANSIA AVE. CHICAGO, ILL. — CAT. NO. — PART NO. 8285 |
| PATT. | | " " | | |

NOTE:
DRILL WITH Pc. # 8285

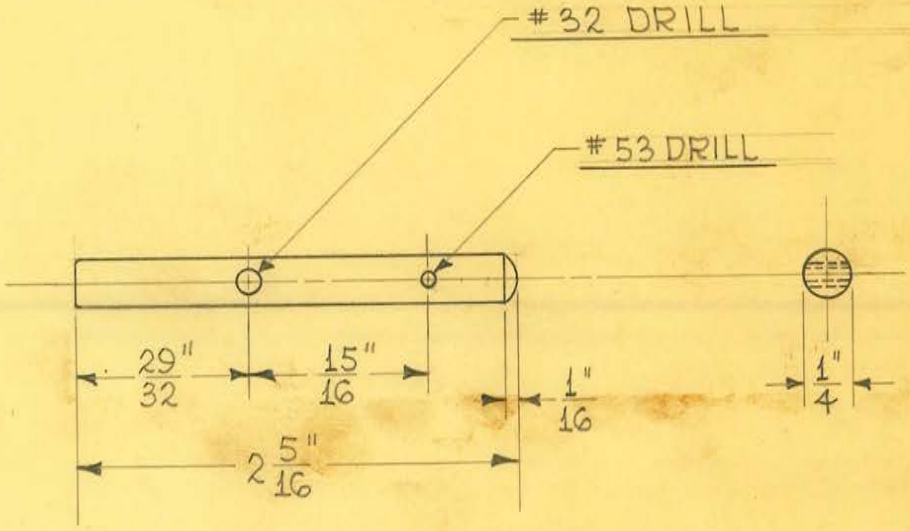


1 REQUIRED

OBSOLETE

| | | | |
|---|---|---|---|
| SIZE | 1/4" DIAM. | ISSUE 4-27-45 | HE. |
| KIND | C.R. STEEL | CHANGED | |
| SHAPE | ROD | " | |
| FINISH | CHROME #2 | " | |
| TEMP. | | " | |
| DATE | | " | |

**TITLE:** UNIVERSAL "60-88" TUBE STAND - TUBE & SCREEN UPRIGHT SLIDE LOCK SHAFT.

H. G. FISCHER & CO.
2338 WABANSIA AVE.
CHICAGO, ILL.

CAT. NO.

PART NO. 8286

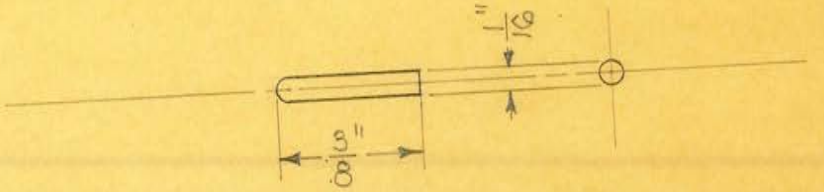


SCALE ~ 2 DIAMETERS

1 REQUIRED

OBSOLETE

| | | | |
|---|---|---|---|
| SIZE | 1/16" | ISSUE 5-11-33 | A.E. |
| KIND | DRILL ROD | CHANGED | |
| SHAPE | | " " | |
| FINISH | CHROME POL. | " " | |
| TEMP. | | " " | |
| PATT. | | " " | |

**TITLE:** UNIVERSAL "60-88" TUBE STAND TUBE & SCREEN
UPRIGHT SLIDE LOCK - LOCK PIN

H. G. FISCHER & CO.
2335 WABANSIA AVE.
CHICAGO, ILL.

CAT. NO.

PART NO. 8287

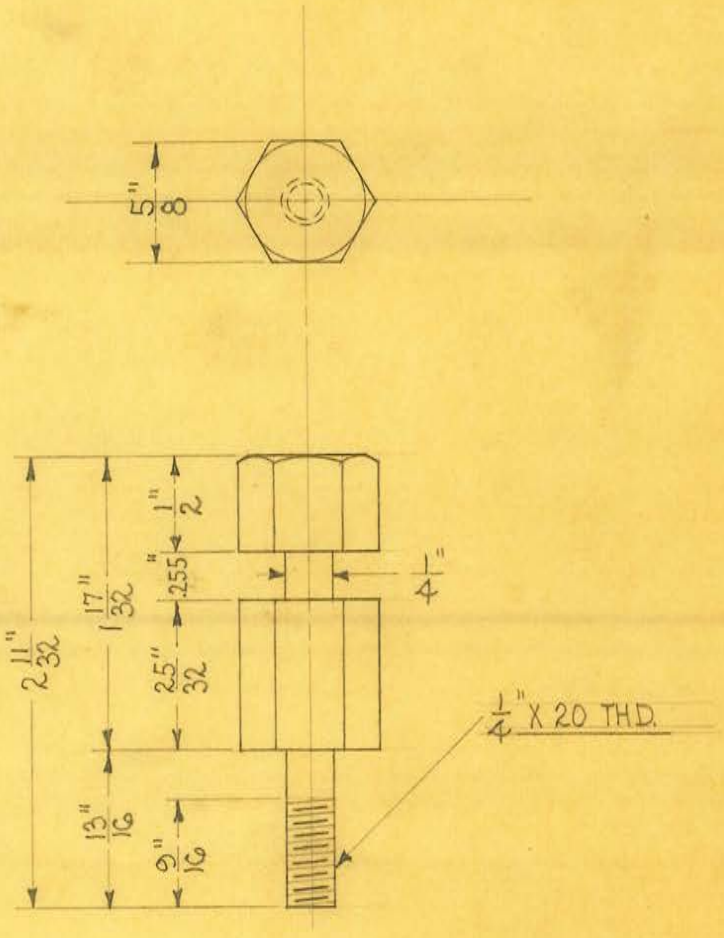


1 REQUIRED

OBSOLETE

| | | | |
|---|---|---|---|
| SIZE | 5/8" HEX. | ISSUE 11-16-33 | A.E. |
| KIND | C.R. STEEL | CHANGED | |
| SHAPE | | " | |
| FINISH | CHROME POL. | " | |
| TEMP. | | " | |
| PATT. | | " | |

**TITLE:** UNIVERSAL "60-88" TUBE STAND TUBE & SCREEN
UPRIGHT SLIDE LOCK STUD

H. G. FISCHER & CO.
2335 WABANSIA AVE.
CHICAGO, ILL.

CAT. NO.

PART NO. 8288

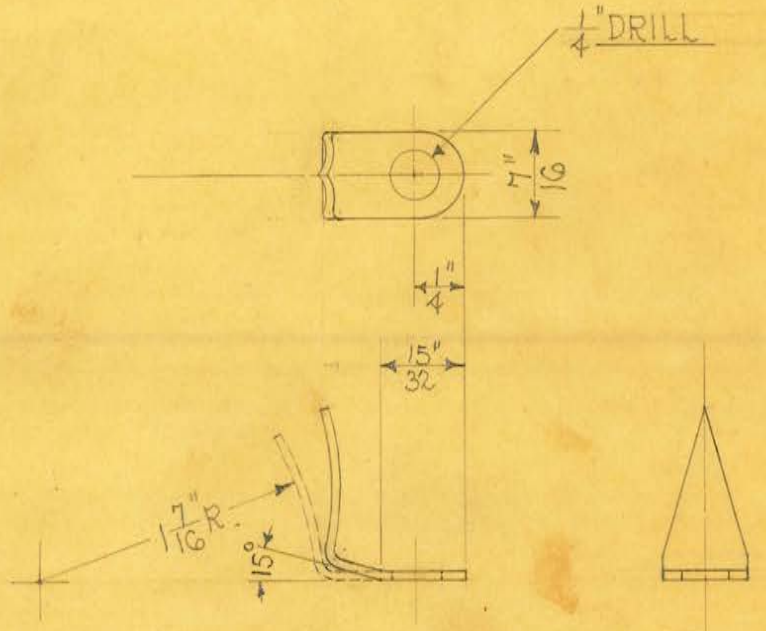


1 REQUIRED
DEVELOPED LENGTH - 1½"

OBSOLETE

| | | | | | |
|---|---|---|---|---|---|
| SIZE | .040" SHEET | ISSUE 6-15-33 | A.E. | TITLE: UNIVERSAL "GO-88" TUBE STAND VERTICAL SCALE INDICATOR | |
| KIND | BRASS | CHANGED | | | |
| SHAPE | | " " | | | |
| FINISH | CHROME PDL. | " " | | | |
| TEMP. | | " " | | H. G. FISCHER & CO. 2335 WABANSIA AVE. CHICAGO, ILL. | CAT. NO. |
| PATT. | | " " | | | PART NO. 8290F |

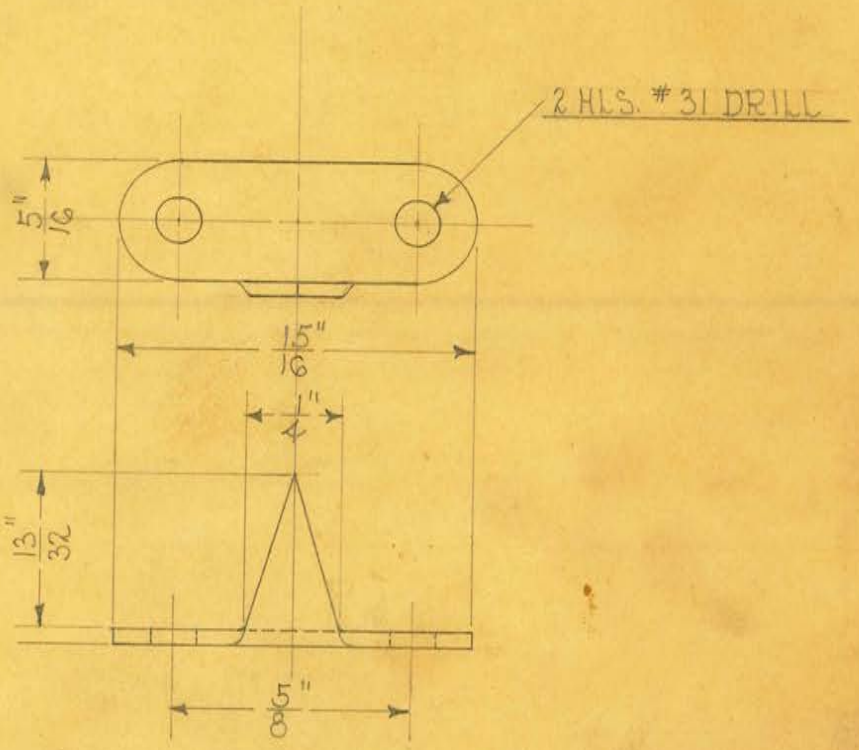


1 REQUIRED

SCALE ≈ DOUBLE SIZE

OBSOLETE

44 SEE NEW TRACING

12-27-51

| | | | | | | |
|---|---|---|---|---|---|---|
| SIZE | .040" SHEET | ISSUE 6-15-33 | A.E. | TITLE: UNIVERSAL "60-88" TUBE STAND HORIZONTAL SCALE INDICATOR | | |
| KIND | BRASS | CHANGED | | | | |
| SHAPE | | " " | | | | |
| FINISH | CHROME POL. | " " | | | | |
| TEMP. | | " " | | H. G. FISCHER & CO. 2335 WABANSIA AVE. CHICAGO, ILL. | CAT. NO. | PART NO. 8292 |
| PATT. | | " " | | | | |

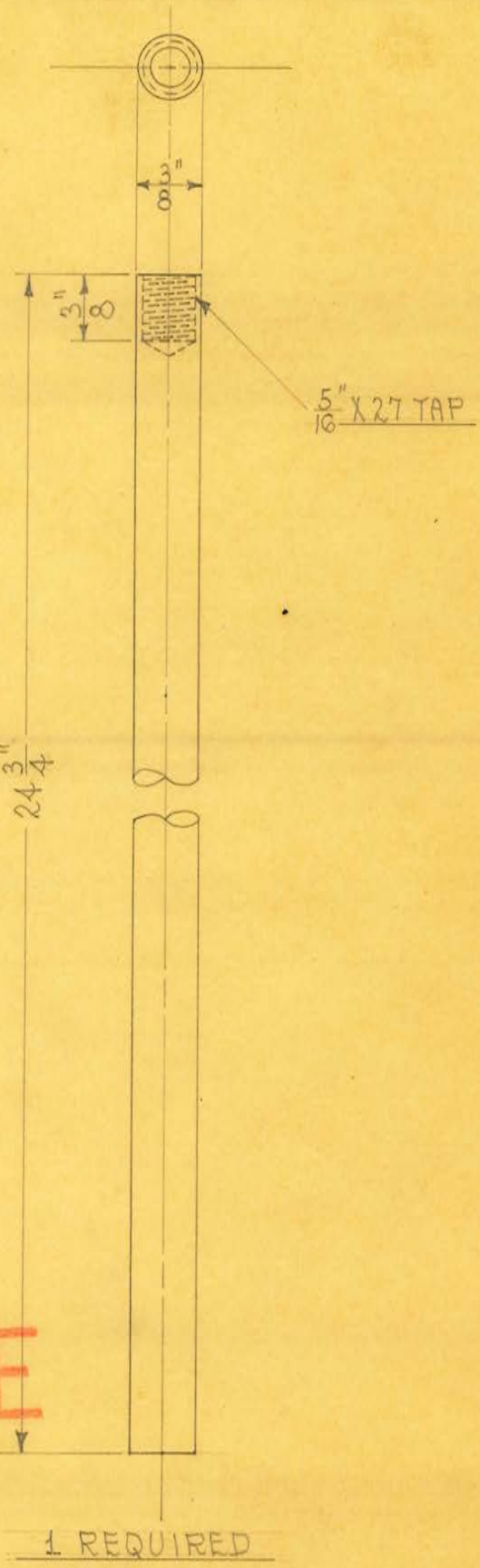


1 REQUIRED

OBSOLETE

| | | | | |
|---|---|---|---|---|
| SIZE | 3/8" ROD | ISSUE 6-23-33 | A.E. | **TITLE:** UNIVERSAL "60-88" TUBE STAND STOP ROD (LONG) |
| KIND | C.R. STEEL | CHANGED | | |
| SHAPE | | " " | | |
| FINISH | CHROME POL. | " " | | |
| TEMP. | | " " | | H. G. FISCHER & CO. 2335 WABANSIA AVE. CHICAGO, ILL. — CAT. NO. — PART NO. 8293 |
| PATT. | | " " | | |

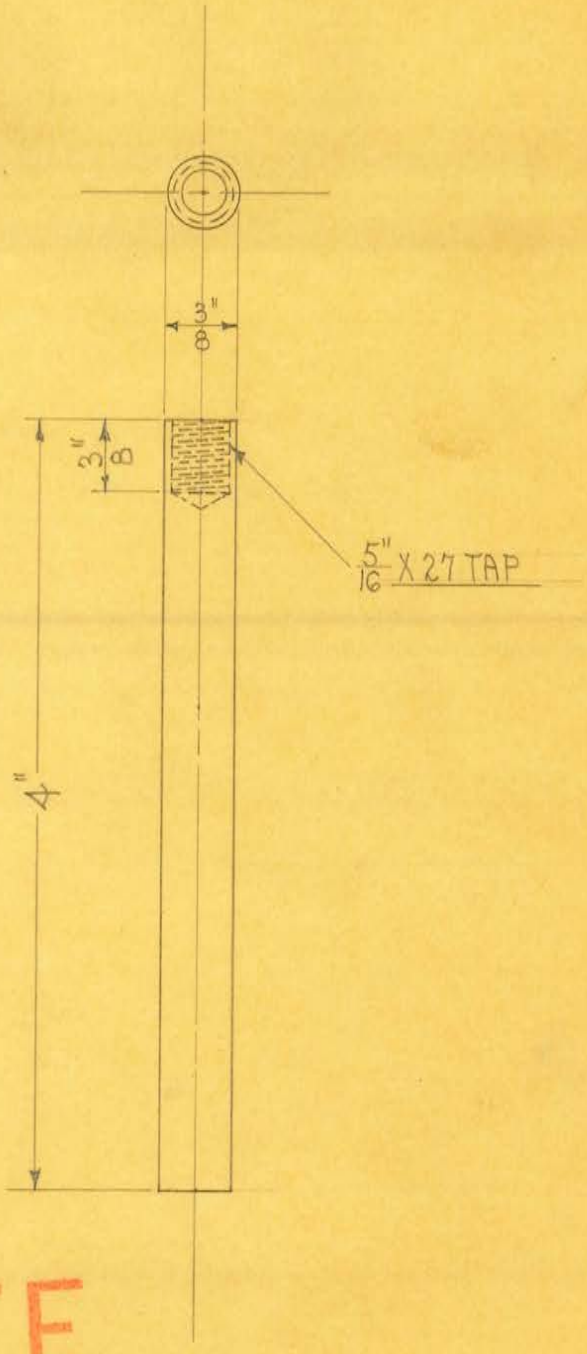


OBSOLETE

1 REQUIRED

| | | | |
|---|---|---|---|
| SIZE | 3/8" ROD | ISSUE 6-23-33 | J.F.E. |
| KIND | C.R. STEEL | CHANGED | |
| SHAPE | | " " | |
| FINISH | CHROME POL. | " " | |
| TEMP. | | " " | |
| PATT. | | " " | |

**TITLE:** UNIVERSAL "60-88" TUBE STAND STOP ROD (SHORT)

H. G. FISCHER & CO.
2335 WABANSIA AVE.
CHICAGO, ILL.

CAT. NO.

PART NO. 8294

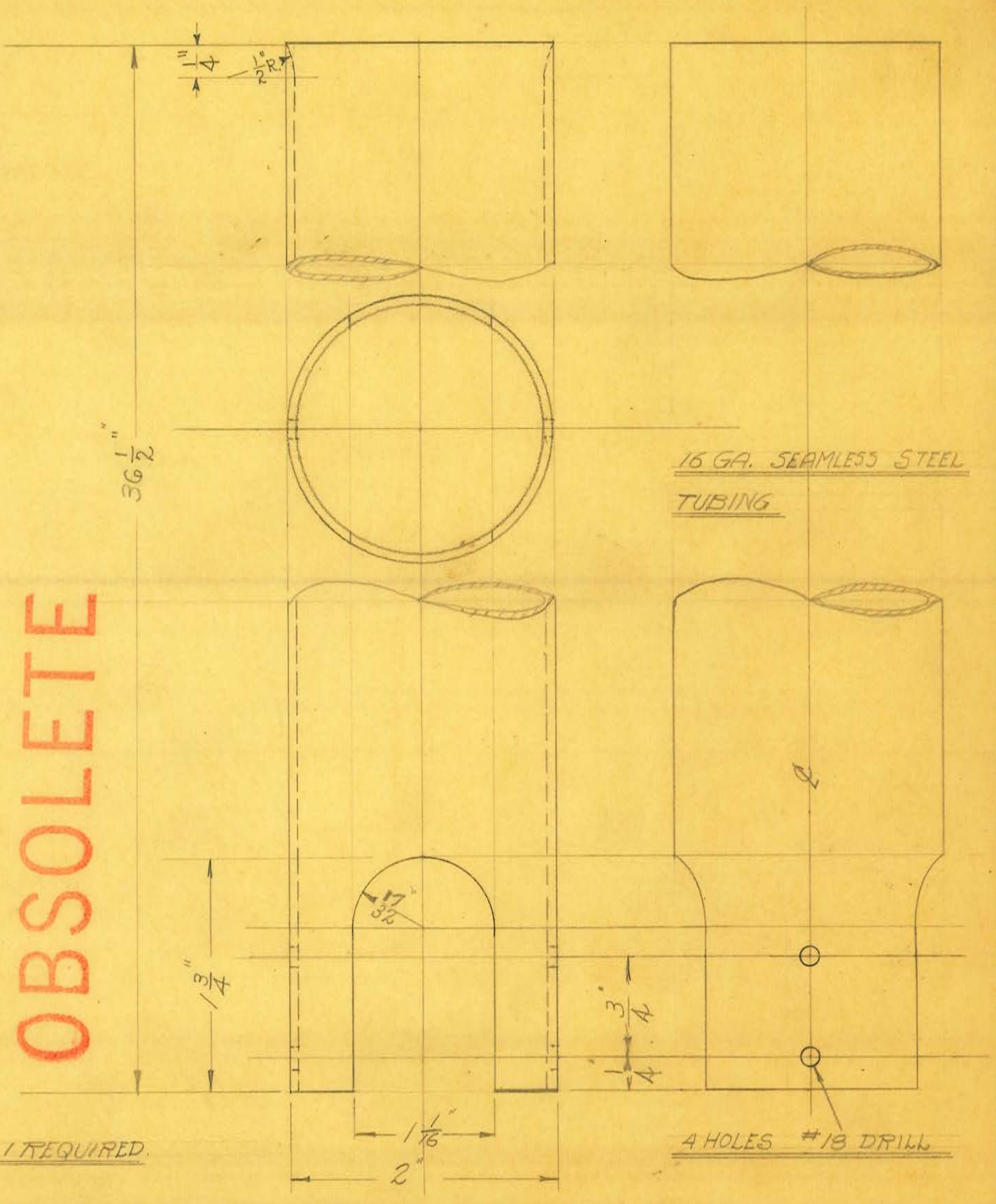


| | | | |
|---|---|---|---|
| SIZE | 2" OD. TUBE | ISSUE 10-30-33 | N.P. |
| KIND | SEAMLESS STEEL | CHANGED | |
| SHAPE | | " | |
| FINISH | | " | |
| TEMP. | | " | |
| PATT. | | " | |

**TITLE:** UNIVERSAL 60-88 TUBE STAND TUBE SIDE HORIZONTAL TUBE - INNER (FINISHED)

H. G. FISCHER & CO.
2335 WABANSIA AVE.
CHICAGO, ILL.

CAT. NO.

PART NO. 8295F

TITLE: BALL BEARING 1/4 - 1 1/16 x 1/4

**H. G. FISCHER & CO.**
FRANKLIN PARK, ILLINOIS

PART NO. 8299

| DATE | DR. BY | CH'K'D. |
|---|---|---|
| 3-31-69 | C.L.L. | L.J.B. |

| PATTERN | FINISH | SCALE |
|---|---|---|
| | 123 | ~ |

MATERIAL:

TOOLS:

DIMENSIONS—UNLESS OTHERWISE SPECIFIED:

| | | |
|---|---|---|
| FRACTIONAL | ± .015 | THREAD CHAMFER |
| DECIMAL | ± .005 | UP TO 5/16 D. - 1/32 X 45° |
| ANGULAR | ± 1/2° | 3/8 D. & OVER - 1/16 X 45° |

REMOVE ALL BURRS & SHARP CORNERS

| USED ON | QTY. | USED ON | QTY. |
|---|---|---|---|
| | | | |
| | | | |

| REVISION | DATE | BY |
|---|---|---|
| | | |

SPECS: $1\frac{1}{16}$" O.D. X $\frac{1}{4}$" I.D. X $\frac{1}{4}$" THK

SOURCE:
SCHATZ MFG CO.
456 W. FRONTAGE RD.
NORTHFIELD, ILL.

OBS
5-12-79
WPS
ECO 1704

DO NOT SCALE DRAWING.

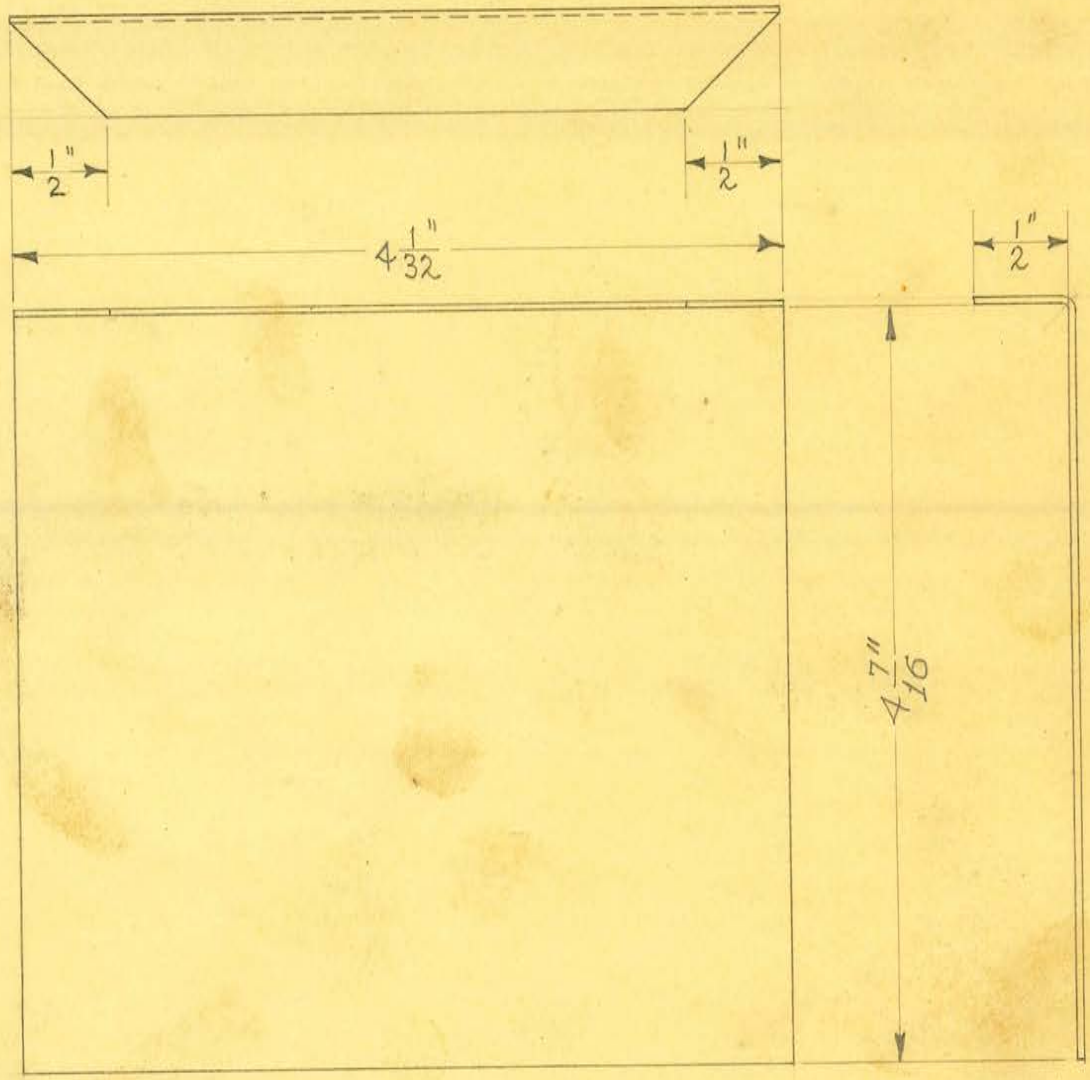


OBSOLETE

| | | | | |
|---|---|---|---|---|
| SIZE | 1 MM. SHEET | ISSUE 9-29-34 | A.E. | **TITLE:** UNIVERSAL "60-88" SQUARE ALUMINUM FILTER-WIDE |
| KIND | ALUMINUM | CHANGED 8-13-37 | J.W. | |
| SHAPE | | " | | |
| FINISH | SCRATCH BRUSH | " | | |
| TEMP. | | " | | |
| PATT. | | " | | |

H. G. FISCHER & CO.
2335 WABANSIA AVE.
CHICAGO, ILL

CAT. NO.

PART NO. 8302A

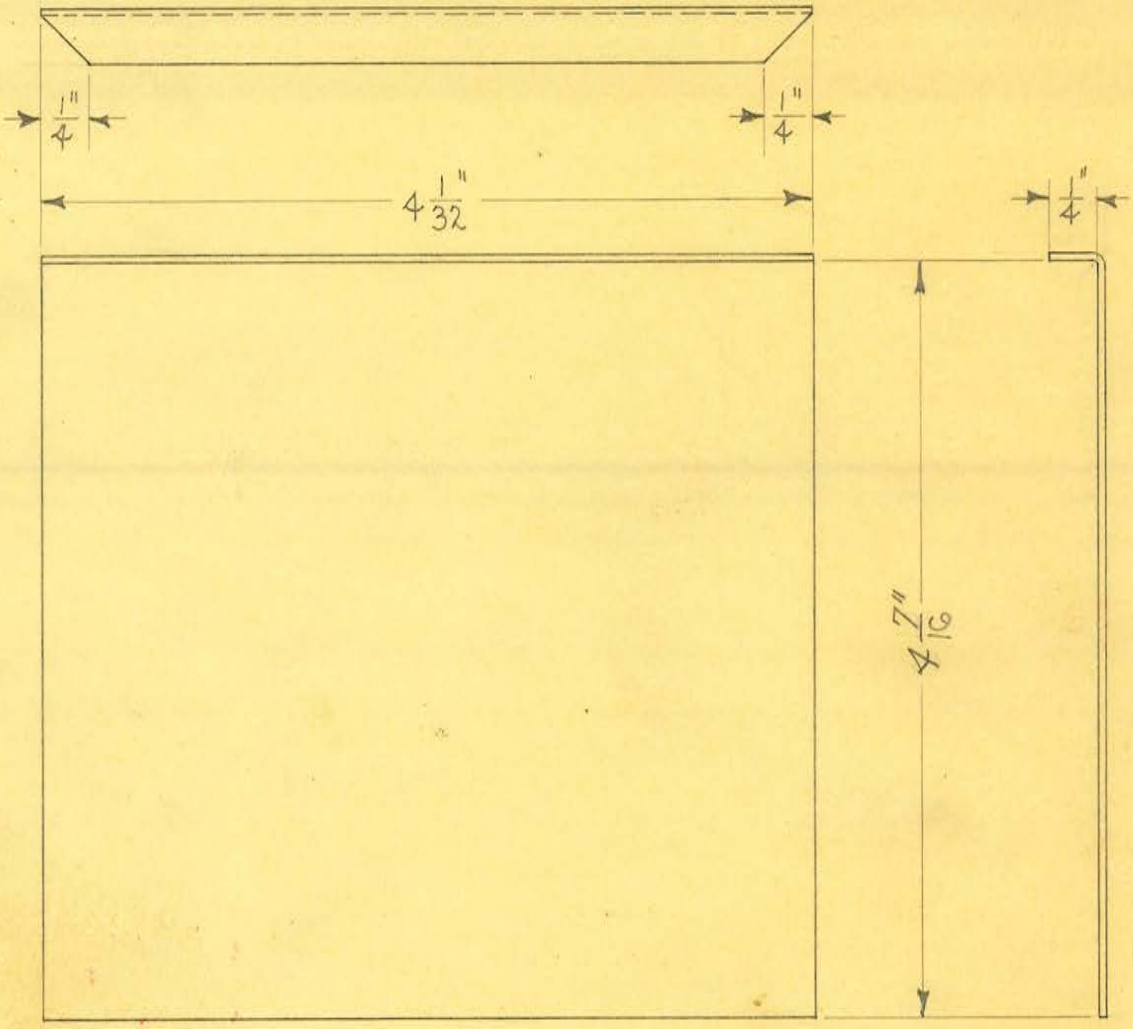


OBSOLETE

| | | | | |
|---|---|---|---|---|
| SIZE | 1MM. SHEET | ISSUE | | |
| KIND | ALUMINUM | CHANGED 8-13-37 | J.W. | |
| SHAPE | | " | | |
| FINISH | SCRATCH BRUSH | " | | |
| TEMP. | | " | | |
| PATT. | | " | | |

**TITLE:** UNIVERSAL "60-88" SQUARE ALUMINUM FILTER-NARROW

H. G. FISCHER & CO.
2335 WABANSIA AVE.
CHICAGO, ILL

CAT. NO.

PART NO. 8303A

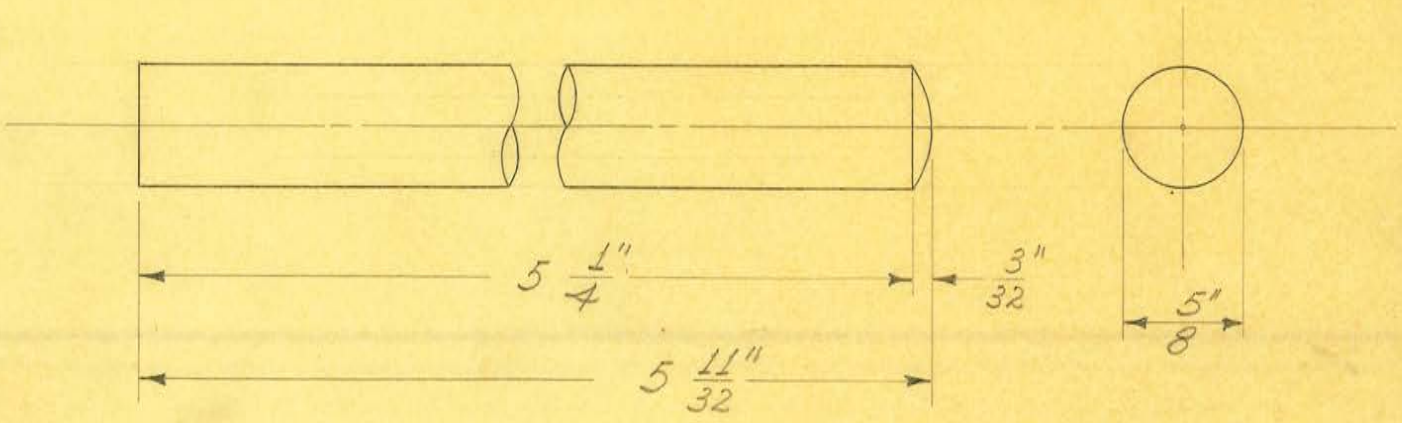


1 REQUIRED

OBSOLETE

| | | | | |
|---|---|---|---|---|
| SIZE | 5/8" DIAM. | ISSUE 10-5-37 | J.W. | TITLE: UNIV. "60-88" CONTROL BOX CENTER SUPPORT SHAFT |
| KIND | C.R. STEEL | CHANGED | | |
| SHAPE | ROD | " | | |
| FINISH | | " | | |
| TEMP. | | " | | |
| PATT. | | " | | |

H. G. FISCHER & CO.
2335 WABANSIA AVE.
CHICAGO, ILL.

CAT. NO.

PART NO. 8306 1/2

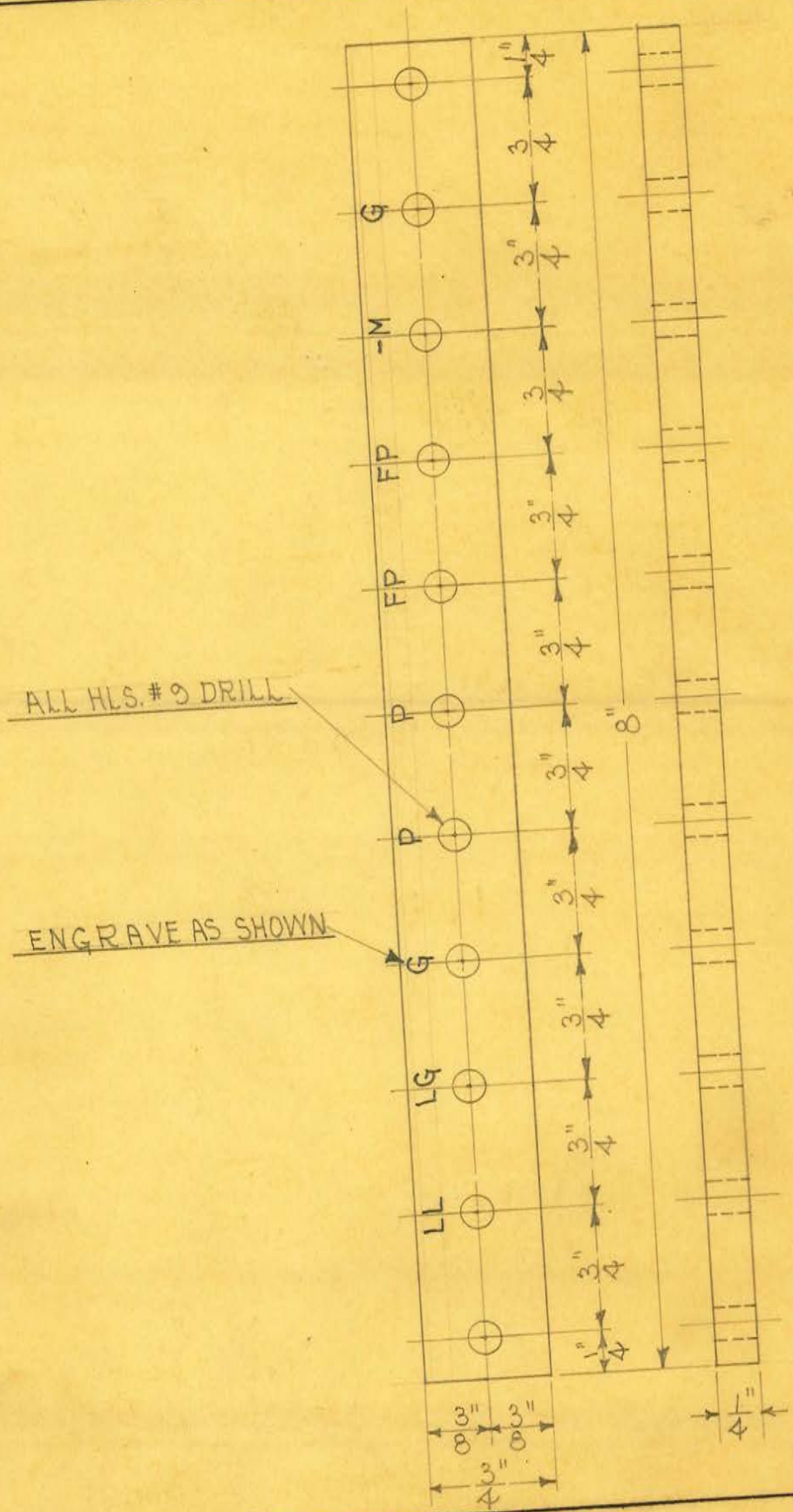


OBSOLETE

1 REQUIRED

| | | | |
|---|---|---|---|
| SIZE | ¼" (RICHELAIN) | ISSUE 6-20-33 | A.E. |
| KIND | BAKELITE | CHANGED | |
| SHAPE | | " " | |
| FINISH | | " " | |
| TEMP. | | " " | |
| | | " " | |

**TITLE:** UNIVERSAL "60-88" CONTROL BOX TERM. STRIP

H. G. FISCHER & CO.
2335 WABANSIA AVE.
CHICAGO, ILL.

CAT. NO.

PART NO. 8313

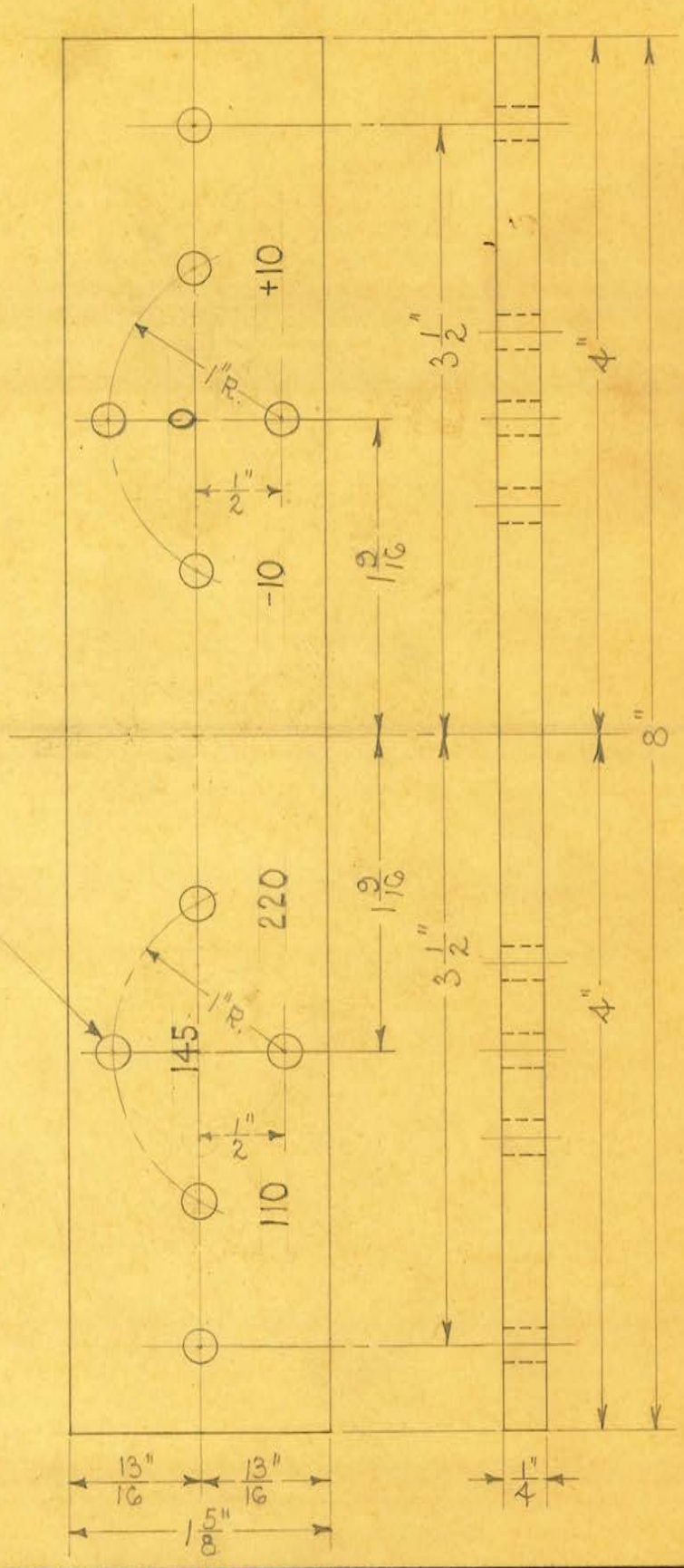


ALL HLS. #9 DRILL

1 REQUIRED

OBSOLETE

| | | | | |
|---|---|---|---|---|
| SIZE | 1/4" (RICHELAIN) | ISSUE 6-20-33 | A.E. | **TITLE:** UNIVERSAL "60-88" CONTROL BOX VOLTAGE TAP TERM. BLOCK |
| KIND | BAKELITE | CHANGED | | |
| SHAPE | | " " | | |
| FINISH | | " " | | |
| TEMP. | | " " | | |
| PATT. | | " " | | |

H. G. FISCHER & CO.
2335 WABANSIA AVE.
CHICAGO, ILL.

CAT. NO.

PART NO. 8315

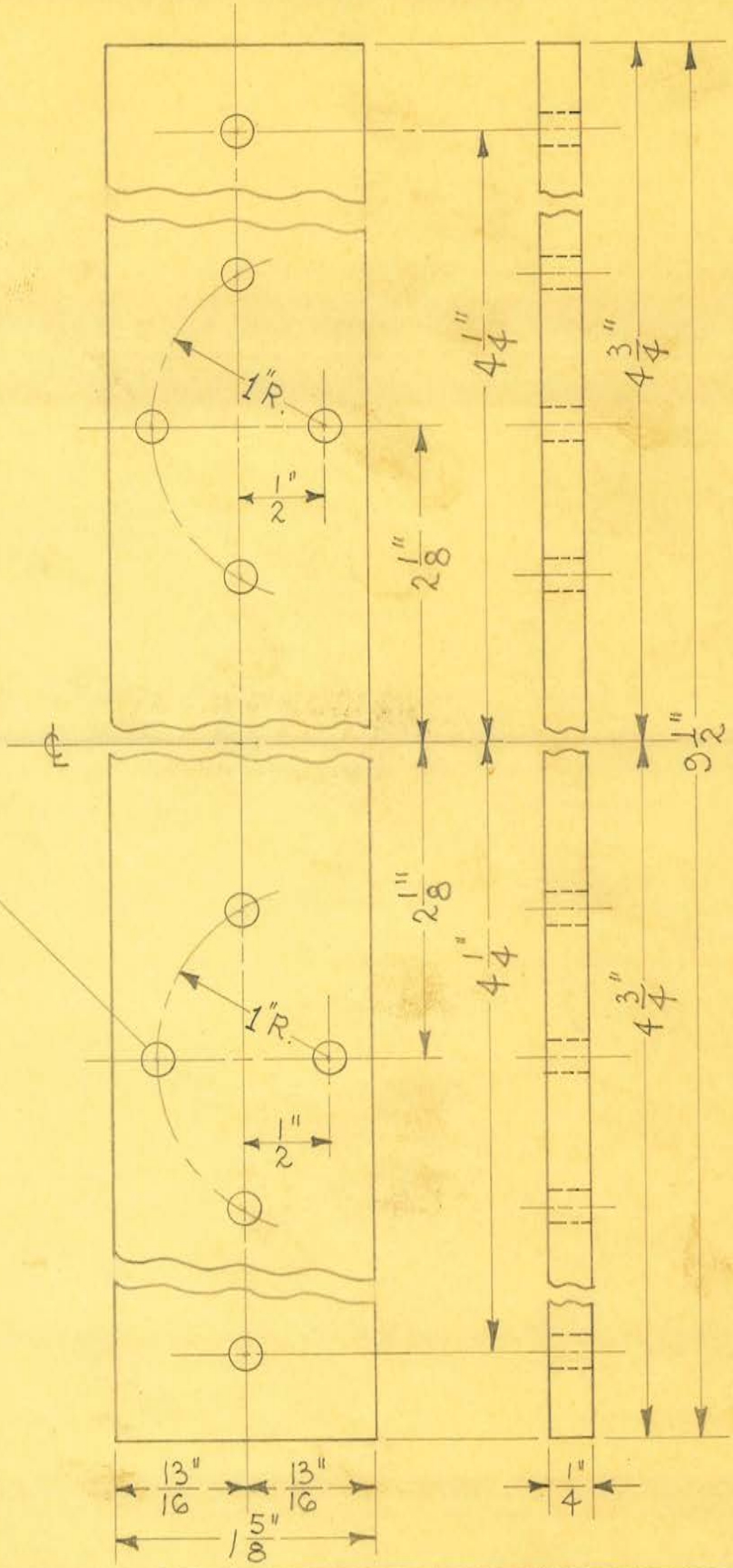


OBSOLETE

1 REQUIRED

| | | | |
|---|---|---|---|
| SIZE | 1/4" (RICHELAIN) | ISSUE 10-12-36 | J.F.G. |
| KIND | BAKELITE | CHANGED | |
| SHAPE | | " | |
| FINISH | | " | |
| TEMP. | | " | |
| PATT. | | " | |

**TITLE:**
25 CYCLE UNIVERSAL "GO-88" CONTROL BOX
VOLTAGE TAP TERM. BLOCK

H. G. FISCHER & CO.
2335 WABANSIA AVE.
CHICAGO, ILL.

CAT. NO.

PART NO. 8315 1/2

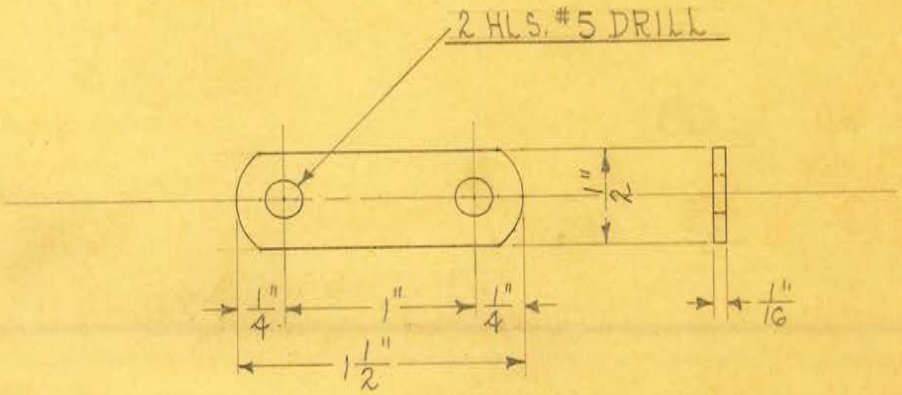


2 REQUIRED

OBSOLETE Obsolete

| | | | | |
|---|---|---|---|---|
| SIZE | 1/16" X 1/2" | ISSUE 7-6-33 | 24.6 | TITLE: UNIVERSAL "60-88" CONTROL BOX VOLTAGE TAP TERM. BLOCK CONN. LINK |
| KIND | STRIP BRASS | CHANGED | | |
| SHAPE | | " " | | |
| FINISH | | " " | | |
| TEMP. | | " " | | |
| PATT. | | " " | | |

H. G. FISCHER & CO.
2335 WABANSIA AVE.
CHICAGO, ILL.

CAT. NO.

PART NO. 8316

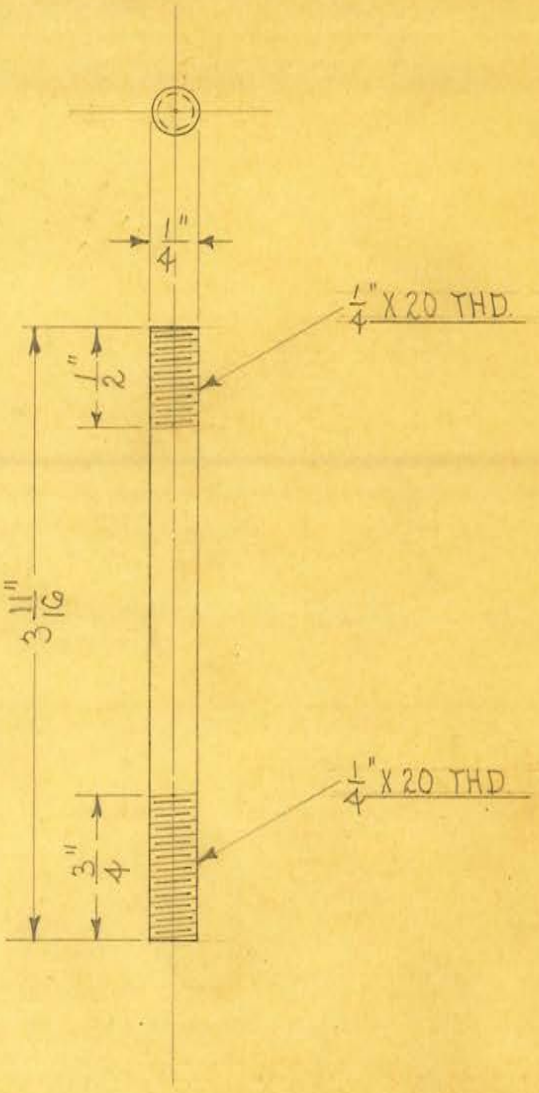


4 REQUIRED

OBSOLETE

| | | | | |
|---|---|---|---|---|
| SIZE | 1/4" | ISSUE 6-20-33 | H.E. | TITLE: UNIVERSAL "GO-88" CONTROL BOX AUTO CONTROL MOUNTING STUD |
| KIND | C.R. STEEL | CHANGED 5-21-34 | H.E. | |
| SHAPE | | " " | | |
| FINISH | | " " | | |
| TEMP. | | " " | | H. G. FISCHER & CO. 2335 WABANSIA AVE. CHICAGO, ILL. — CAT. NO. — PART NO. 8318A |
| PATT. | | " " | | |

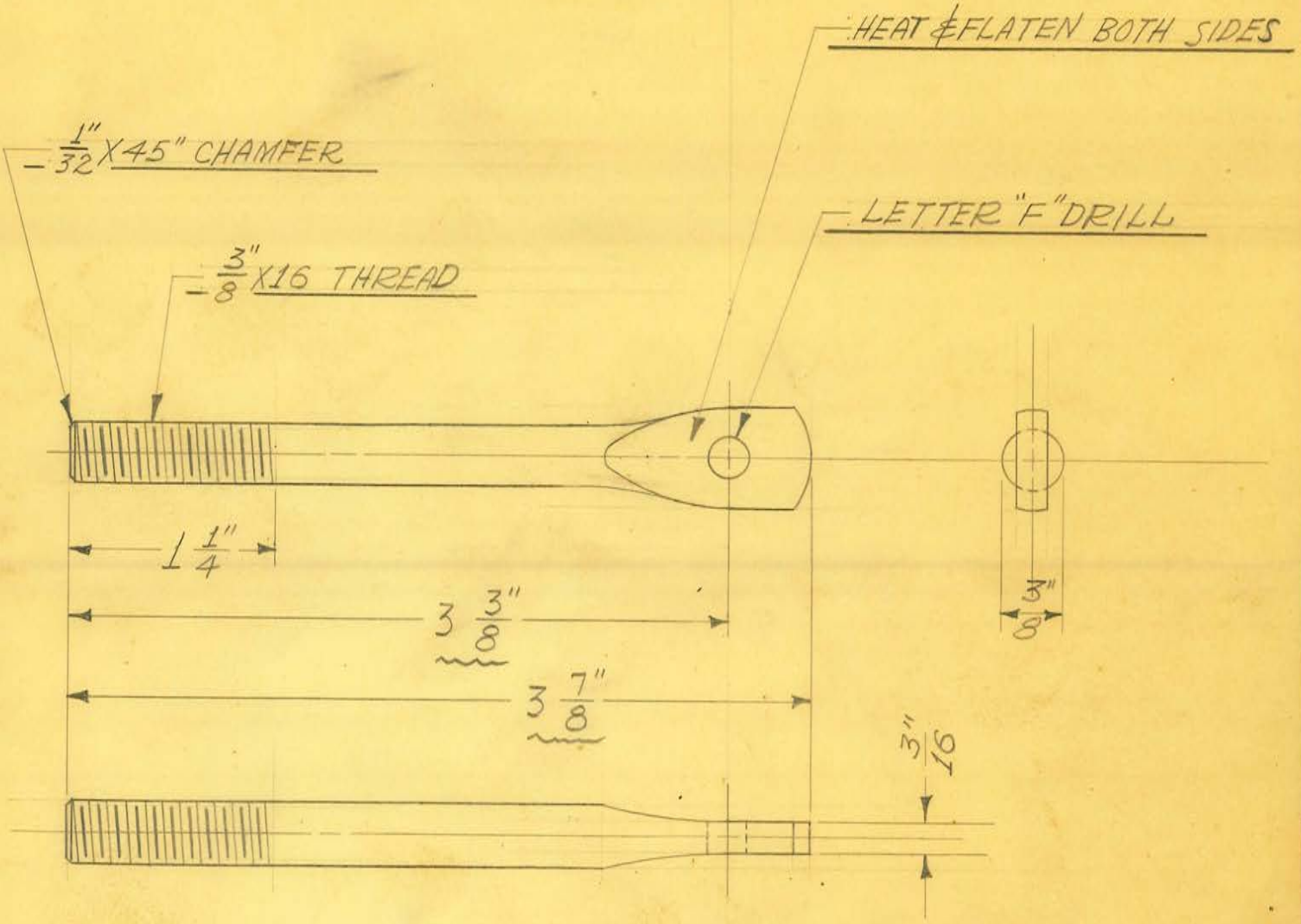


2 REQUIRED

OBSOLETE

Obsolete

| | | | |
|---|---|---|---|
| SIZE | 3/8" DIA. | ISSUE 1-2-41 | J.V.W. |
| KIND | C.R. STEEL | CHANGED | |
| SHAPE | | " | |
| FINISH | | " | |
| TEMP. | | " | |
| PATT. | | " | |

**TITLE:**
U.S.A. SHOCKPROOF DENTAL X-RAY UNIT
COUNTERWEIGHT CLAMP STUD

H. G. FISCHER & CO.
2335 WABANSIA AVE.
CHICAGO, ILL.

CAT. NO.

PART NO. 13698

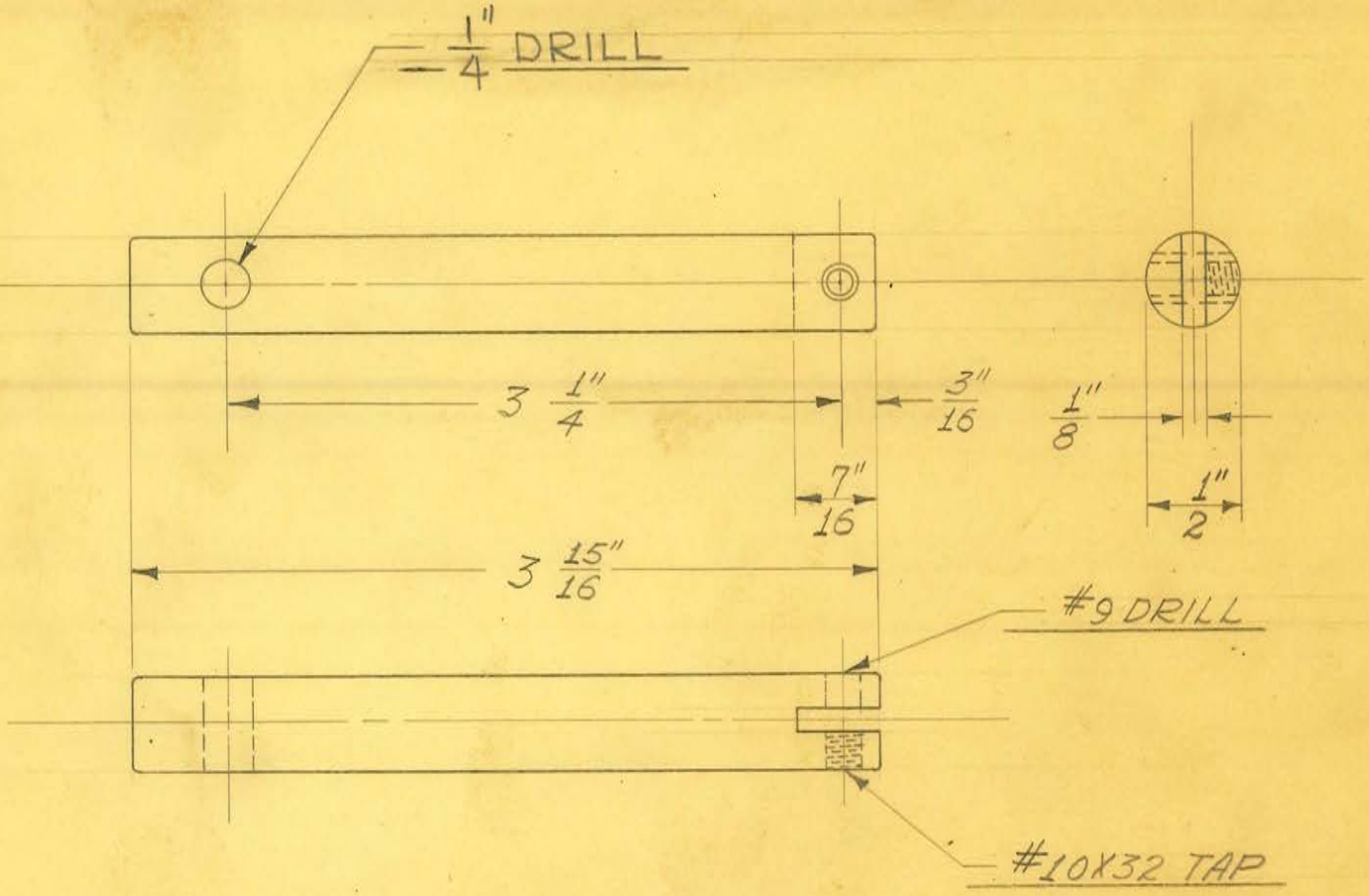


OBSOLETE

2 REQUIRED

Obsolete

| | | | |
|---|---|---|---|
| SIZE | 1/2" DIA. | ISSUE 1-2-41 | J.V.W. |
| KIND | C.R. STEEL | CHANGED | |
| SHAPE | | " | |
| FINISH | | " | |
| TEMP. | | " | |
| PATT. | | " | |

**TITLE:** U.S.A. SHOCKPROOF DENTAL X-RAY UNIT
COUNTERWEIGHT CHAIN SCREW LUG

H. G. FISCHER & CO.
2335 WABANSIA AVE.
CHICAGO, ILL.

CAT. NO.

PART NO. 13699

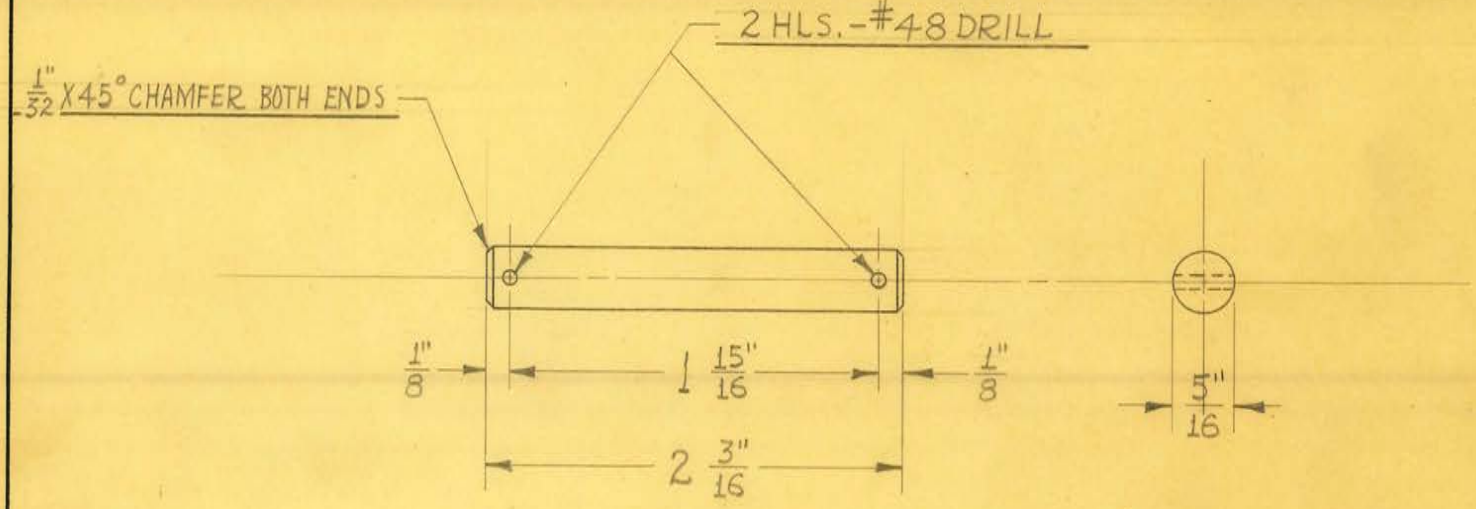


2 REQUIRED

OBSOLETE

Obsolete

| | | | |
|---|---|---|---|
| SIZE | 5/16" DIA. | ISSUE 1-14-41 | J.V.W. |
| KIND | C.R. STEEL | CHANGED | |
| SHAPE | | " | |
| FINISH | CAD #23 | " | |
| TEMP. | | " | |
| PATT. | | " | |

**TITLE:**
ARMY SHOCKPROOF DENTAL X-RAY UNIT
COUNTERWEIGHT PULLEY SHAFT

H. G. FISCHER & CO.
2335 WABANSIA AVE.
CHICAGO, ILL.

CAT. NO.

PART NO. 13700

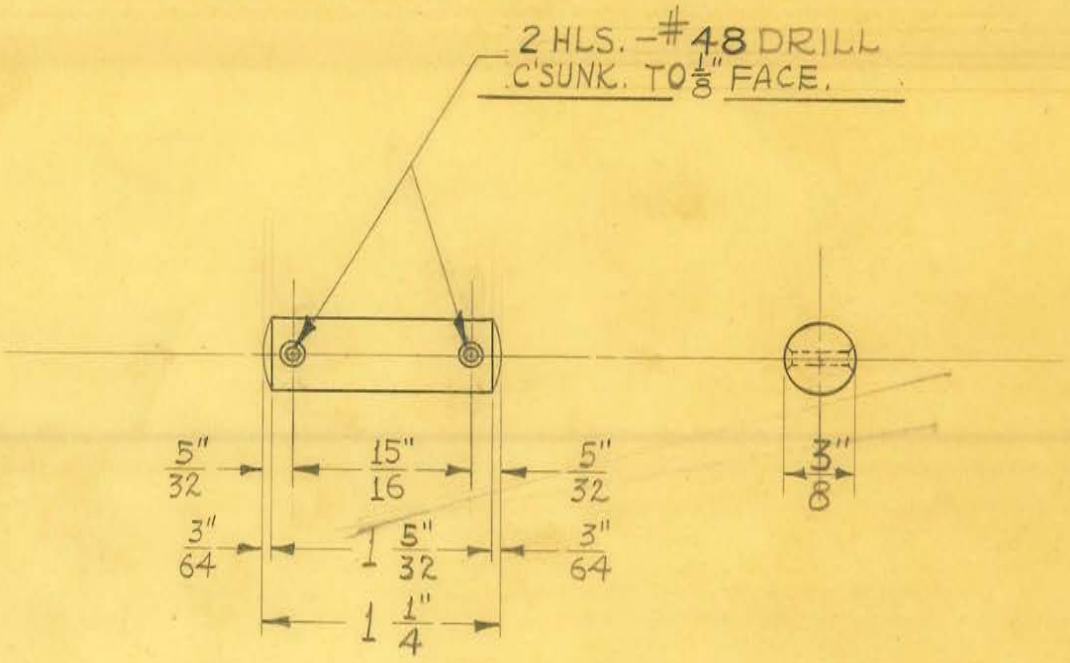


2 REQUIRED

OBSOLETE

| | | | |
|---|---|---|---|
| SIZE | 3/8" DIA. | ISSUE 1-15-41 | J.Y.W. |
| KIND | JEWELERS ROD | CHANGED | |
| SHAPE | | " | |
| FINISH | CAD. #23 | " | |
| TEMP. | | " | |
| PATT. | | " | |

**TITLE:**
ARMY SHOCKPROOF DENTAL X-RAY UNIT
FRONT & REAR CENTER ARM CONN. LINK SHAFT

| | | |
|---|---|---|
| H. G. FISCHER & CO. 2335 WABANSIA AVE. CHICAGO, ILL. | CAT. NO. | PART NO. 13701 |

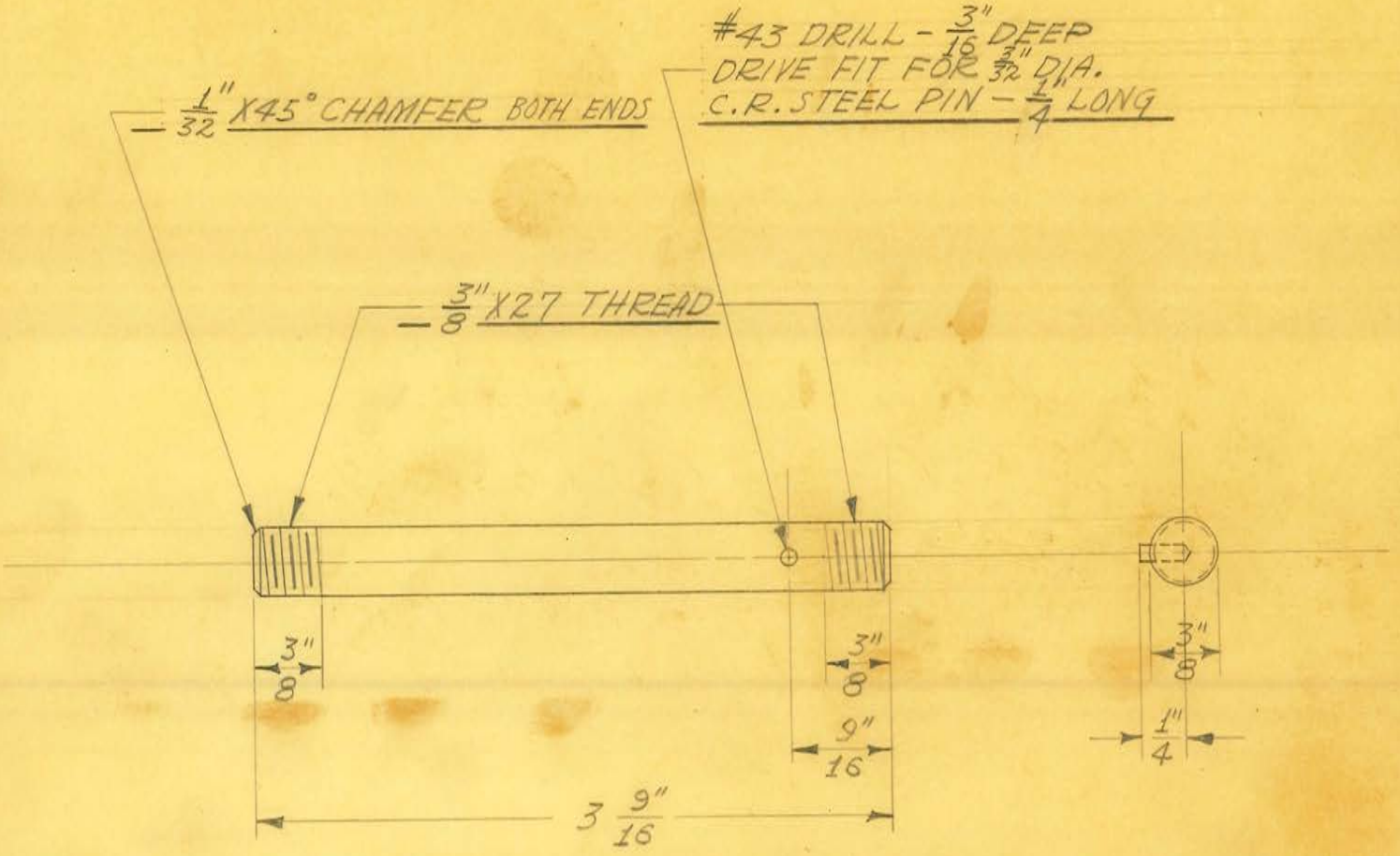


1 REQUIRED

OBSOLETE

Obsolete

| | | | |
|---|---|---|---|
| SIZE | 3/8" DIA. | ISSUE 11-22-40 | J.V.W. |
| KIND | JEWELERS | CHANGED | |
| SHAPE | ROD | " | |
| FINISH | CAD.#23 | " | |
| TEMP. | | " | |
| PATT. | | " | |

**TITLE:** U.S.A. SHOCKPROOF DENTAL X-RAY ARMS SWIVEL SHAFT - 3 9/16" LONG

H. G. FISCHER & CO.
2335 WABANSIA AVE.
CHICAGO, ILL.

CAT. NO.

PART NO. 13702G

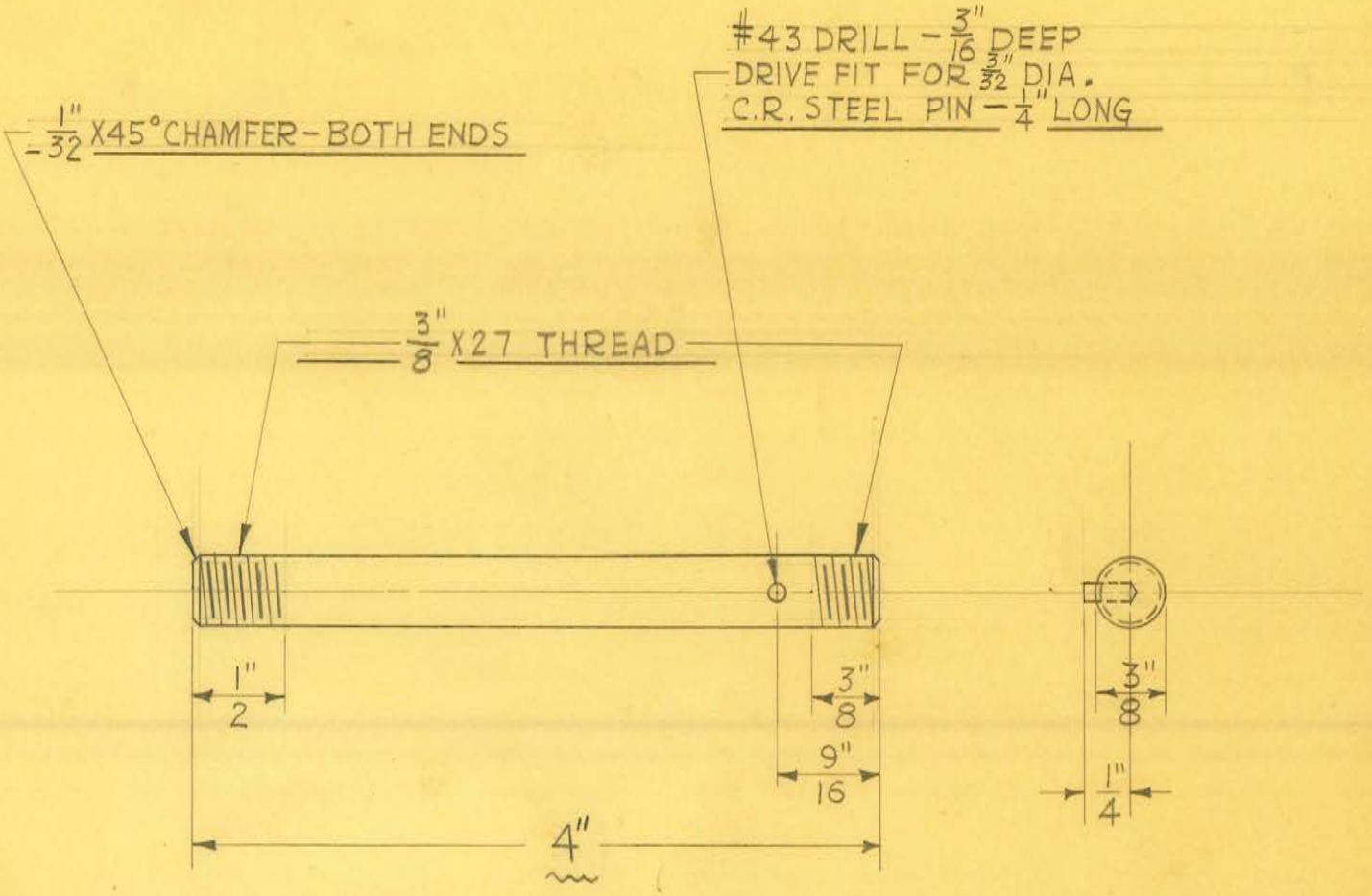


1 REQUIRED

OBSOLETE

Obsolete

| | | | | |
|---|---|---|---|---|
| SIZE | 3/8" DIA. | ISSUE 1-30-41 | J.V.W. | **TITLE:** ARMY SHOCKPROOF DENTAL X-RAY UNIT |
| KIND | JEWELERS | W.K. CHANGED 1-15-42 | J.V.W. | ARMS SWIVEL SHAFT - 4" LONG |
| SHAPE | ROD | " | | |
| FINISH | CAD.# 23 | " | | |
| TEMP. | | " | | |
| PATT. | | " | | |

H. G. FISCHER & CO.
2335 WABANSIA AVE.
CHICAGO, ILL.

CAT. NO.

PART NO. 13703GA

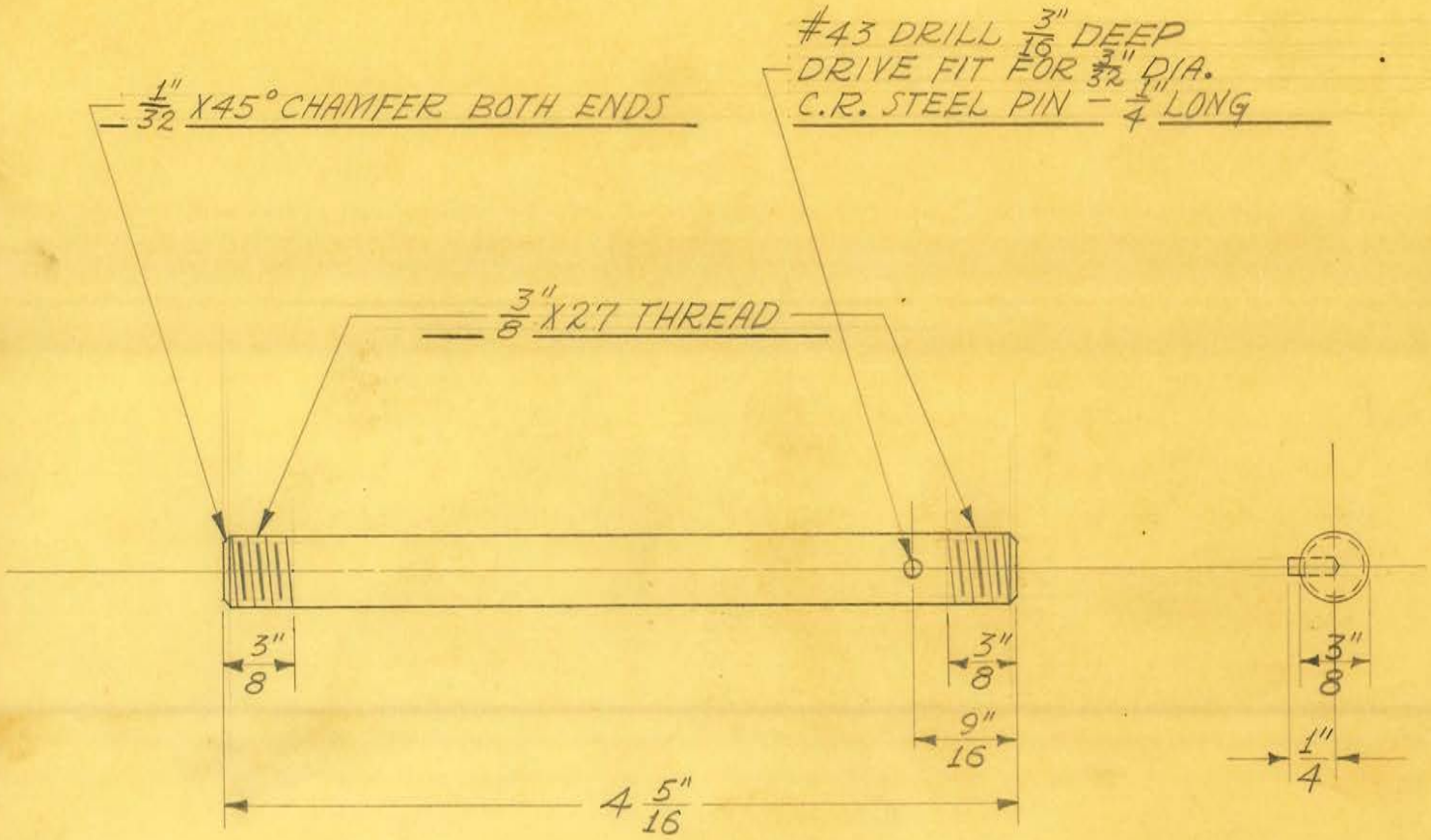


1 REQUIRED

OBSOLETE

Obsolete

| | | | |
|---|---|---|---|
| SIZE | 3/8" DIA. | ISSUE 11-22-40 | J.V.W. |
| KIND | JEWELERS | CHANGED | |
| SHAPE | ROD | " | |
| FINISH | CAD. #23 | " | |
| TEMP. | | " | |
| PATT. | | " | |

**TITLE:** U.S.A. SHOCKPROOF DENTAL X-RAY ARMS SWIVEL SHAFT - 4 5/16" LONG

H. G. FISCHER & CO.
2335 WABANSIA AVE.
CHICAGO, ILL.

CAT. NO.

PART NO. 13704G

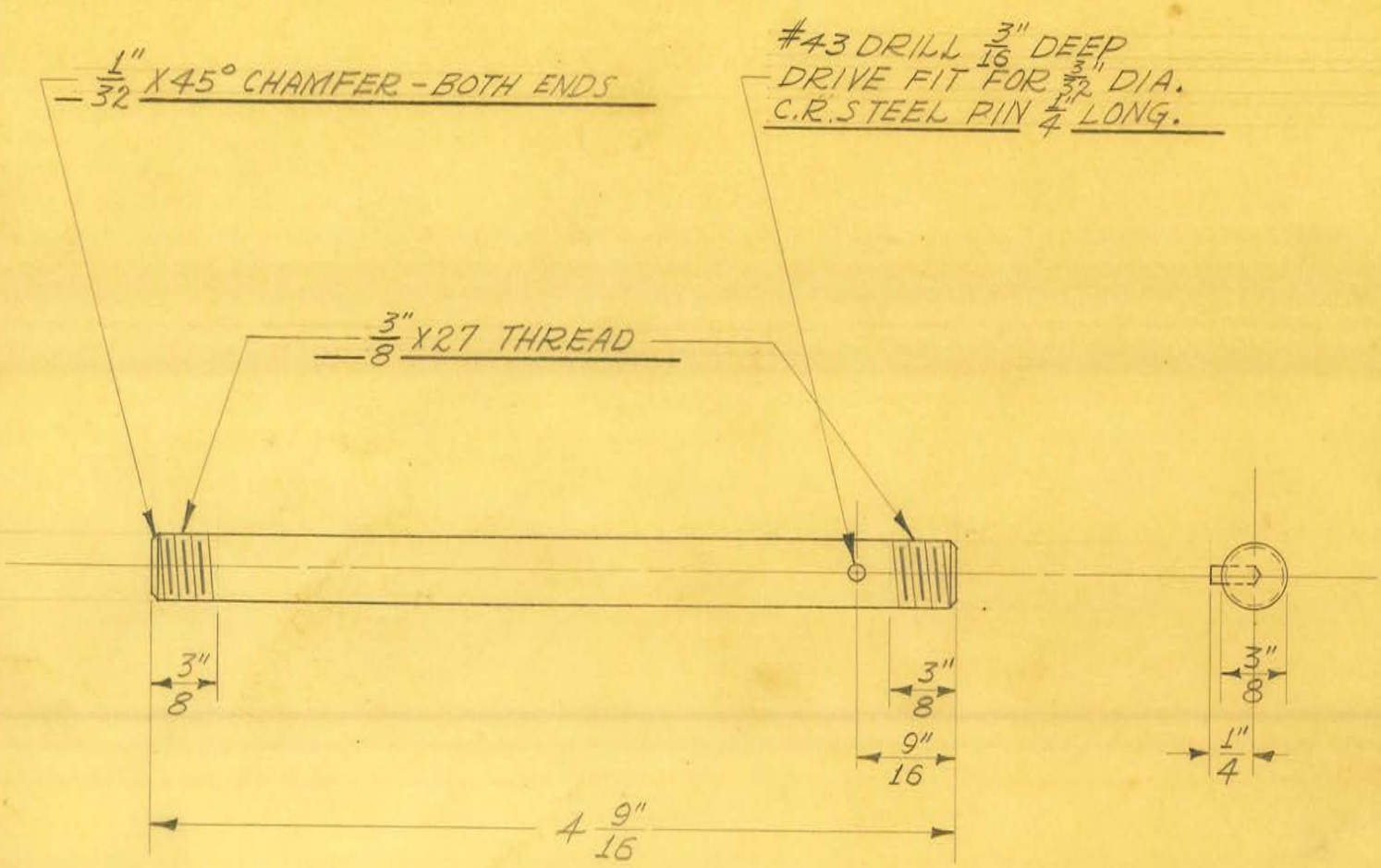


3 REQUIRED

OBSOLETE

Obsolete

| | | | | |
|---|---|---|---|---|
| SIZE | 3/8" DIA. | ISSUE 11-22-40 | J.V.W. | TITLE: U.S.A. SHOCKPROOF DENTAL X-RAY ARMS SWIVEL SHAFT - 4 9/16" LONG |
| KIND | JEWELERS | CHANGED | | |
| SHAPE | ROD | " | | |
| FINISH | CAD. #23 | " | | |
| TEMP. | | " | | |
| PATT. | | " | | |

H. G. FISCHER & CO.
2335 WABANSIA AVE.
CHICAGO, ILL.

CAT. NO.

PART NO. 13705G

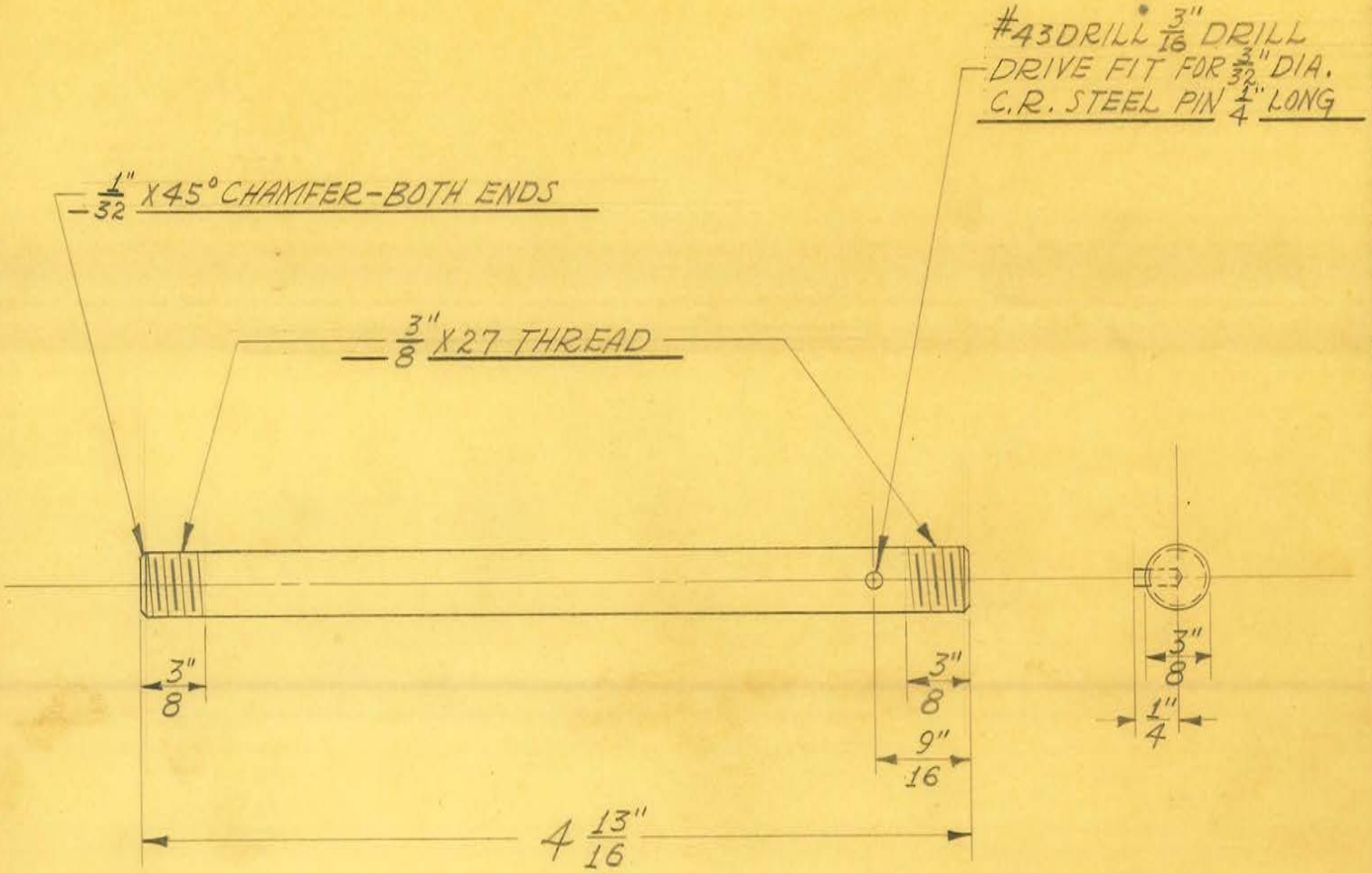


2 REQUIRED

OBSOLETE

Obsolete

| | | | |
|---|---|---|---|
| SIZE | 3/8" DIA. | ISSUE 11-22-40 | J.Y.W. |
| KIND | JEWELERS | CHANGED | |
| SHAPE | ROD | " | |
| FINISH | CAD. #23 | " | |
| TEMP. | | " | |
| PATT. | | " | |

**TITLE:** U.S.A. SHOCKPROOF DENTAL X-RAY ARMS SWIVEL SHAFT - 4 13/16" LONG

H. G. FISCHER & CO.
2338 WABANSIA AVE.
CHICAGO, ILL.

CAT. NO.

PART NO. 13706G

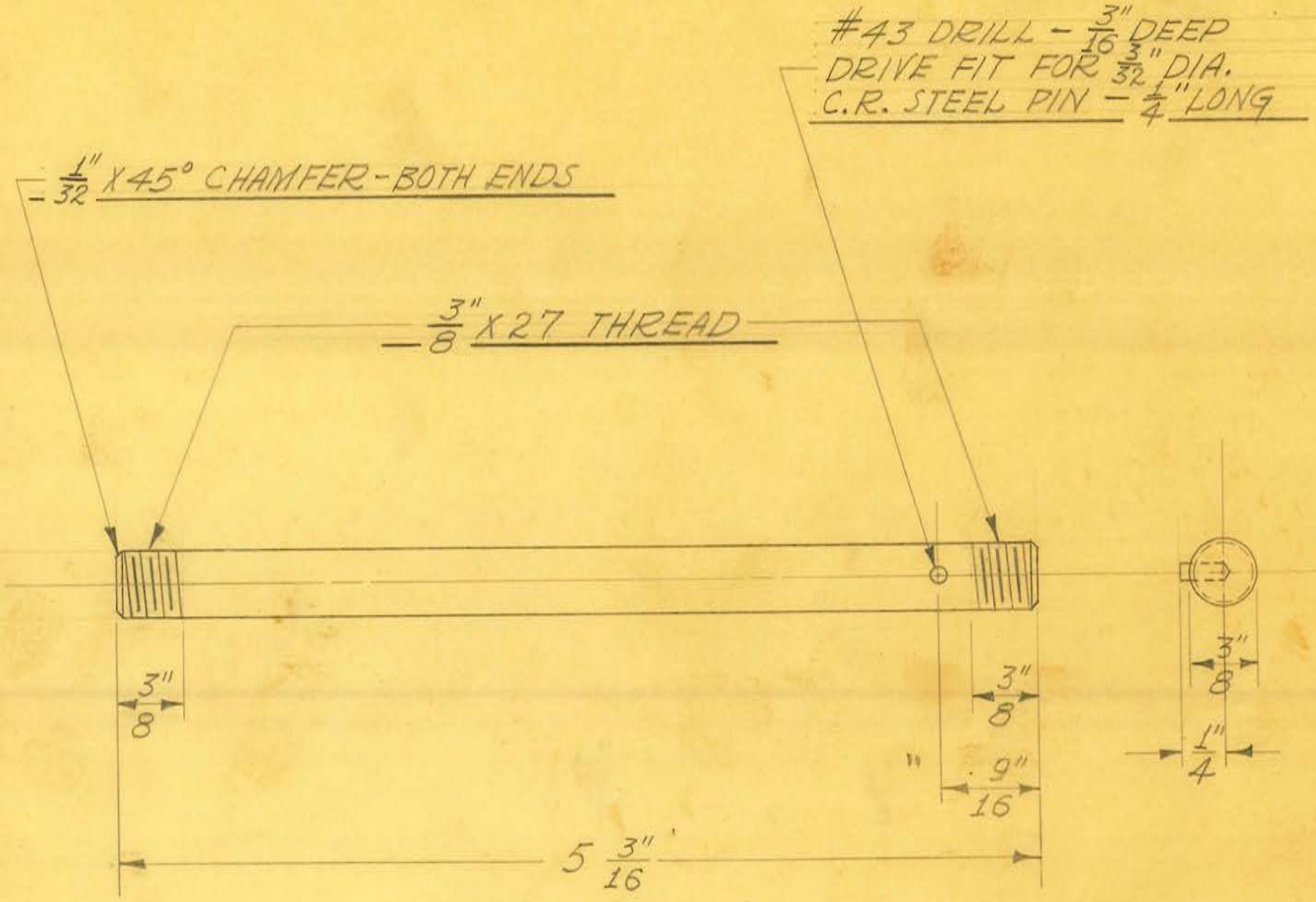


1 REQUIRED

OBSOLETE

obsolete

| | | | |
|---|---|---|---|
| SIZE | 3/8" DIA. | ISSUE 11-22-40 | J.V.W. |
| KIND | JEWELERS | CHANGED | |
| SHAPE | ROD | " | |
| FINISH | CAD. #23 | " | |
| TEMP. | | " | |
| PATT. | | " | |

**TITLE:** U.S.A. SHOCKPROOF DENTAL X-RAY ARMS SWIVEL SHAFT - 5 3/16" LONG

H. G. FISCHER & CO.
2335 WABANSIA AVE.
CHICAGO, ILL.

CAT. NO.

PART NO. 13707G

#43 DRILL – 3/16" DEEP
DRIVE FIT FOR 3/32" DIA
C.R. STEEL PIN — 1/4" LONG

1/32" X 45° CHAMFER – BOTH ENDS

3/8" X 27 THREAD

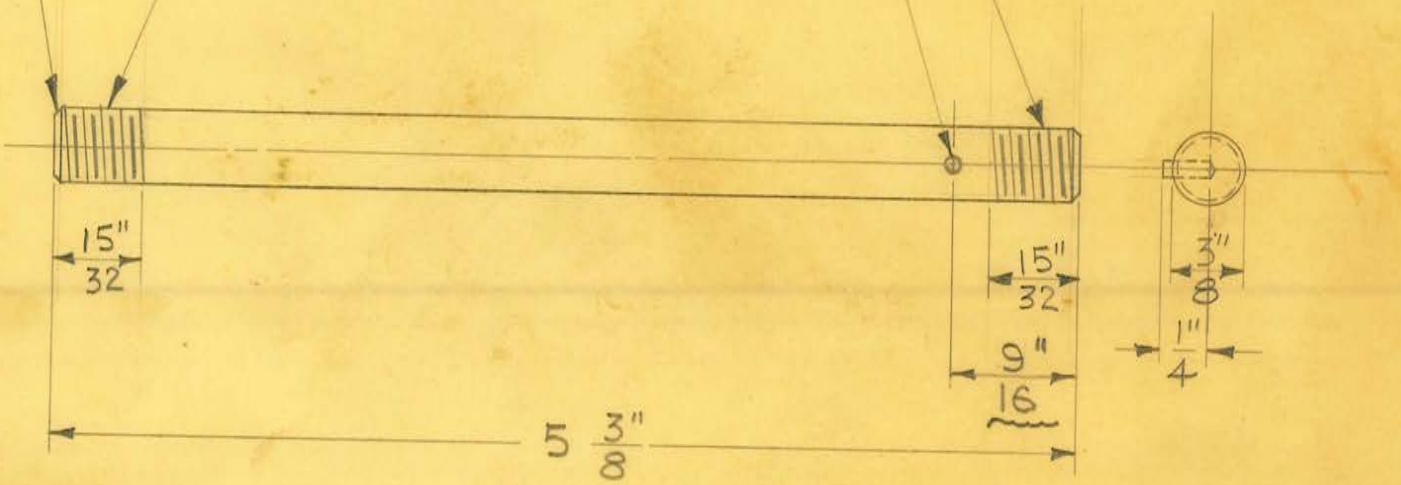


1 REQUIRED

OBSOLETE

| | | | | |
|---|---|---|---|---|
| SIZE | 3/8" DIA. | ISSUE 8-4-41 | J.Y.W. | TITLE: U.S. ARMY SHOCKPROOF DENTAL X-RAY ARMS SWIVEL SHAFT – 5 3/8" LONG |
| KIND | JEWELERS | CHANGED | | |
| SHAPE | ROD | " | | |
| FINISH | CAD. #23 | " | | |
| TEMP. | | " | | |
| PATT. | | " | | |

H. G. FISCHER & CO.
2335 WABANSIA AVE.
CHICAGO, ILL.

CAT. NO.

PART NO. 13707GA

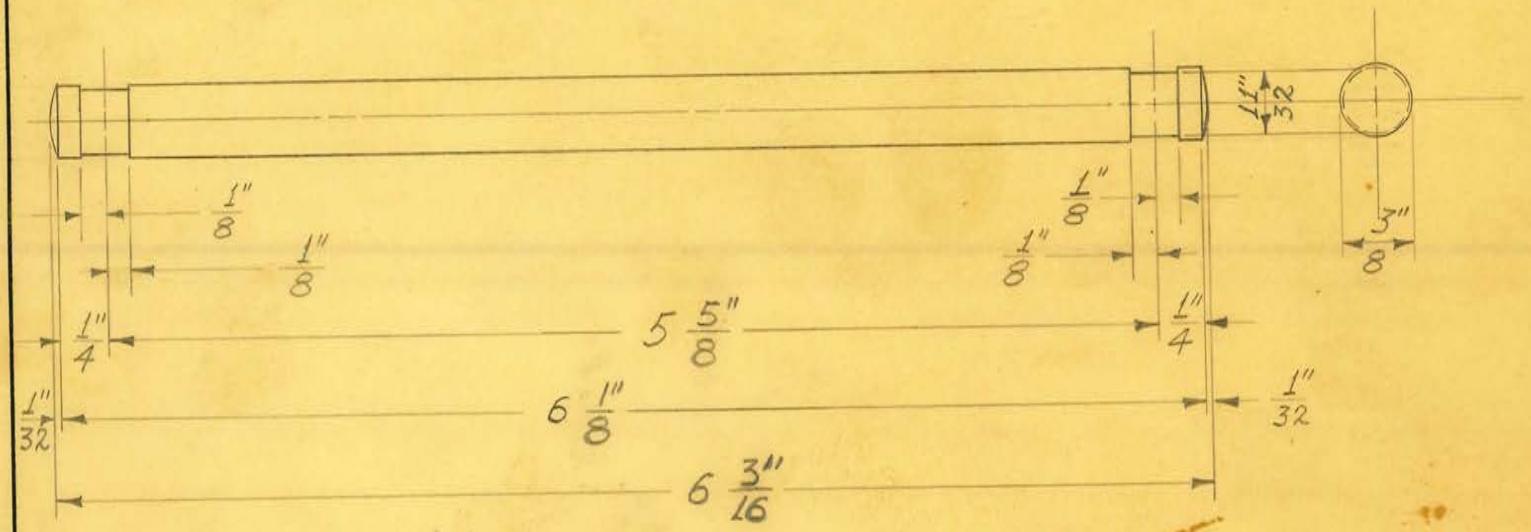


1 REQUIRED

OBSOLETE

| | | | |
|---|---|---|---|
| SIZE | 3/8" DIA. | ISSUE 11-22-40 | J.V.W. |
| KIND | JEWELERS | CHANGED | |
| SHAPE | ROD | " | |
| FINISH | CAD. #23 | " | |
| TEMP. | | " | |
| PATT. | | " | |

**TITLE:** U.S.A. SHOCKPROOF DENTAL X-RAY ARM SWIVEL & C'BALANCE. CONN. SUPP. SHAFT

H. G. FISCHER & CO.
2335 WABANSIA AVE.
CHICAGO, ILL.

CAT. NO.

PART NO. 13708

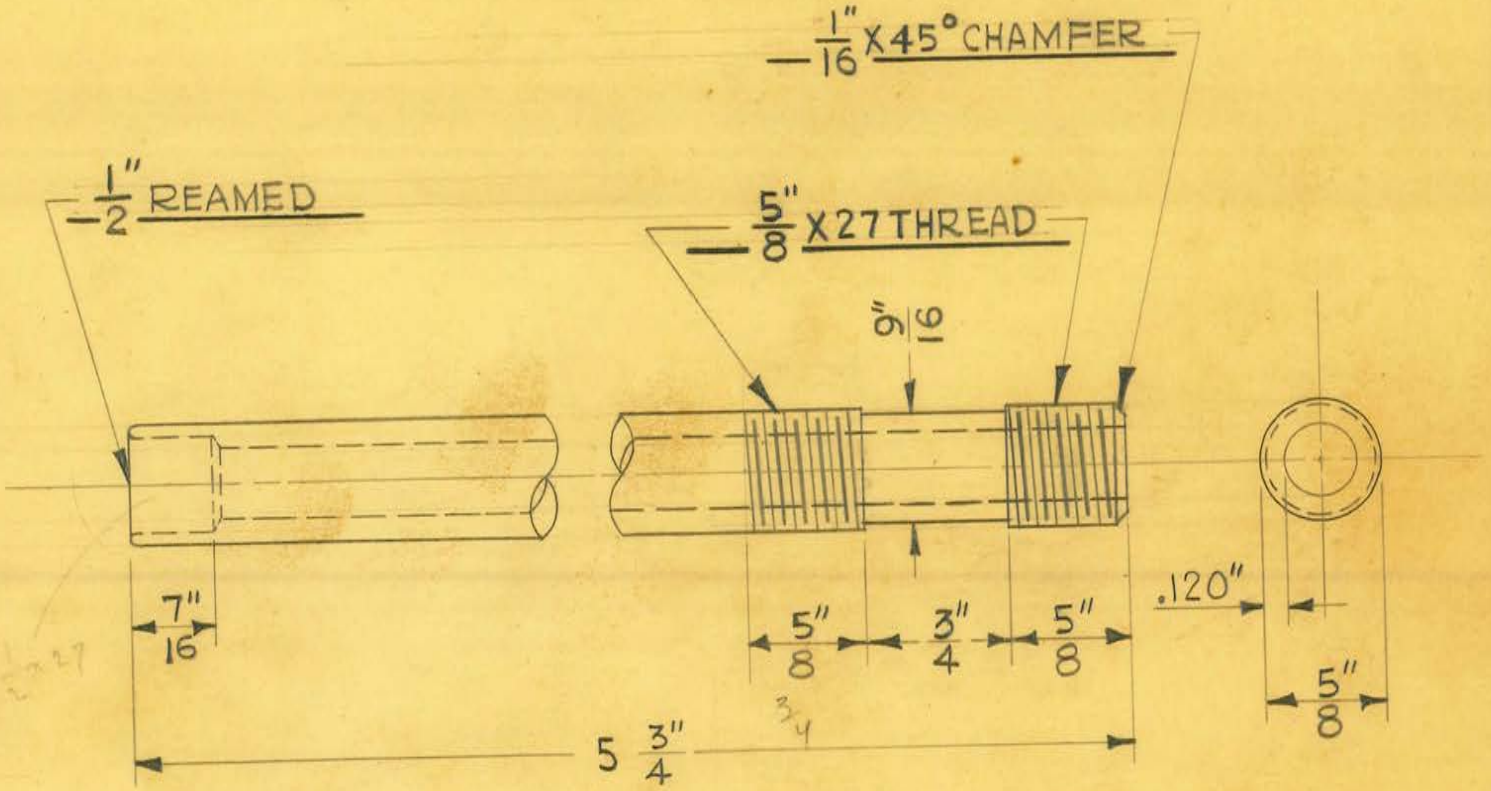


1 REQUIRED

5/8" O.D. X #11 GA. (.120") WALL SHELBY SEAMLESS STEEL TUBING

OBSOLETE

obsolete

| | | | |
|---|---|---|---|
| SIZE | | ISSUE 6-16-41 | J.V.W. |
| KIND | | CHANGED | |
| SHAPE | | " | |
| FINISH | CAD. #23 | " | |
| TEMP. | | " | |
| PATT. | | " | |

**TITLE:** U.S.A. SHOCKPROOF DENTAL X-RAY UNIT
VERTICAL MOVEMENT – BUMPER SHAFT

H. G. FISCHER & CO.
2335 WABANSIA AVE.
CHICAGO, ILL.

CAT. NO.

PART NO. 13709

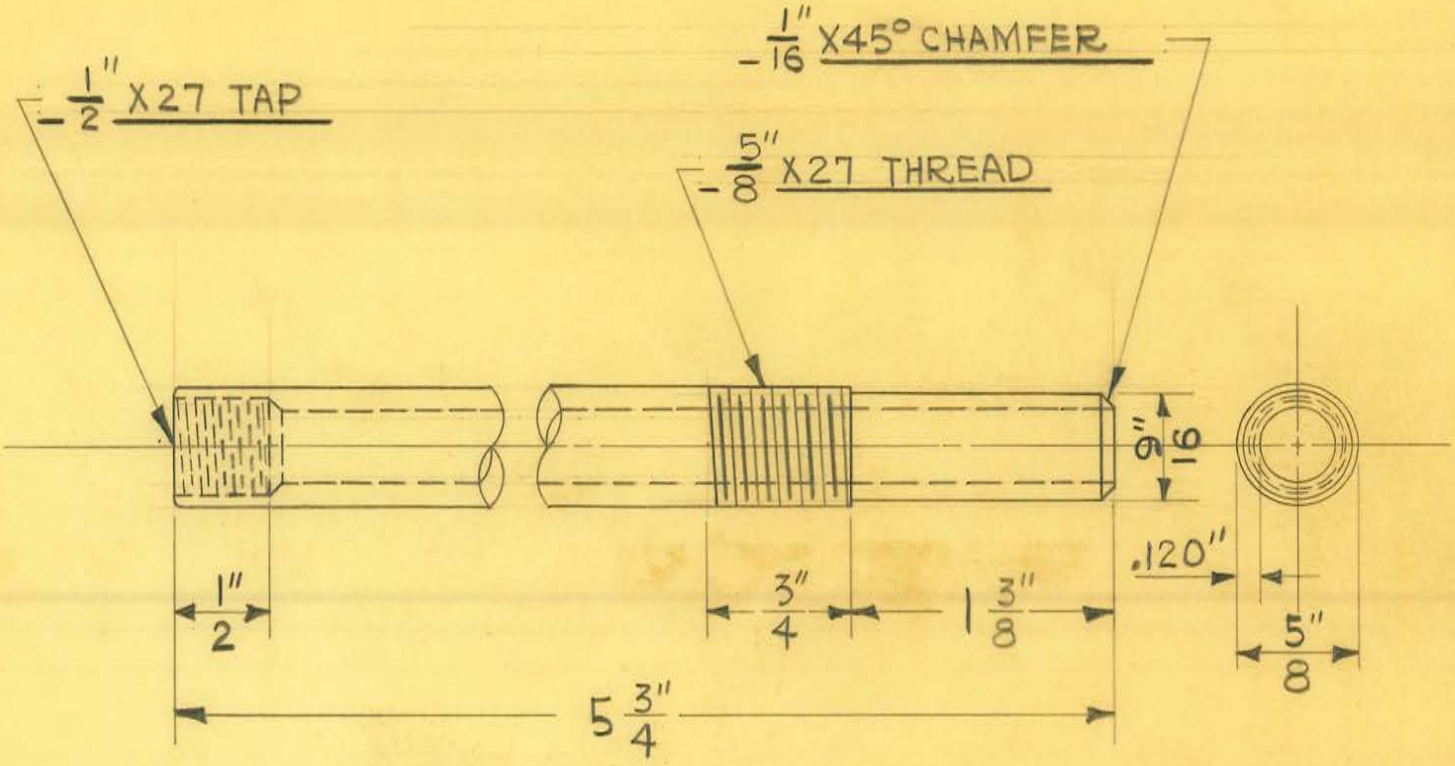


1 REQUIRED

5/8" O.D. X #11GA. (.120") WALL SHELBY SEAMLESS STEEL TUBING

OBSOLETE

Obsolete

| | | | |
|---|---|---|---|
| SIZE | | ISSUE 3-4-42 | J.V.W. |
| KIND | | CHANGED | |
| SHAPE | | " | |
| FINISH | CAD. #23 | " | |
| TEMP. | | " | |
| PATT. | | " | |

**TITLE:** U.S.A. SHOCKPROOF DENTAL X-RAY UNIT
VERTICAL MOVEMENT - BUMPER SHAFT

| | | |
|---|---|---|
| H. G. FISCHER & CO. 2335 WABANSIA AVE. CHICAGO, ILL. | CAT. NO. | PART NO. 13709A |

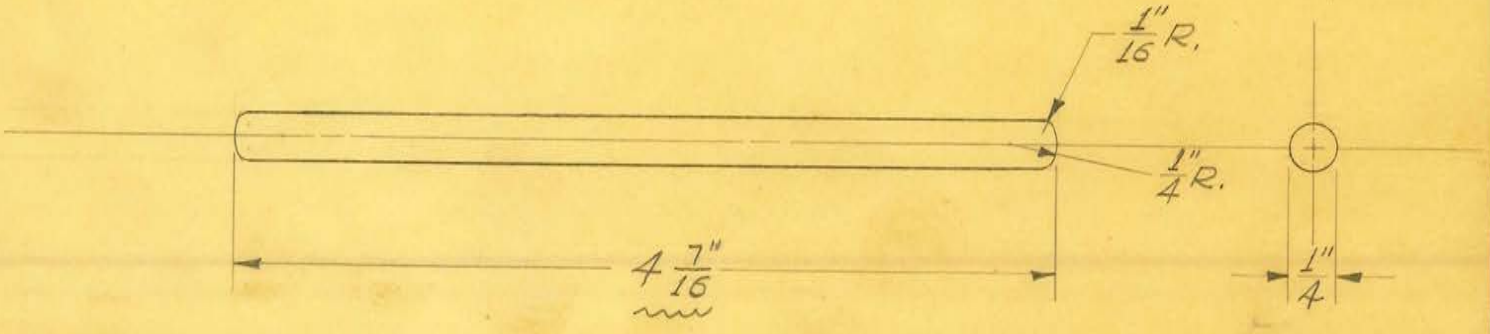


1 REQUIRED

OBSOLETE

| | | | |
|---|---|---|---|
| SIZE | 1/4" DIA. | ISSUE 11-22-40 | J.V.W. |
| KIND | C.R. STEEL | CHANGED | |
| SHAPE | | " | |
| FINISH | CAD. #23 | " | |
| TEMP. | | " | |
| PATT. | | " | |

**TITLE:**
U.S.A. SHOCKPROOF DENTAL X-RAY
TRANSF. SUPPORT ARM BUMPER ROD

H. G. FISCHER & CO.
2335 WABANSIA AVE.
CHICAGO, ILL.

CAT. NO.

PART NO. 13711

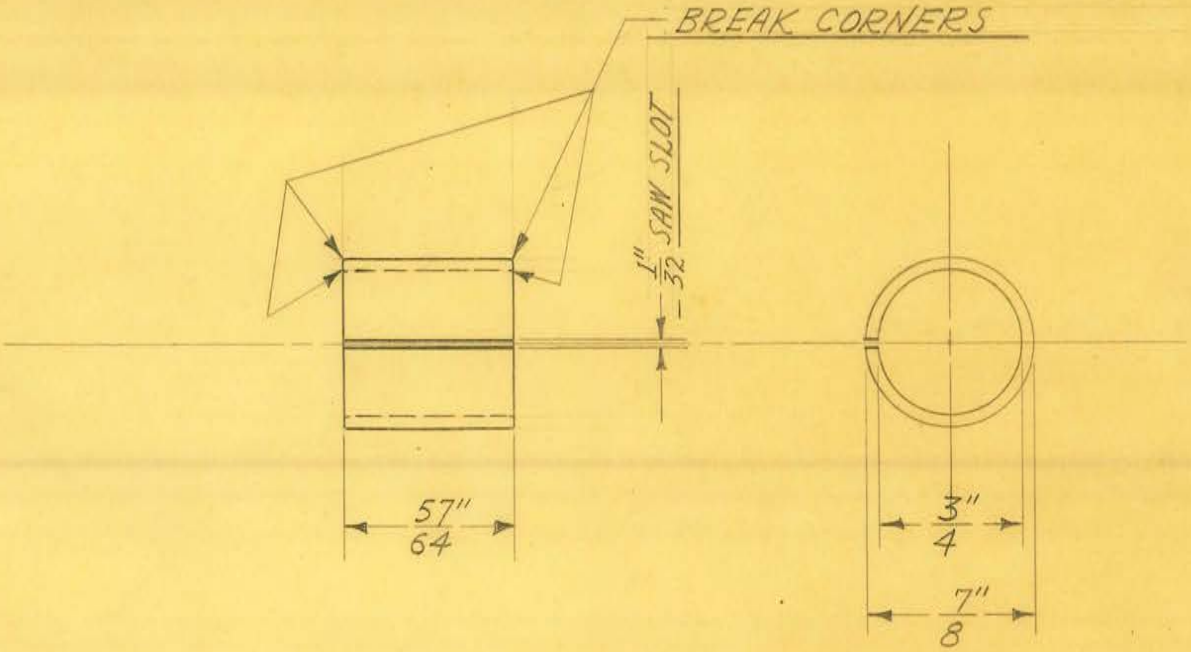


2 REQUIRED

OBSOLETE

| | | | | |
|---|---|---|---|---|
| SIZE | 7/8" O.D. X 3/4" I.D. | ISSUE 12-16-40 | J.V.W. | TITLE: U.S.A. SHOCKPROOF DENTAL X-RAY TRANSFORMER TANK BEARING BUSHING |
| KIND | NAT. BAKELITE | CHANGED | | |
| SHAPE | TUBING | " | | |
| FINISH | | " | | |
| TEMP. | | " | | |
| PATT. | | " | | |

H. G. FISCHER & CO.
2335 WABANSIA AVE.
CHICAGO, ILL.

CAT. NO.

PART NO. 13712

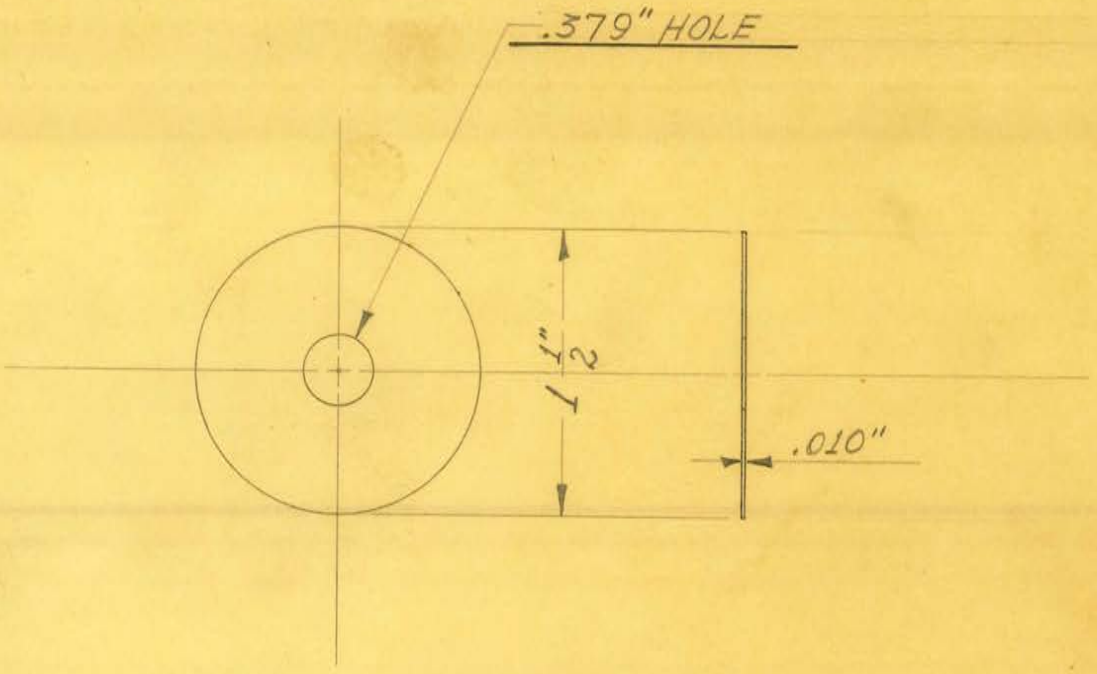


22 REQUIRED

OBSOLETE

Obsolete

| | | | |
|---|---|---|---|
| SIZE | .010" SHEET | ISSUE 11-22-40 | J.V.W. |
| KIND | SHIM STOCK | CHANGED | |
| SHAPE | | " | |
| FINISH | | " | |
| TEMP. | | " | |
| PATT. | | " | |

**TITLE:** U.S.A. SHOCKPROOF DENTAL X-RAY ARMS SWIVEL FRICTION WASHER

H. G. FISCHER & CO.
2335 WABANSIA AVE.
CHICAGO, ILL.

CAT. NO.

PART NO. 13713

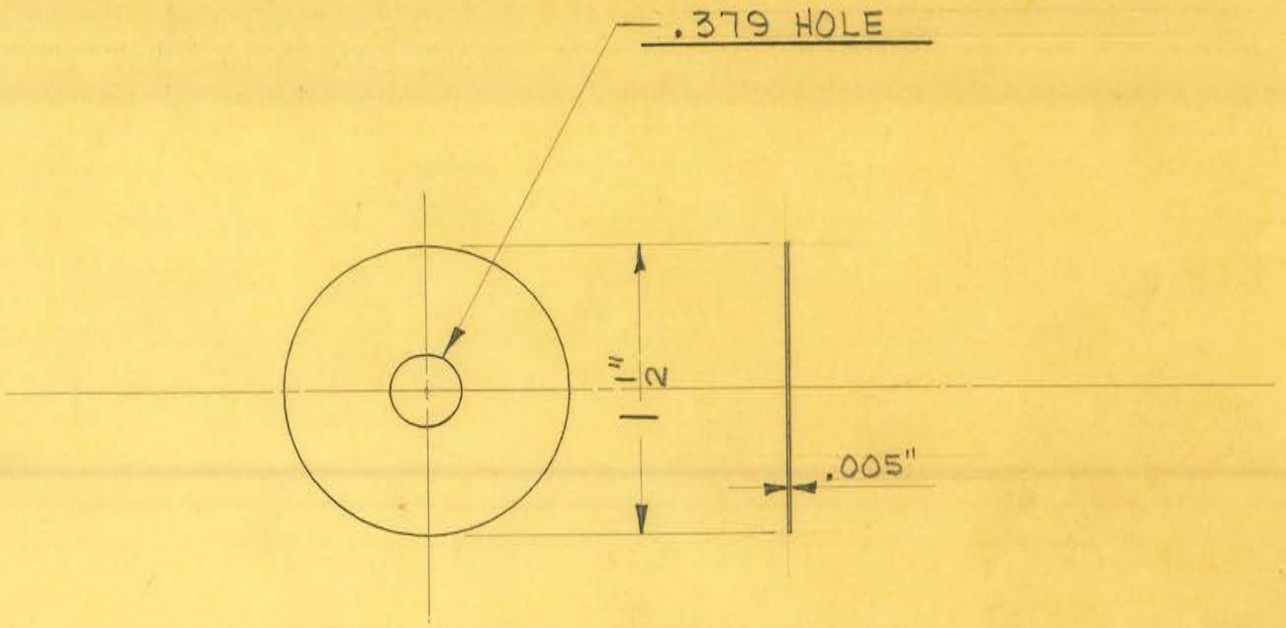


10 REQUIRED

OBSOLETE

Obsolete

| | | | |
|---|---|---|---|
| SIZE | .005" SHEET | ISSUE 6-20-41 | J.V.W. |
| KIND | SHIM STOCK | CHANGED | |
| SHAPE | | " | |
| FINISH | | " | |
| TEMP. | | " | |
| PATT. | | " | |

**TITLE:** U.S.A. SHOCKPROOF DENTAL X-RAY ARMS SWIVEL FRICTION WASHER .005"

H. G. FISCHER & CO.
2335 WABANSIA AVE.
CHICAGO. ILL.

CAT. NO.

PART NO. 13713 1/2

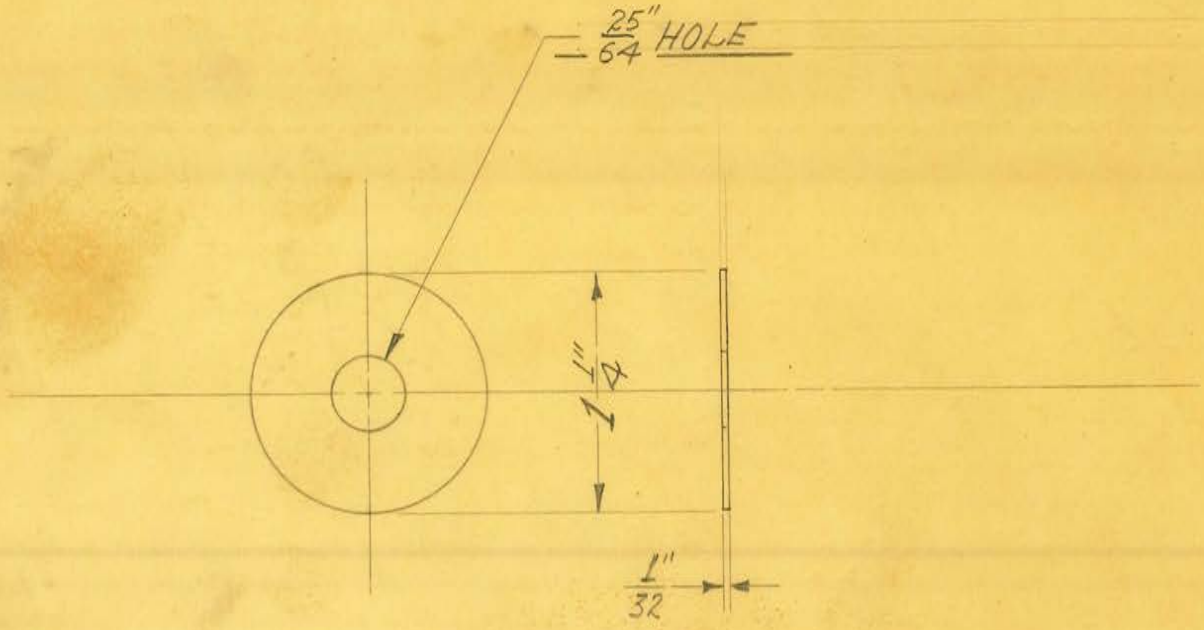


4 REQUIRED

OBSOLETE

| | | | |
|---|---|---|---|
| SIZE | 1/32" SHEET | ISSUE 12-17-40 | J.V.W. |
| KIND | BLACK FIBRE | CHANGED | |
| SHAPE | | " | |
| FINISH | | " | |
| TEMP. | | " | |
| PATT. | | " | |

**TITLE:** U.S.A. SHOCKPROOF DENTAL X-RAY TRANSF. HEAD SUPPORT-LOWERING FRICTION WASHER

H. G. FISCHER & CO.
2335 WABANSIA AVE.
CHICAGO, ILL.

CAT. NO.

PART NO. 13714

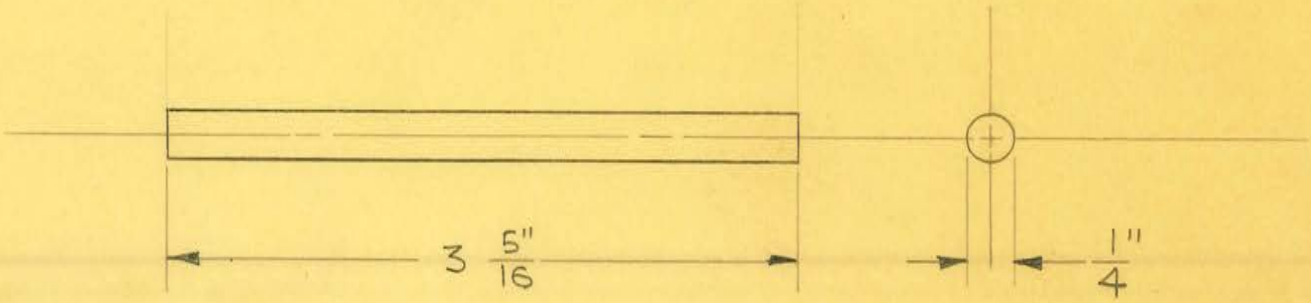


4 REQUIRED

OBSOLETE

Obsolete

| | | | |
|---|---|---|---|
| SIZE | 1/4" DIA. | ISSUE 8-4-41 | J.V.W. |
| KIND | C.R. STEEL | CHANGED | |
| SHAPE | | " | |
| FINISH | | " | |
| TEMP. | | " | |
| PATT. | | " | |

**TITLE:** U.S. ARMY SHOCKPROOF DENTAL X-RAY COUNTERWEIGHT STUD PIN

H. G. FISCHER & CO.
2338 WABANSIA AVE.
CHICAGO, ILL.

CAT. NO.

PART NO. 13715

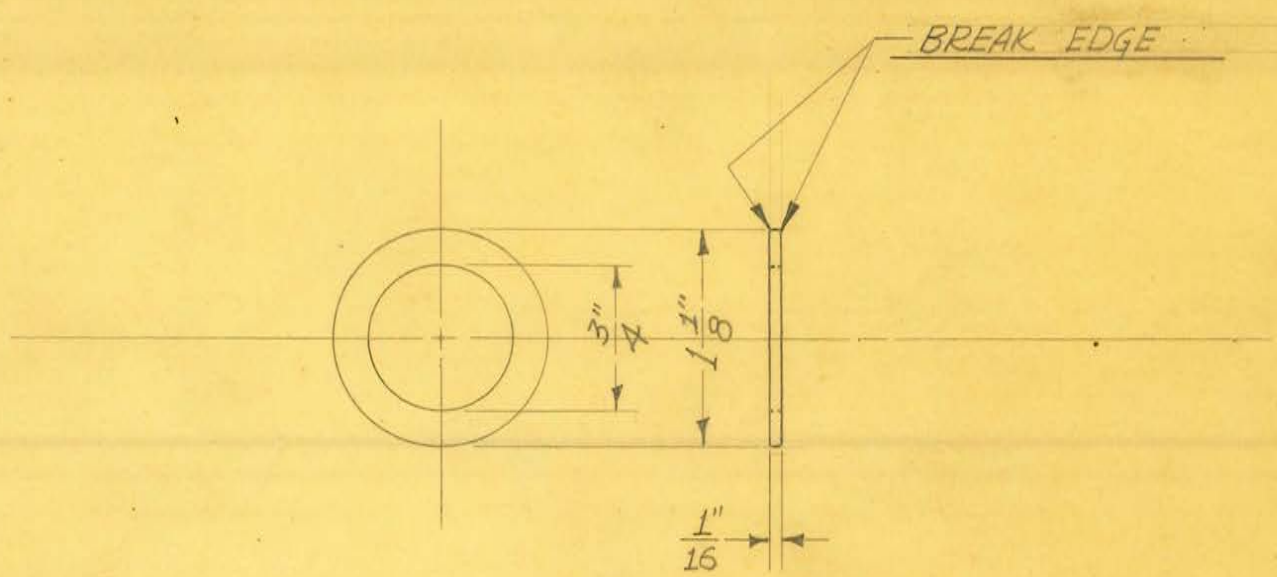


2 REQUIRED

OBSOLETE

| | | | |
|---|---|---|---|
| SIZE | 1/16" SHEET | ISSUE 12-16-40 | J.V.W. |
| KIND | BLK. FIBRE | CHANGED | |
| SHAPE | | " | |
| FINISH | | " | |
| TEMP. | | " | |
| PATT. | | " | |

**TITLE:** U.S.A. SHOCKPROOF DENTAL X-RAY TRANSF. TANK BEARING PLATE FRICTION WASHER

H. G. FISCHER & CO.
2335 WABANSIA AVE.
CHICAGO, ILL.

CAT. NO.

PART NO. 13717

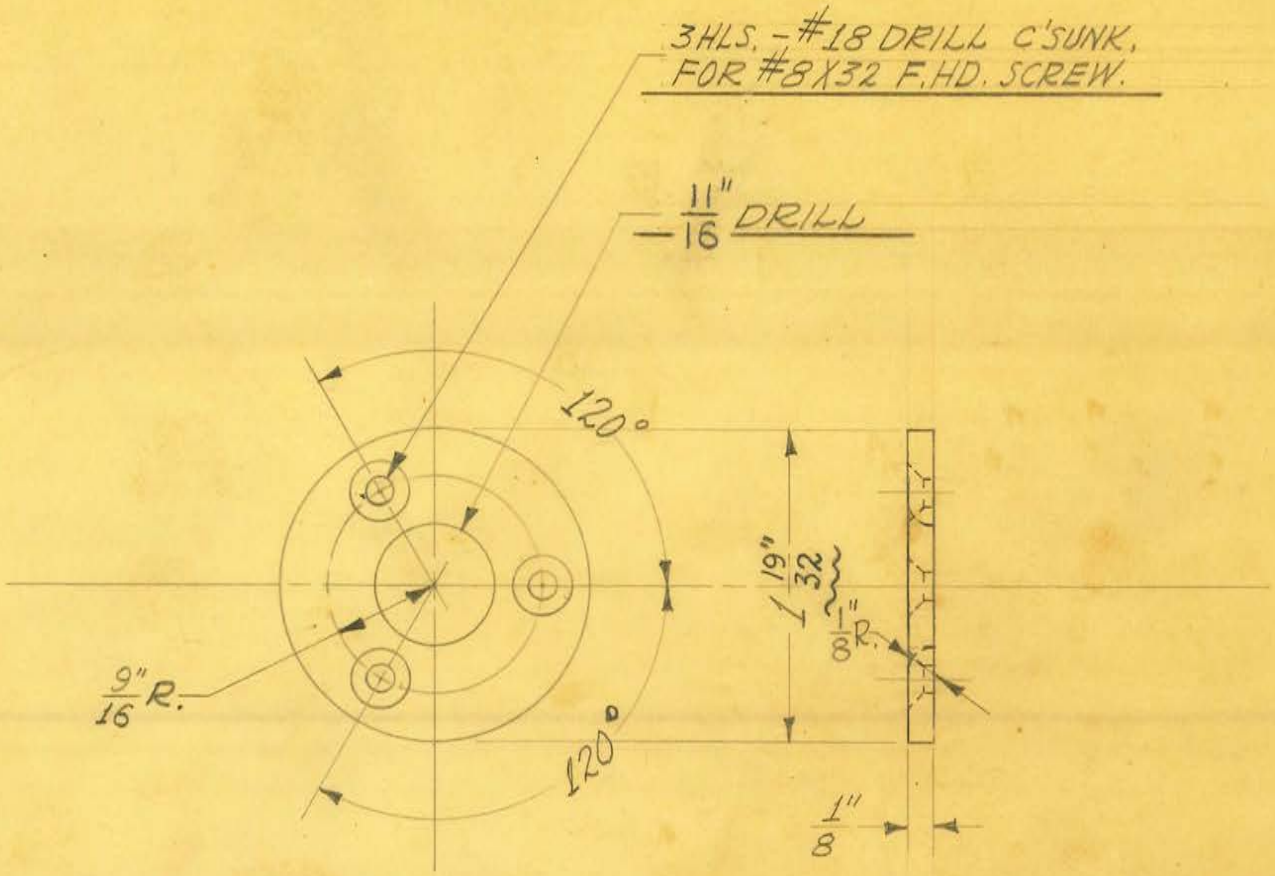


1 REQUIRED

OBSOLETE

| | | | | |
|---|---|---|---|---|
| SIZE | 1 5/8" DIA. | ISSUE 11-29-40 | J.V.W. | TITLE: U.S.A. SHOCKPROOF DENTAL X-RAY SWIVEL ARM SUPPORT RETAINING WASHER |
| KIND | C.R. STEEL | CHANGED | | |
| SHAPE | | " | | |
| FINISH | BLACK #48 | " | | |
| TEMP. | | " | | |
| PATT. | | " | | |

H. G. FISCHER & CO.
2335 WABANSIA AVE.
CHICAGO, ILL.

CAT. NO.

PART NO. 13718

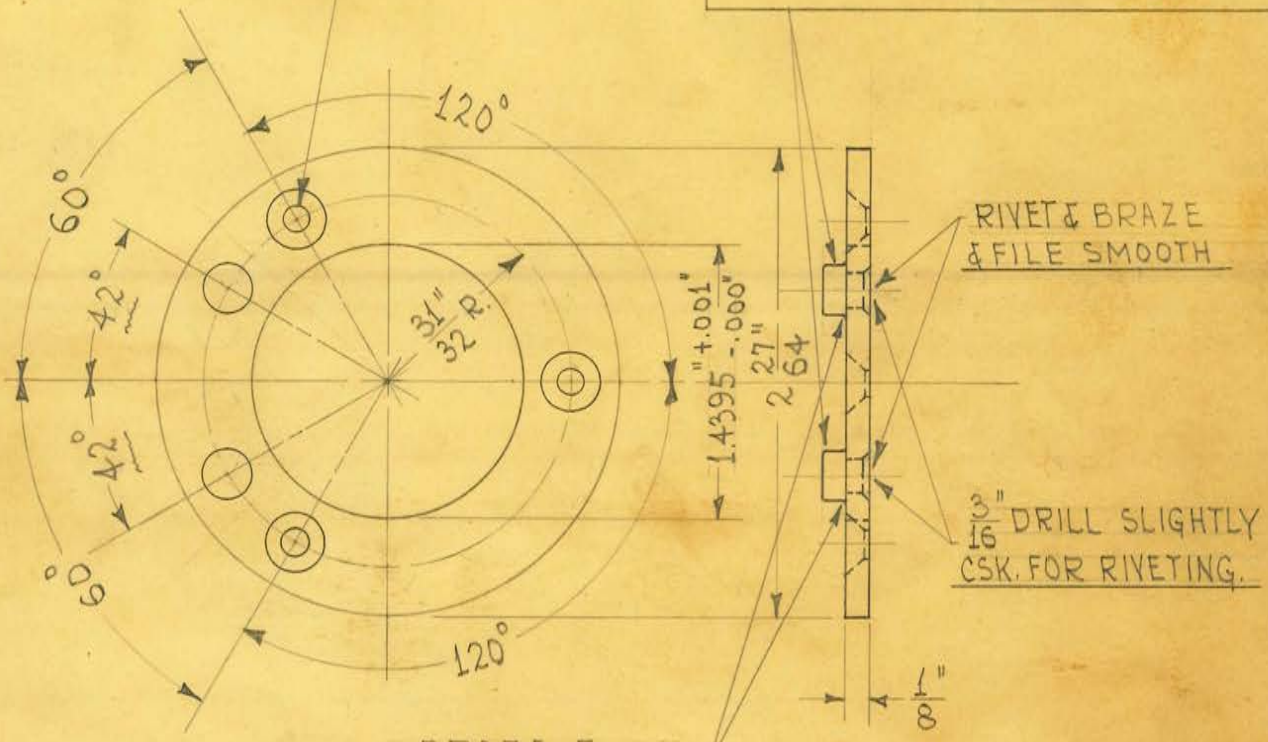


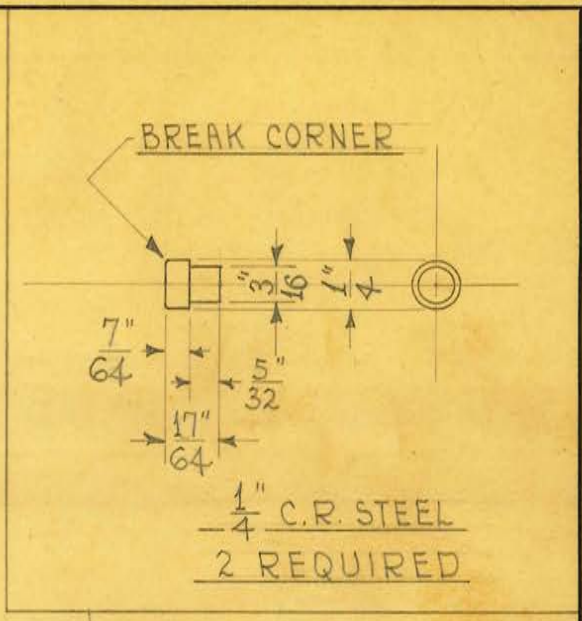


OBSOLETE

| | | | |
|---|---|---|---|
| SIZE | 1/8" SHEET | ISSUE 11-29-40 | HE. |
| KIND | C.R. STEEL | CHANGED 6-10-43 | HE. |
| SHAPE | | " | |
| FINISH | CAD. #23 | " | |
| TEMP. | | " | |
| PATT. | | " | |

**TITLE:**
U.S.A. SHOCKPROOF DENTAL X-RAY UNIT-
TRANSF. HEAD FORK SUPPORTING WASHER

H. G. FISCHER & CO.
2338 WABANSIA AVE.
CHICAGO, ILL.

CAT. NO.

PART NO. 13719GA

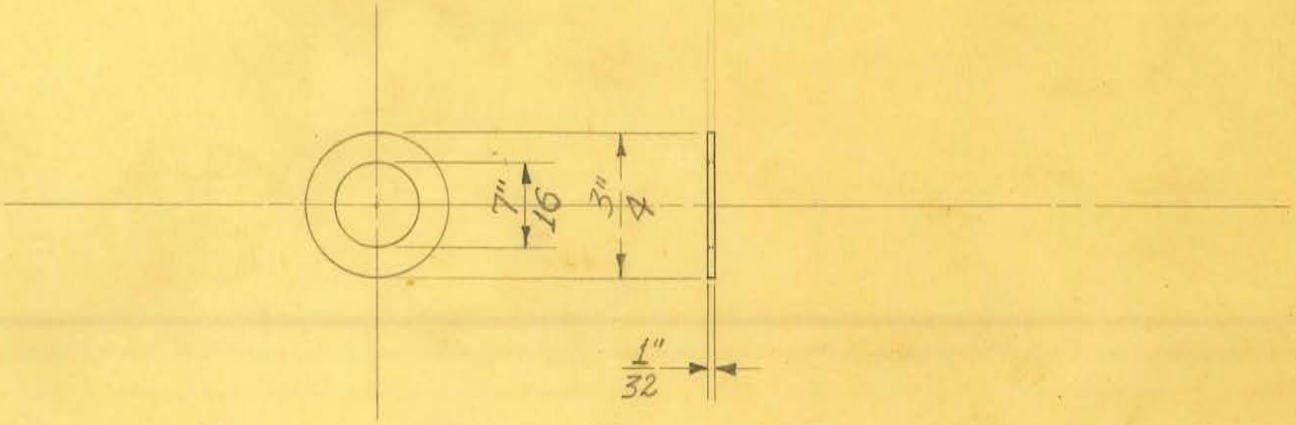


1 REQUIRED

OBSOLETE

Obsolete

| | | | |
|---|---|---|---|
| SIZE | 1/32" SHEET | ISSUE 12-16-40 | J.V.W. |
| KIND | NEOPRENE | CHANGED | |
| SHAPE | | " | |
| FINISH | | " | |
| TEMP. | | " | |
| PATT. | | " | |

**TITLE:** U.S.A., SHOCKPROOF DENTAL X-RAY TRANSFORMER OIL PLUG GASKET

H. G. FISCHER & CO.
2335 WABANSIA AVE.
CHICAGO, ILL.

CAT. NO.

PART NO. 13721

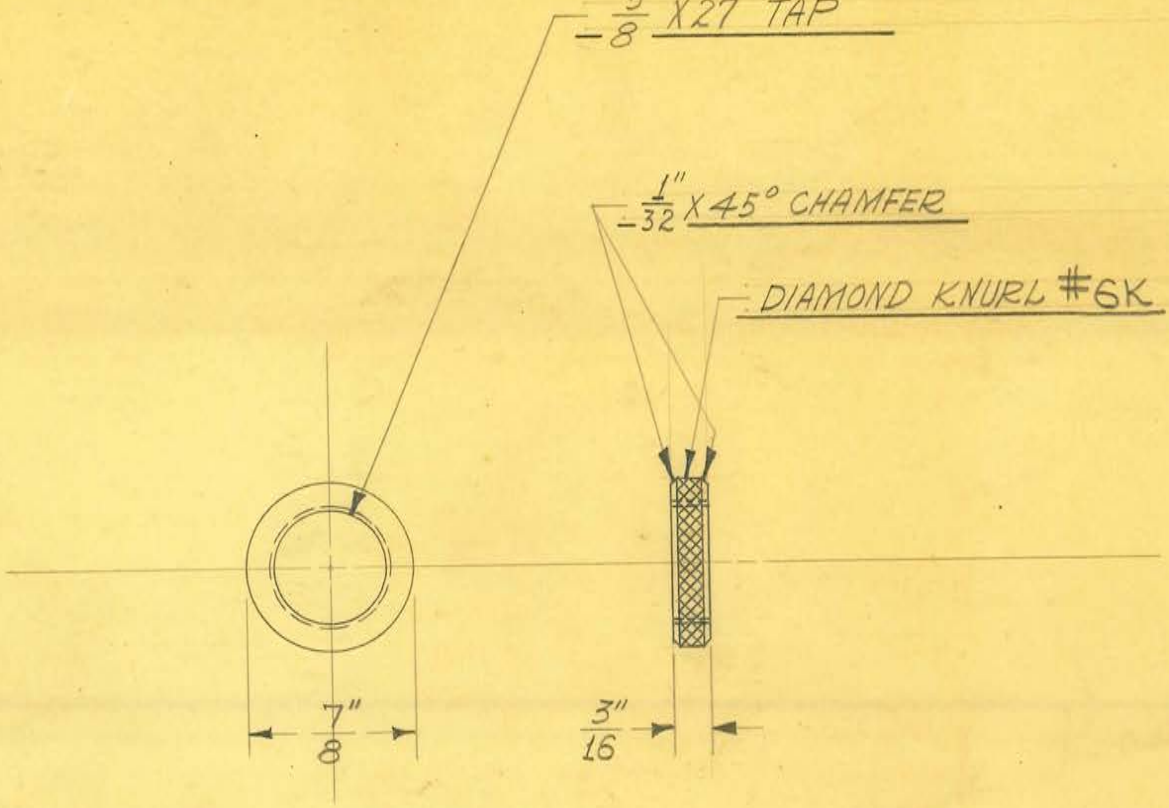


1 REQUIRED

OBSOLETE

Obsolete

| | | | |
|---|---|---|---|
| SIZE | 7/8" DIA. | ISSUE 11-27-40 | J.V.W. |
| KIND | BRASS ROD | CHANGED | |
| SHAPE | | " | |
| FINISH | CHR. #2 | " | |
| TEMP. | | " | |
| PATT. | | " | |

**TITLE:** U.S.A. SHOCKPROOF DENTAL X-RAY UNIT
VERTICAL TUBE LOCK NUT

H. G. FISCHER & CO.
2335 WABANSIA AVE.
CHICAGO, ILL.

CAT. NO.

PART NO. 13722

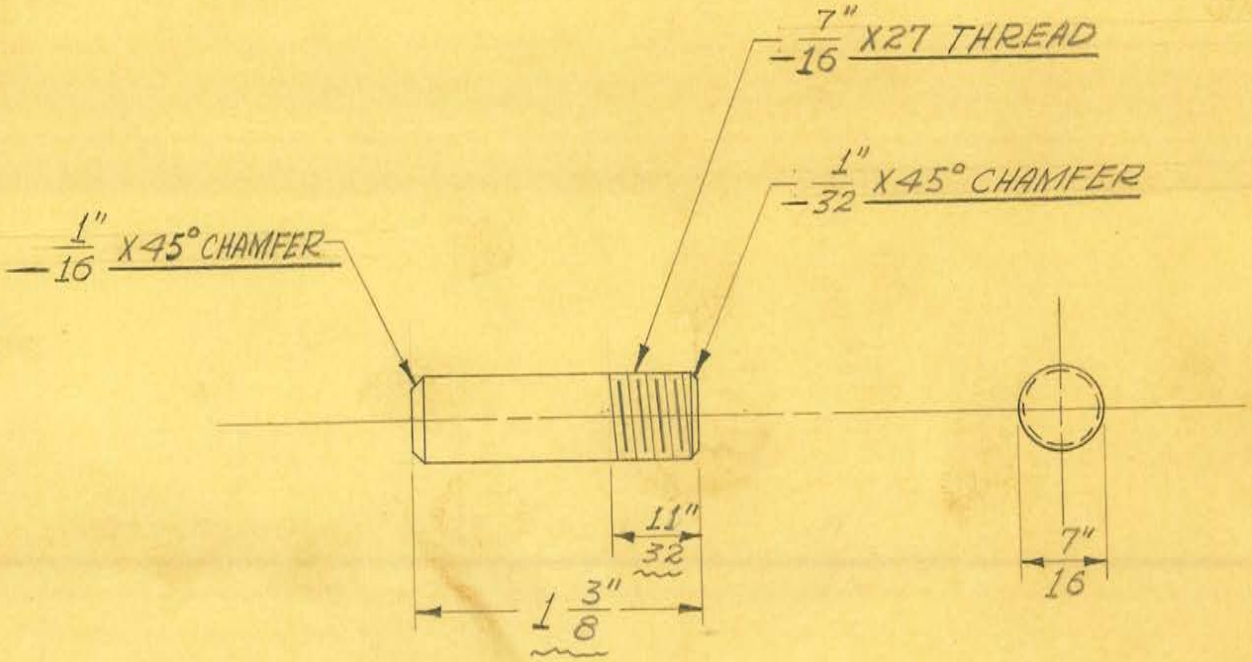


2 REQUIRED

OBSOLETE

| | | | | |
|---|---|---|---|---|
| SIZE | 7/16" DIAM. | ISSUE 4-10-39 | J.W. | TITLE: FISCHER MOD. "GM." MOBILE UNIT ROLLER SUPP. BRACKET ALIGNING PIN |
| KIND | C.R. STEEL | CHANGED 10-28-40 | J.W. | |
| SHAPE | ROD | " | | |
| FINISH | DU-LITE #8 | " | | |
| TEMP. | | " | | |
| PATT. | | " | | |

H. G. FISCHER & CO.
2335 WABANSIA AVE.
CHICAGO, ILL.

CAT. NO.

PART NO. 12199A

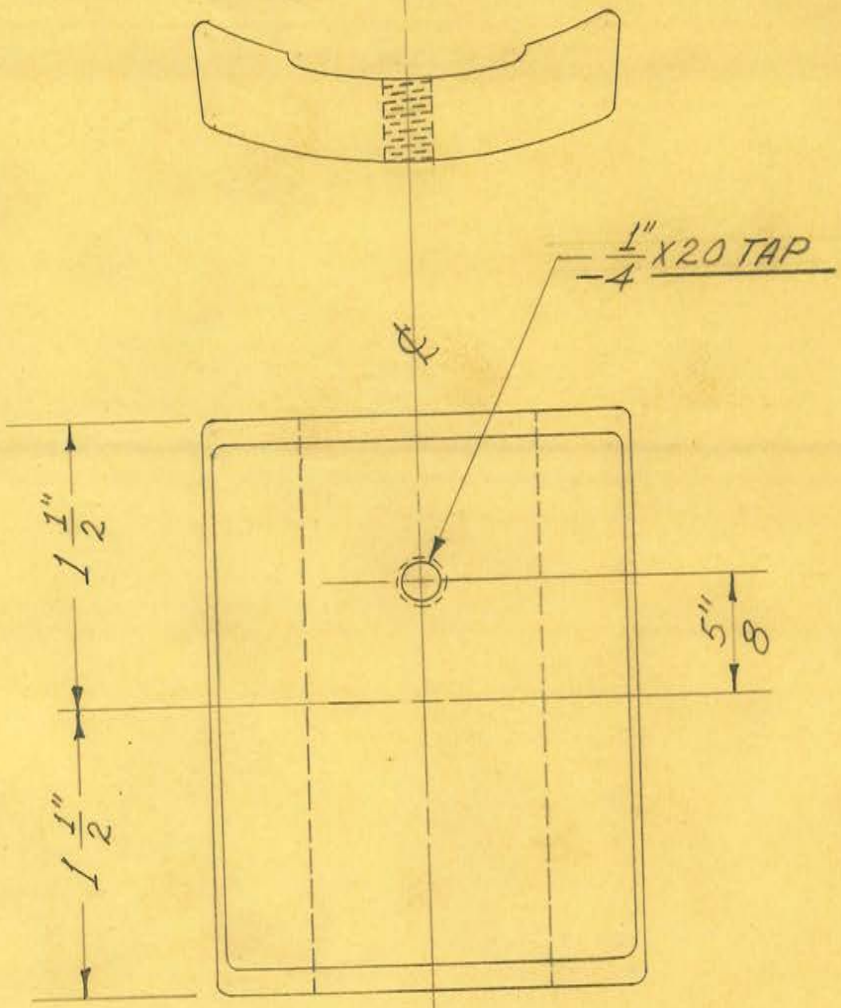


OBSOLETE

1 REQUIRED

| | | | |
|---|---|---|---|
| SIZE | | ISSUE 1-16-39 | J.W. |
| KIND | IRON CASTING | CHANGED | |
| SHAPE | | " | |
| FINISH | | " | |
| TEMP. | | " | |
| PATT. | 1262 | " | |

**TITLE:** FISCHER MOD. "GM" MOBILE UNIT BASE
UPRIGHT TUBE CLAMP BLOCK

H. G. FISCHER & CO.
2335 WABANSIA AVE.
CHICAGO, ILL.

CAT. NO.

PART NO. 12202F

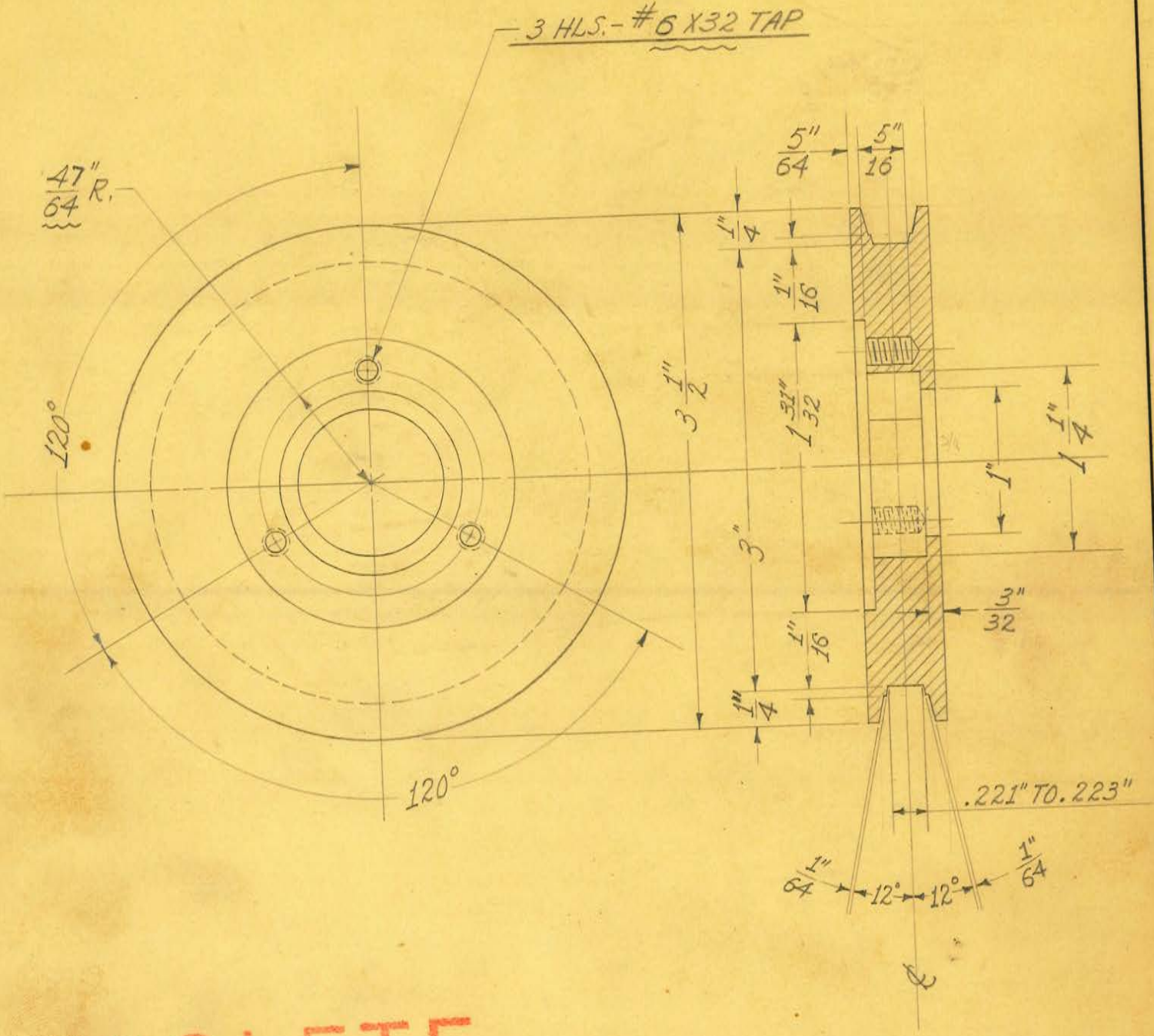


OBSOLETE

2 REQUIRED

| | | | |
|---|---|---|---|
| SIZE | | ISSUE 9-7-38 | J.W. |
| KIND | ALUM. CASTING | CHANGED | |
| SHAPE | | " | |
| FINISH | | " | |
| TEMP. | | " | |
| PATT. | 1265 | " | |

**TITLE:** FISCHER MOD. "GM" MOBILE UNIT COUNTERWEIGHT PULLEY

H. G. FISCHER & CO.
2338 WABANSIA AVE.
CHICAGO, ILL.

CAT. NO.

PART NO. 12204F

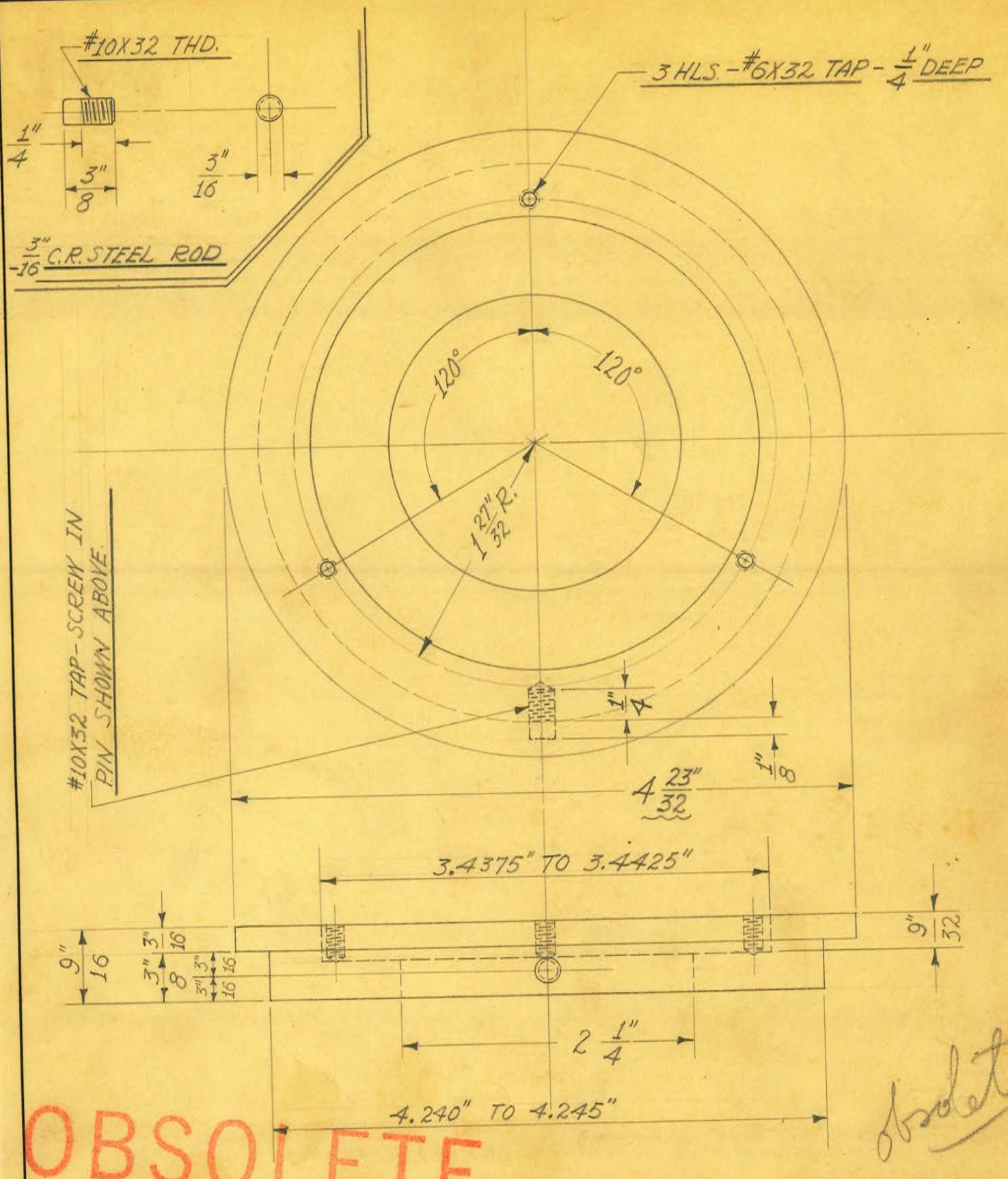


OBSOLETE

Obsolete

| | | | |
|---|---|---|---|
| SIZE | #214 | ISSUE 11-25-38 | J.W. |
| KIND | ALUM. CASTING | CHANGED | |
| SHAPE | | " | |
| FINISH | | " | |
| TEMP. | | " | |
| PATT. | 1267 | " | |

**TITLE:** FISCHER MOD. "GM" MOBILE UNIT - INNER TUBE CAP & BEARING SUPPORT

H. G. FISCHER & CO.
2335 WABANSIA AVE.
CHICAGO, ILL.

CAT. NO.

PART NO. 12208G

| REVISION | | DATE | BY |
|---|---|---|---|
| A | C'BORING. ADDED | 5-18-51 | J.V.W. |

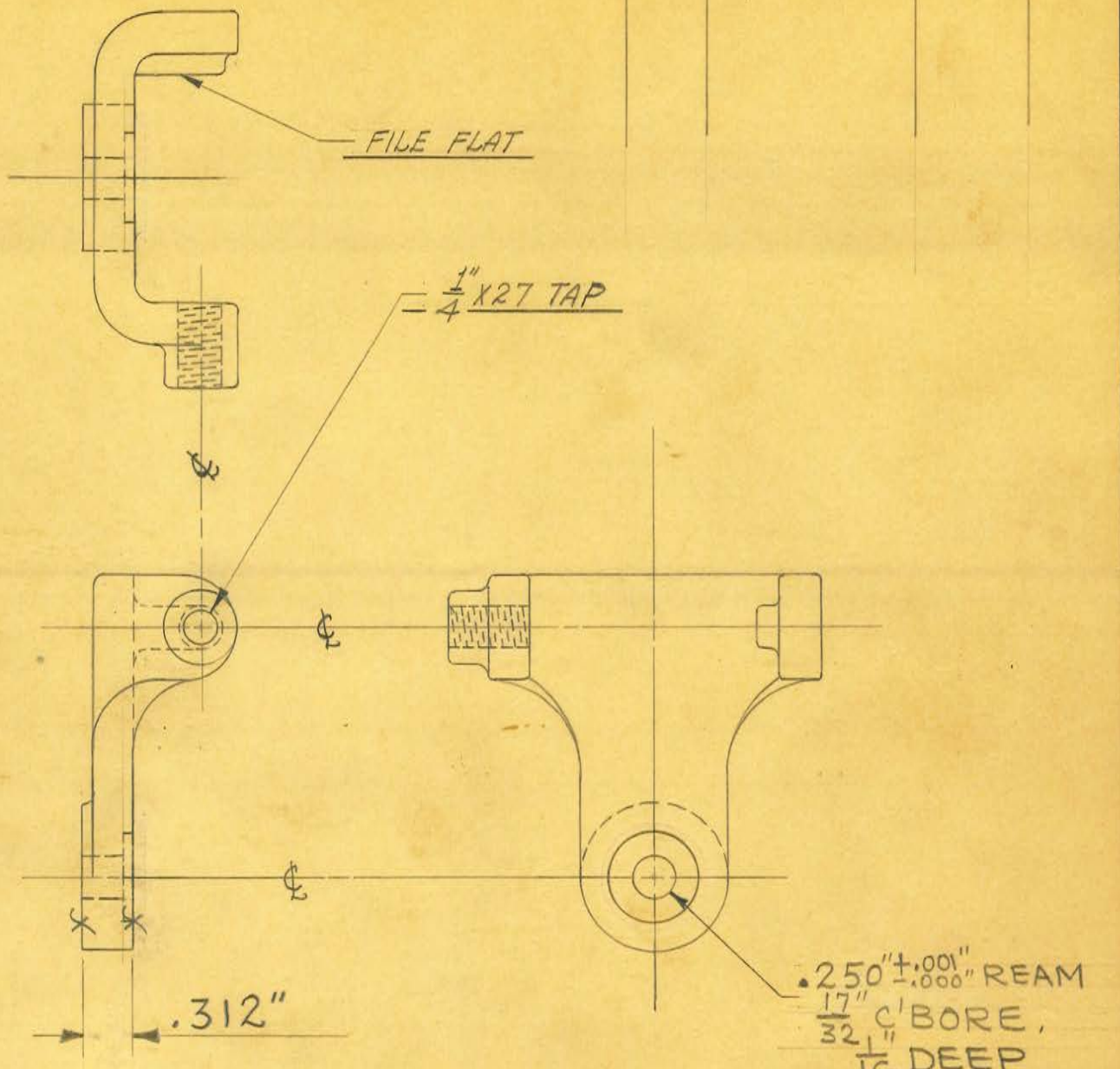


OBSOLETE

1 REQUIRED

| | | | | |
|---|---|---|---|---|
| SIZE | #214 | ISSUE 11-25-38 | J.W. | **TITLE:** FISCHER MOD. "GM" MOBILE UNIT – SLIDE LOCK |
| KIND | ALUM. CASTING | CHANGED | | |
| SHAPE | | " 6-19-46 | J.V.W. | |
| FINISH | PAINTED | " | | |
| TEMP. | | " | | |
| PATT. | 1272 | " | | |

| | | |
|---|---|---|
| H. G. FISCHER & CO. 2335 WABANSIA AVE. CHICAGO, ILL. | CAT. NO. | PART NO. 12213FA |

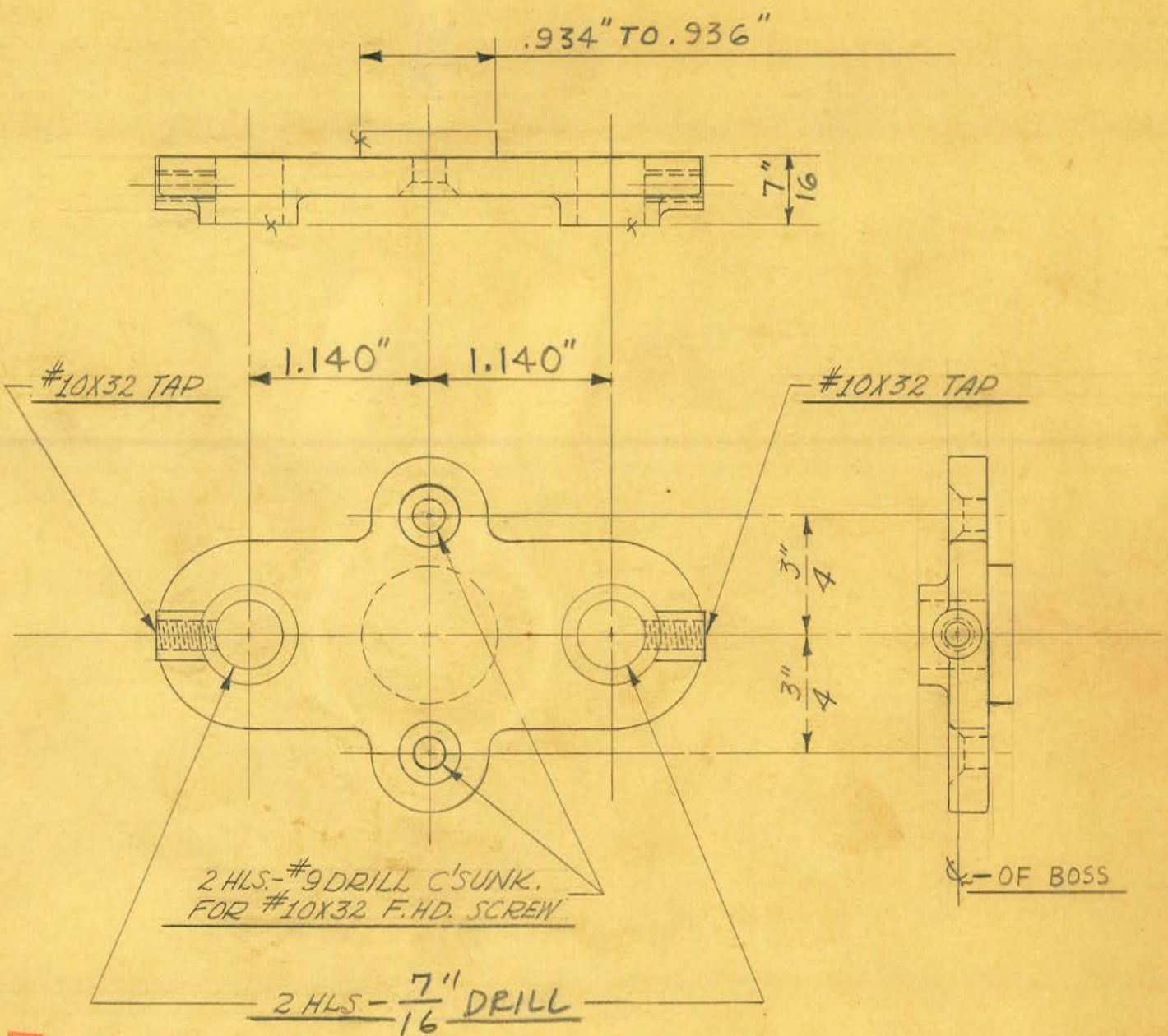


OBSOLETE

1 REQUIRED

| | | | |
|---|---|---|---|
| SIZE | #214 | ISSUE 12-5-38 | J.W. |
| KIND | ALUM. CASTING | CHANGED | |
| SHAPE | | " 6-19-46 | J.V.W. |
| FINISH | PAINTED | " | |
| TEMP. | | " | |
| PATT. | 1274 | " | |

**TITLE:** FISCHER MOD. "GM" MOBILE UNIT - GUIDE ROLLER SUPPORT

H. G. FISCHER & CO.
2335 WABANSIA AVE.
CHICAGO, ILL.

CAT. NO.

PART NO. 12215F

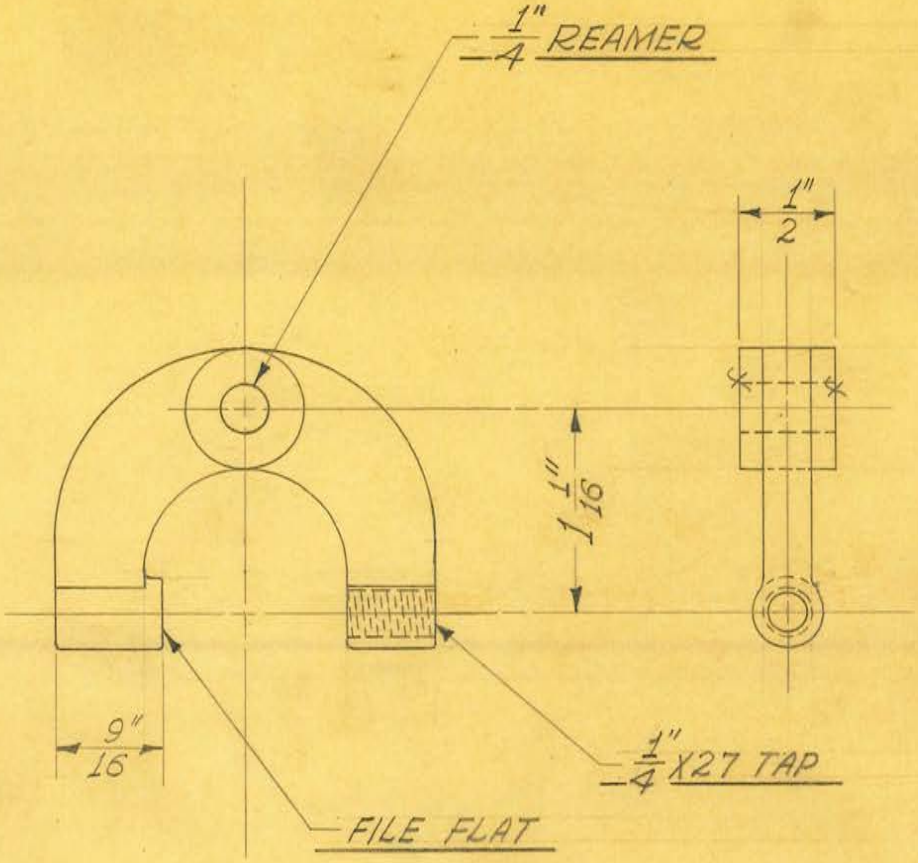


1 REQUIRED

OBSOLETE

| | | | |
|---|---|---|---|
| SIZE | # 214 | ISSUE 11-10-38 | J.W. |
| KIND | ALUM. CASTING | CHANGED | |
| SHAPE | | " | |
| FINISH | POL. & BUFF | " | |
| TEMP. | | " | |
| PATT. | 1276 | " | |

**TITLE:** FISCHER MOD. "GM" MOBILE UNIT - TRANSFORMER SWIVEL SUPPORT - SLIDE LOCK

H. G. FISCHER & CO.
2335 WABANSIA AVE.
CHICAGO, ILL.

CAT. NO.

PART NO. 12217F

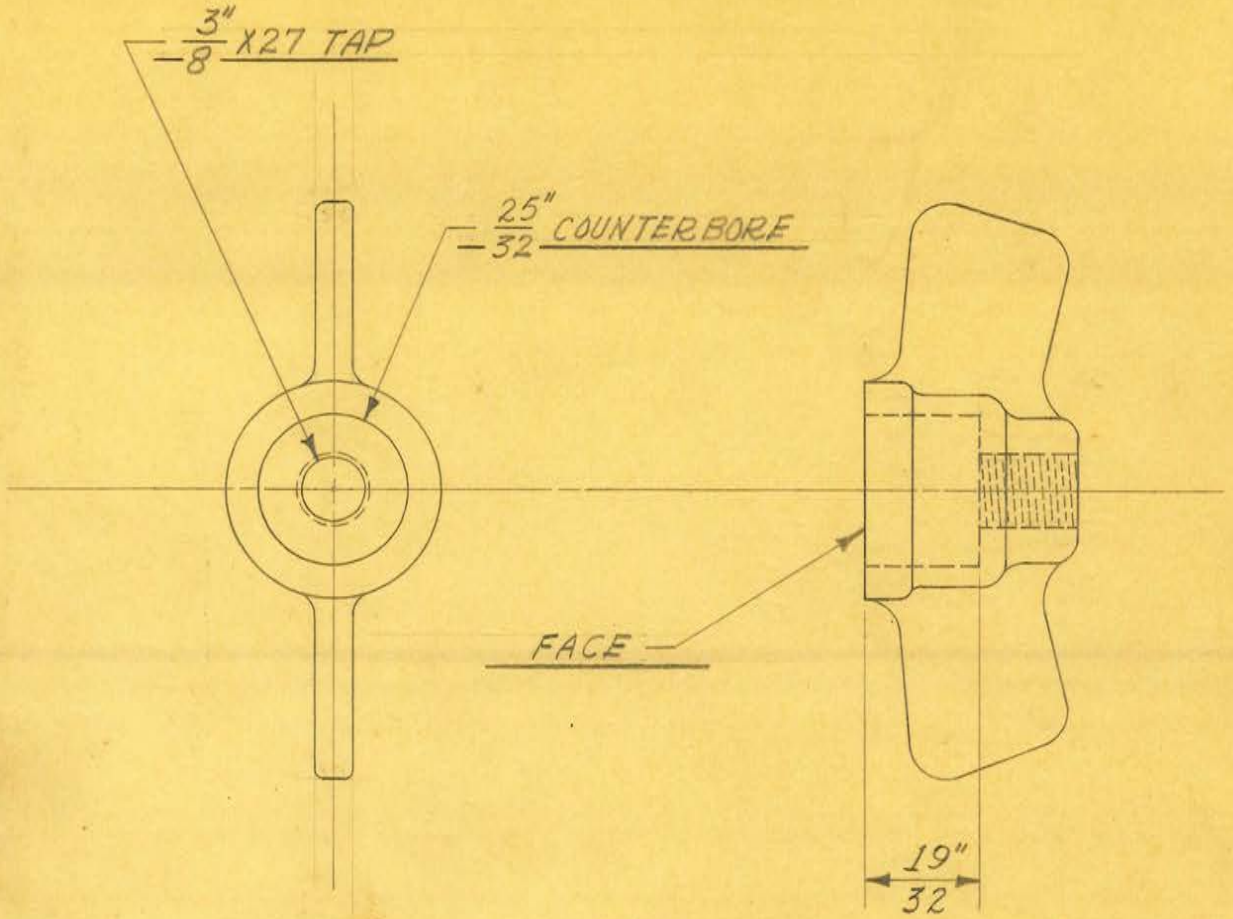


1 REQUIRED

OBSOLETE

| | | | |
|---|---|---|---|
| SIZE | #214 | ISSUE 11-10-38 | J.W. |
| KIND | ALUM. CASTING | CHANGED | |
| SHAPE | | " | |
| FINISH | PAINTED | " | |
| TEMP. | | " | |
| PATT. | 1282 | " | |

**TITLE:** FISCHER MOD. "GM" MOBILE UNIT TRANSFORMER SLIDE SWIVEL LOCK WING NUT

H. G. FISCHER & CO.
2338 WABANSIA AVE.
CHICAGO, ILL.

CAT. NO.

PART NO. 12219F

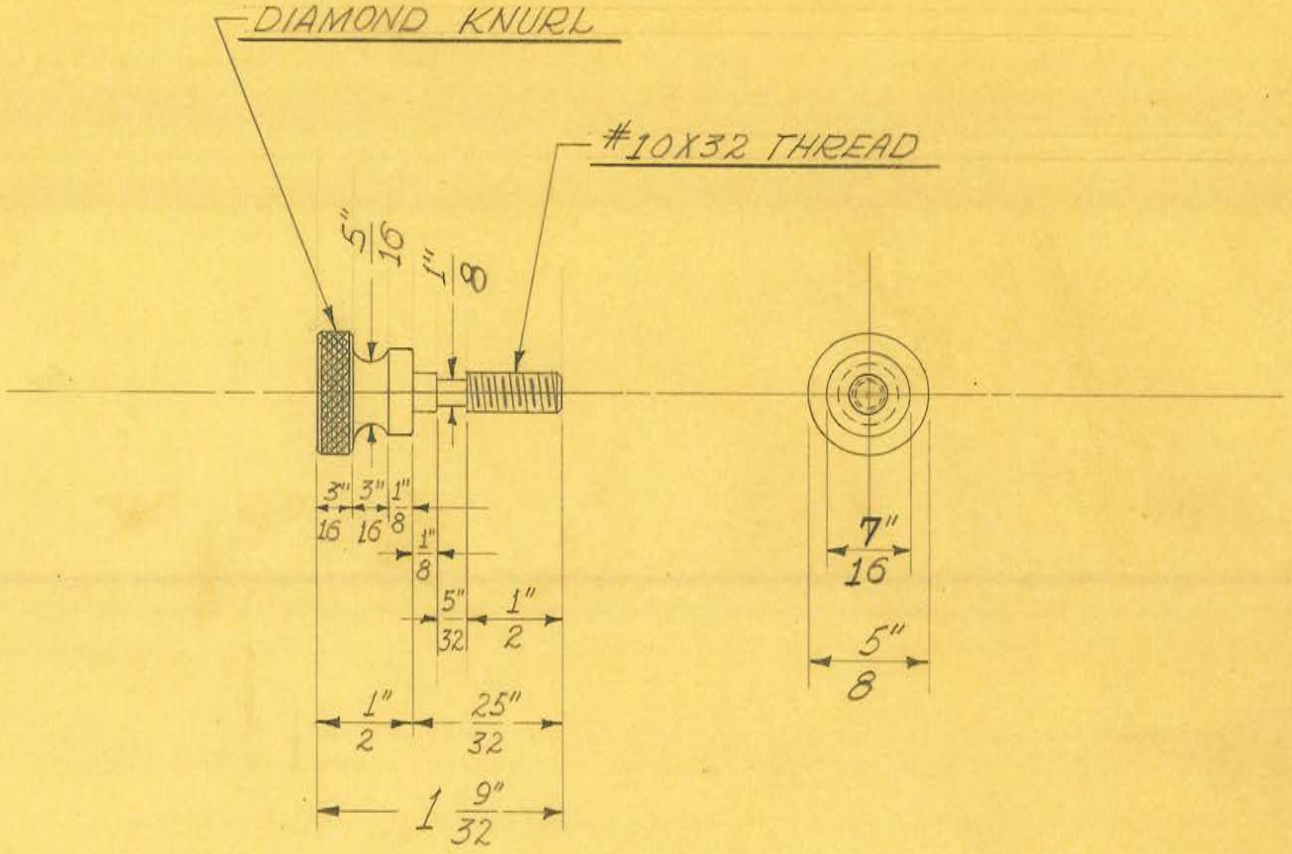


1 REQUIRED

OBSOLETE

| | | | | |
|---|---|---|---|---|
| SIZE | 5/8" DIAM. | ISSUE 12-6-38 | J.W. | TITLE: FISCHER MOD. "GM" MOBILE UNIT - STEREOSCOPIC SHIFT SCALE SUPPORT THUMB SCREW |
| KIND | BRASS ROD | CHANGED | | |
| SHAPE | | " | | |
| FINISH | CHROME #2 | " | | |
| TEMP. | | " | | |
| PATT. | | " | | |

H. G. FISCHER & CO.
2335 WABANSIA AVE.
CHICAGO, ILL.

CAT. NO.

PART NO. 12224

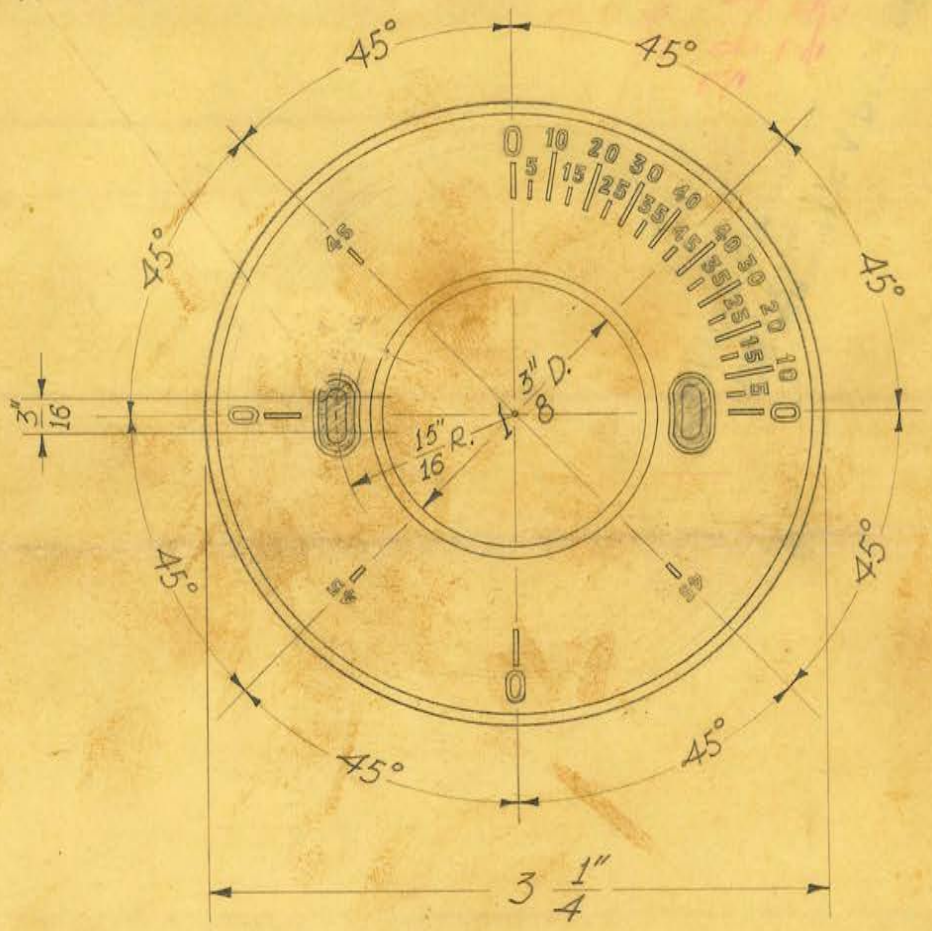


OBSOLETE

| | | | |
|---|---|---|---|
| SIZE | | ISSUE | |
| KIND | | CHANGED | |
| SHAPE | | " | |
| FINISH | chrome | " | |
| TEMP. | | " | |
| PATT. | | " | |

**TITLE:** FISCHER MODEL GM MOBILE UNIT ANGLE REGULATOR PLATE

H. G. FISCHER & CO.
2335 WABANSIA AVE.
CHICAGO, ILL.

CAT. NO.

PART NO. 12227

PUNCH 2 SLOTS WITH
PERFORATING DIE #6953

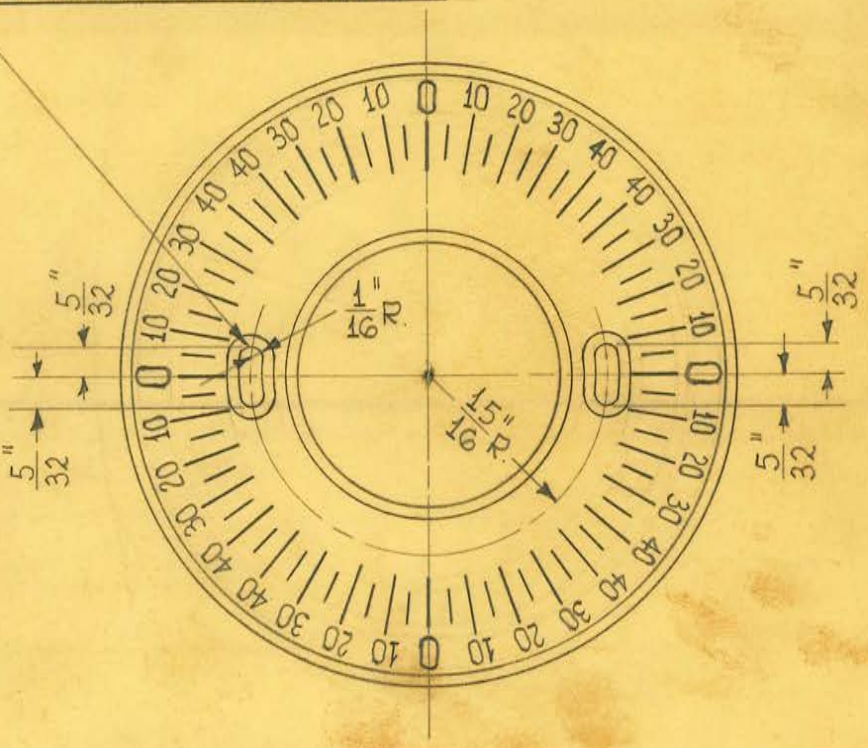


2 REQUIRED

OBSOLETE

| | | | |
|---|---|---|---|
| SIZE | FROM 12227 | ISSUE 5-1-45 | HE. |
| KIND | | CHANGED | |
| SHAPE | | " | |
| FINISH | | " | |
| TEMP. | | " | |
| PATT. | | " | |

**TITLE:** FISCHER MOD. "GM" MOBILE UNIT - ANGLE REGULATOR PLATE

H. G. FISCHER & CO.
2338 WABANSIA AVE.
CHICAGO. ILL.

CAT. NO.

PART NO. 12227F

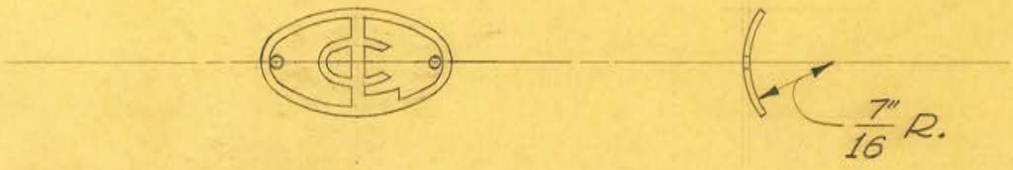


1 REQUIRED

OBSOLETE

Obsolete

| | | | |
|---|---|---|---|
| SIZE | | ISSUE 12-21-38 | J.W. |
| KIND | FROM 12228 | CHANGED | |
| SHAPE | | " | |
| FINISH | | " | |
| TEMP. | | " | |
| PATT. | | " | |

**TITLE:** FISCHER MOD. "GM" MOBILE UNIT CENTER LINE INDICATOR

H. G. FISCHER & CO.
2335 WABANSIA AVE.
CHICAGO, ILL.

CAT. NO.

PART NO. 12228F

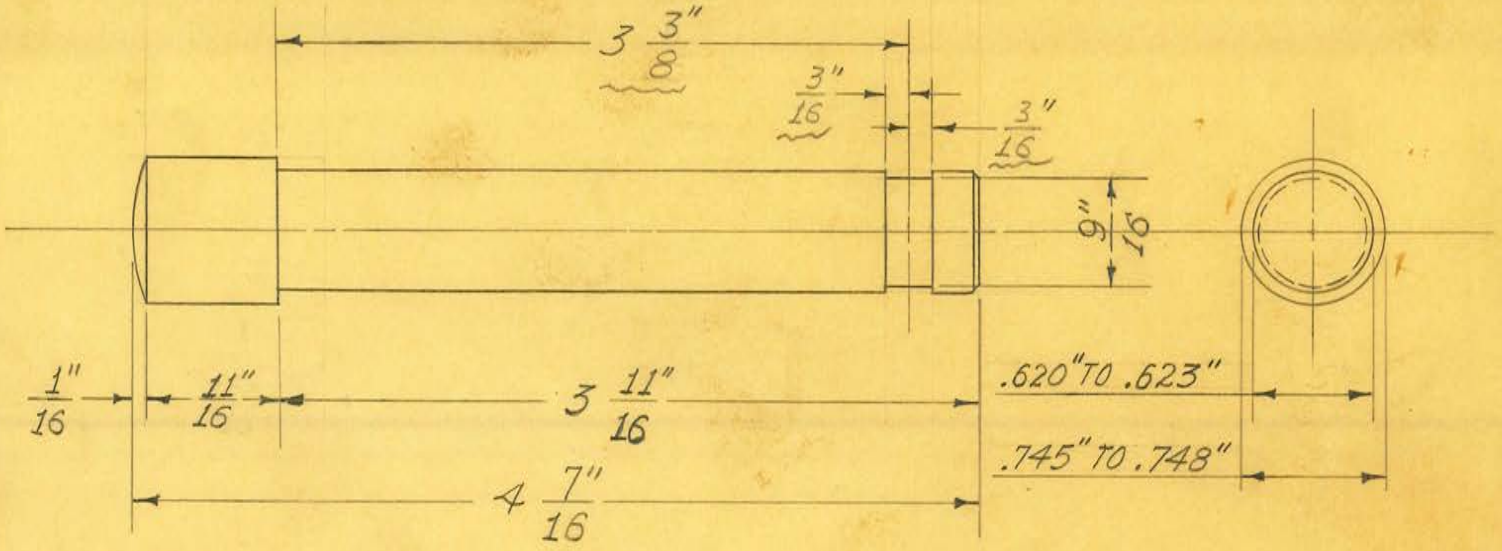


2 REQUIRED

OBSOLETE

| | | | | |
|---|---|---|---|---|
| SIZE | 3/4" DIAM. | ISSUE 1-16-39 | J.W. | TITLE: FISCHER MOD. "GM" MOBILE UNIT RUBBER ROLLER SHAFT |
| KIND | C.R. STEEL | CHANGED 8-23-39 | J.W. | |
| SHAPE | | " | | |
| FINISH | CHROME #2 ROUNDED END | " | | |
| TEMP. | | " | | |
| PATT. | | " | | |

H. G. FISCHER & CO.
2335 WABANSIA AVE.
CHICAGO, ILL.

CAT. NO.

PART NO. 12236

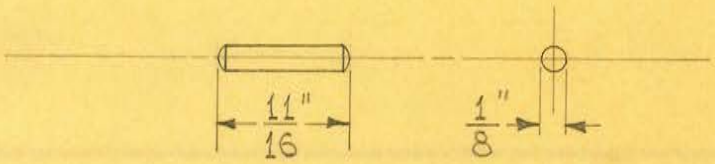


2 REQUIRED

OBSOLETE

| | | | |
|---|---|---|---|
| SIZE | 1/8" | ISSUE 2-13-39 | HE. |
| KIND | C.R. STEEL | CHANGED | |
| SHAPE | | " | |
| FINISH | CAD. #23 | " | |
| TEMP. | | " | |
| PATT. | | " | |

**TITLE:** FISCHER MOD. "GM" MOBILE UNIT - STEREOSCOPIC SHIFT SCALE SUPPORT PIN

H. G. FISCHER & CO.
2335 WABANSIA AVE.
CHICAGO, ILL.

CAT. NO.

PART NO. 12238 1/2

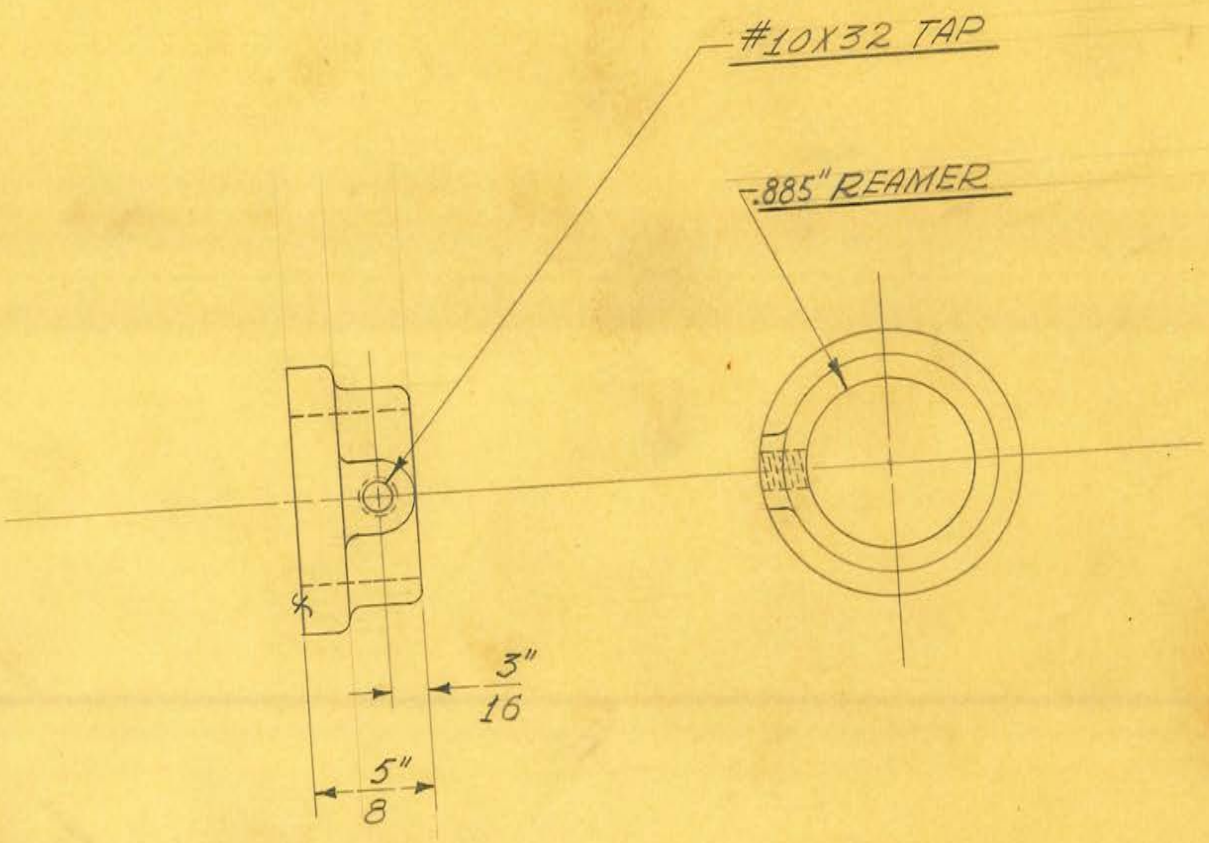


2 REQUIRED

OBSOLETE

| | | | |
|---|---|---|---|
| SIZE | #12 | ISSUE 12-7-38 | J.W. |
| KIND | ALUM. CASTING | CHANGED | |
| SHAPE | | " | |
| FINISH | POL. & BUFF | " | |
| TEMP. | | " | |
| DATE | 1289 | " | |

TITLE: FISCHER MOD. "GM" MOBILE UNIT
STEREOSCOPIC SHIFT REGULATING COLLAR

H. G. FISCHER & CO.
2335 WABANSIA AVE.
CHICAGO, ILL.

CAT. NO.

PART NO. 12239F

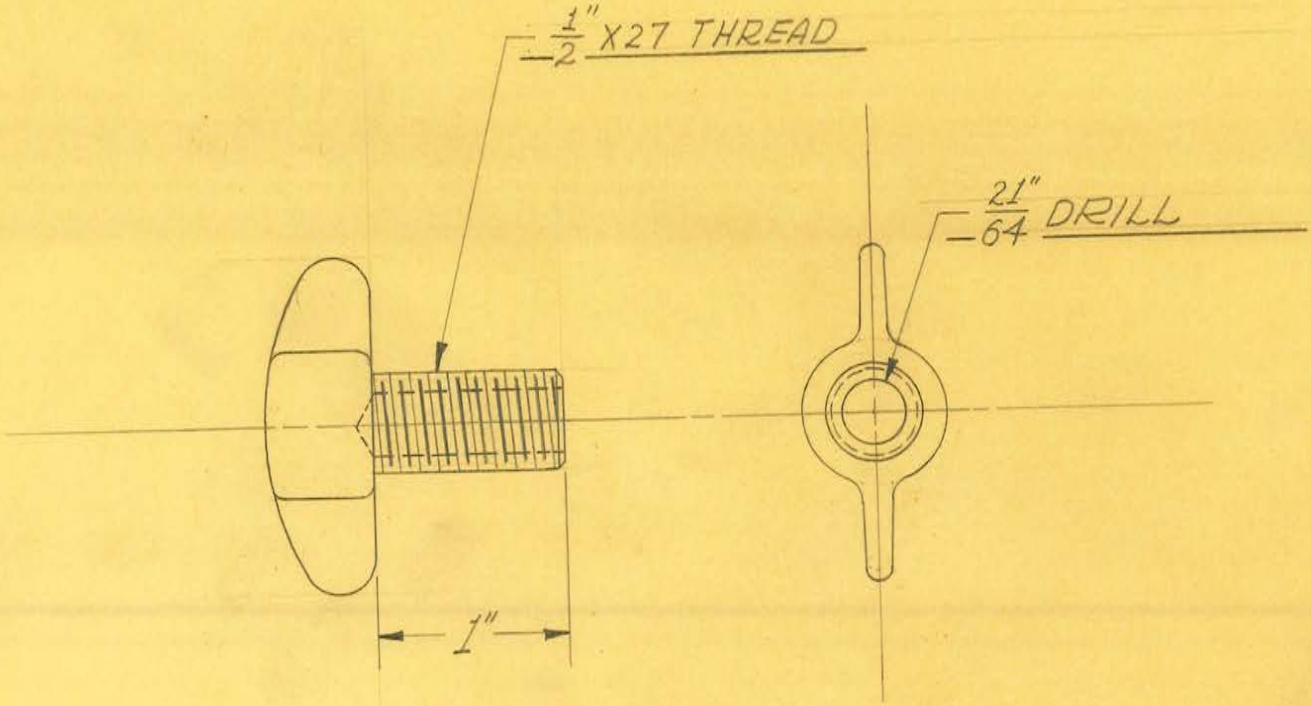


1 REQUIRED

OBSOLETE

| | | | | |
|---|---|---|---|---|
| SIZE | | ISSUE 11-9-38 | J.W. | TITLE: FISCHER MOD. "GM" MOBILE UNIT UPRIGHT TUBE CLAMP WING SCREW |
| KIND | BRASS CASTING | CHANGED | | |
| SHAPE | | " | | |
| FINISH | CAD. #23 | " | | |
| TEMP. | | " | | |
| PATT. | 1297 | " | | |

H. G. FISCHER & CO.
2335 WABANSIA AVE.
CHICAGO, ILL.

CAT. NO.

PART NO. 12242F

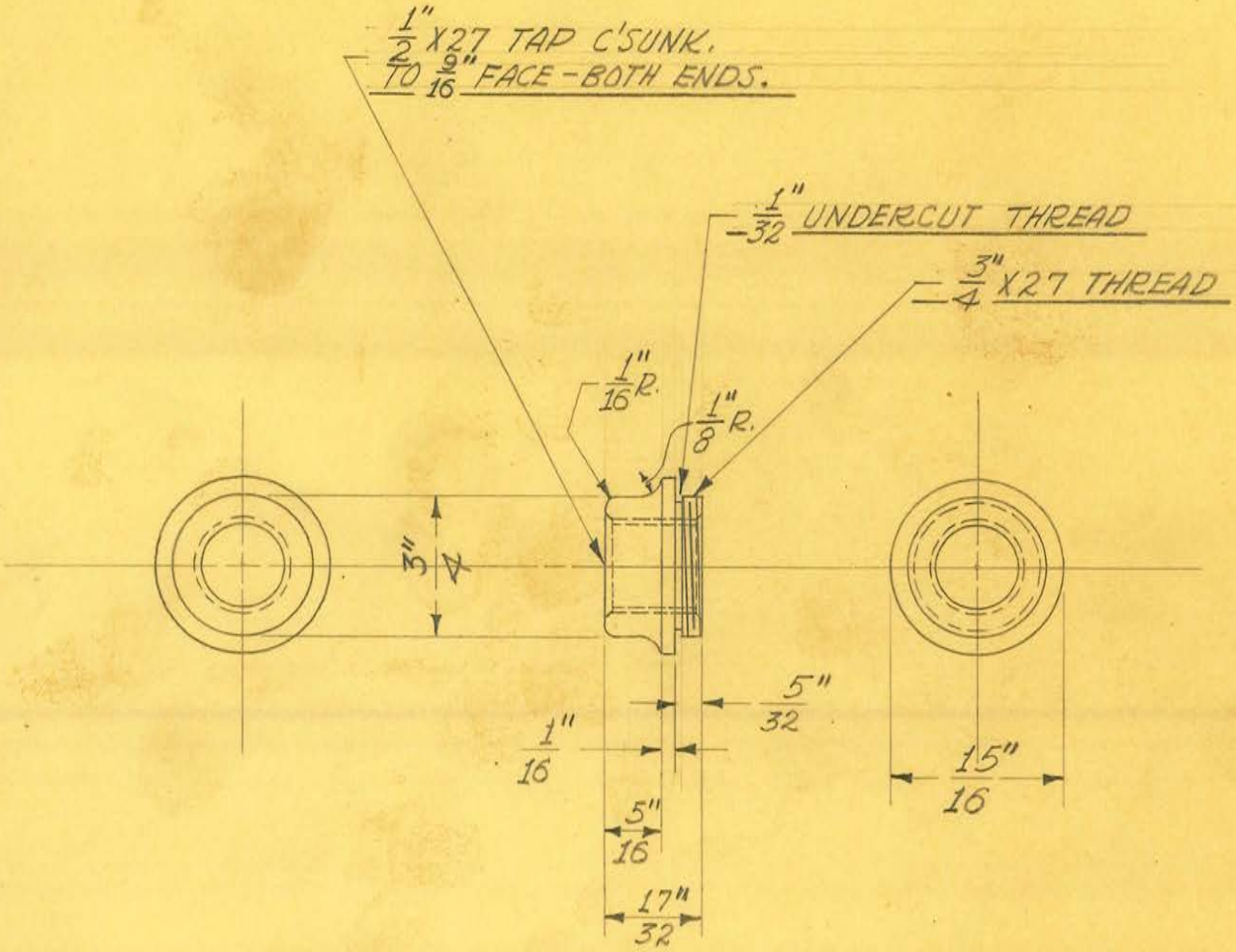


1 REQUIRED

OBSOLETE

| | | | | |
|---|---|---|---|---|
| SIZE | 15/16" DIAM. | ISSUE 11-8-38 | J.W. | TITLE: FISCHER MOD. "GM" MOBILE UNIT UPRIGHT TUBE CLAMP BUSHING |
| KIND | C.R. STEEL | CHANGED | | |
| SHAPE | ROD | " | | |
| FINISH | | " | | |
| TEMP. | | " | | |
| PATT. | | " | | |

H. G. FISCHER & CO.
2335 WABANSIA AVE.
CHICAGO, ILL.

CAT. NO.

PART NO. 12243

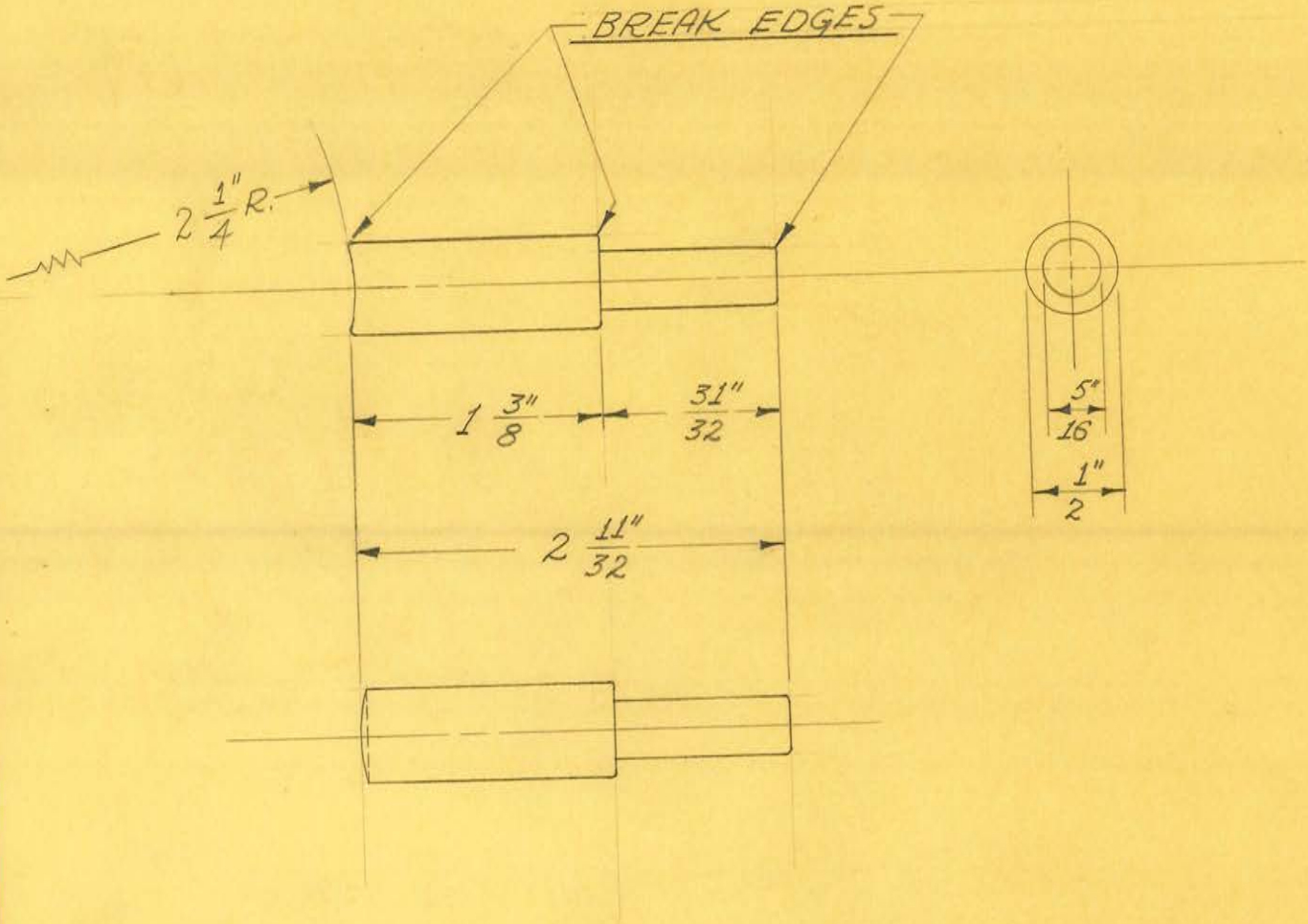


1 REQUIRED

OBSOLETE

| | | | |
|---|---|---|---|
| SIZE | 1/2" DIAM. | ISSUE 2-3-39 | J.W. |
| KIND | BRONZE ROD | CHANGED | |
| SHAPE | | " | |
| FINISH | | " | |
| TEMP. | | " | |
| PATT. | | " | |

**TITLE:** FISCHER MOD. "GM" MOBILE UNIT
UPRIGHT TUBE CLAMP SHAFT

H. G. FISCHER & CO.
2335 WABANSIA AVE.
CHICAGO, ILL.

CAT. NO.

PART NO. 12244

INSERT INDICATOR IN SLOT & ALIGN. USING HOLE IN WASHER AS GUIDE DRILL THRU WITH 1/16" DRILL. INSERT 1/16" MONEL METAL ROD & RIVET BOTH ENDS.

PCE. #12246

1/16" MONEL METAL ROD

PCE. #12247

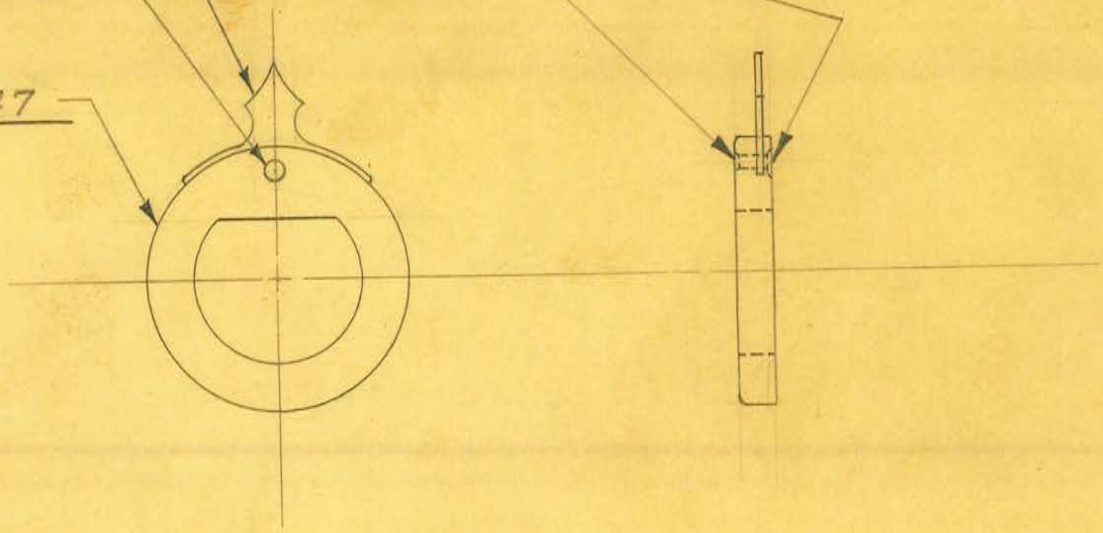

2 REQUIRED

OBSOLETE

| | | | |
|---|---|---|---|
| SIZE | | ISSUE 11-10-38 | J.W. |
| KIND | | CHANGED | |
| SHAPE | | " | |
| FINISH | | " | |
| TEMP. | | " | |
| PATT. | | " | |

**TITLE:** FISCHER MOD. "GM" MOBILE UNIT TRANSFORMER SLIDE SWIVEL SUPP. STUD "D" WASHER & INDICATOR ASSEM.

H. G. FISCHER & CO.
2335 WABANSIA AVE.
CHICAGO, ILL.

CAT. NO.

PART NO. 12245G

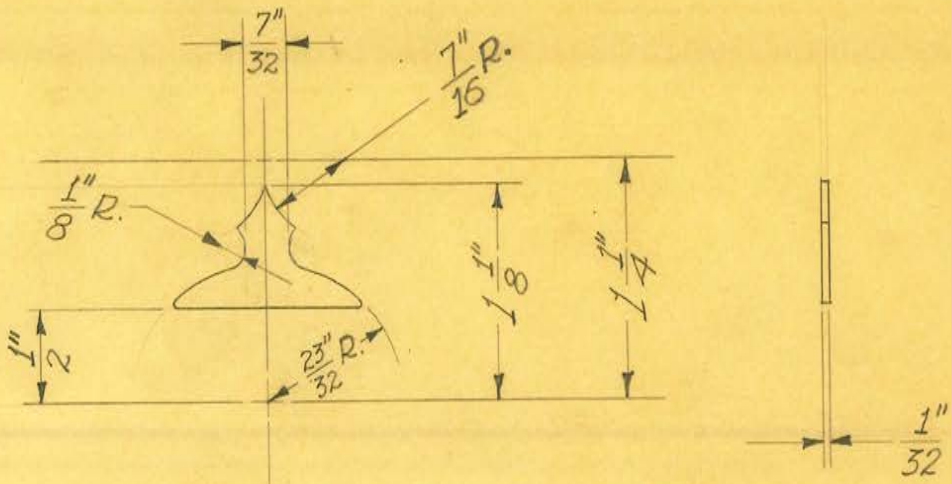


2 REQUIRED

OBSOLETE

| | | | | |
|---|---|---|---|---|
| SIZE | 1/32" SHEET | ISSUE 11-10-38 | J.W. | TITLE: FISCHER MOD. "GM" MOBILE UNIT TRANSFORMER SLIDE SWIVEL ANGLE INDICATOR |
| KIND | BRASS | CHANGED | | |
| SHAPE | | " | | |
| FINISH | SATIN CHR. #4 | " | | |
| TEMP. | | " | | |
| PATT. | | " | | |

H. G. FISCHER & CO.
2335 WABANSIA AVE.
CHICAGO, ILL.

CAT. NO.

PART NO. 12246

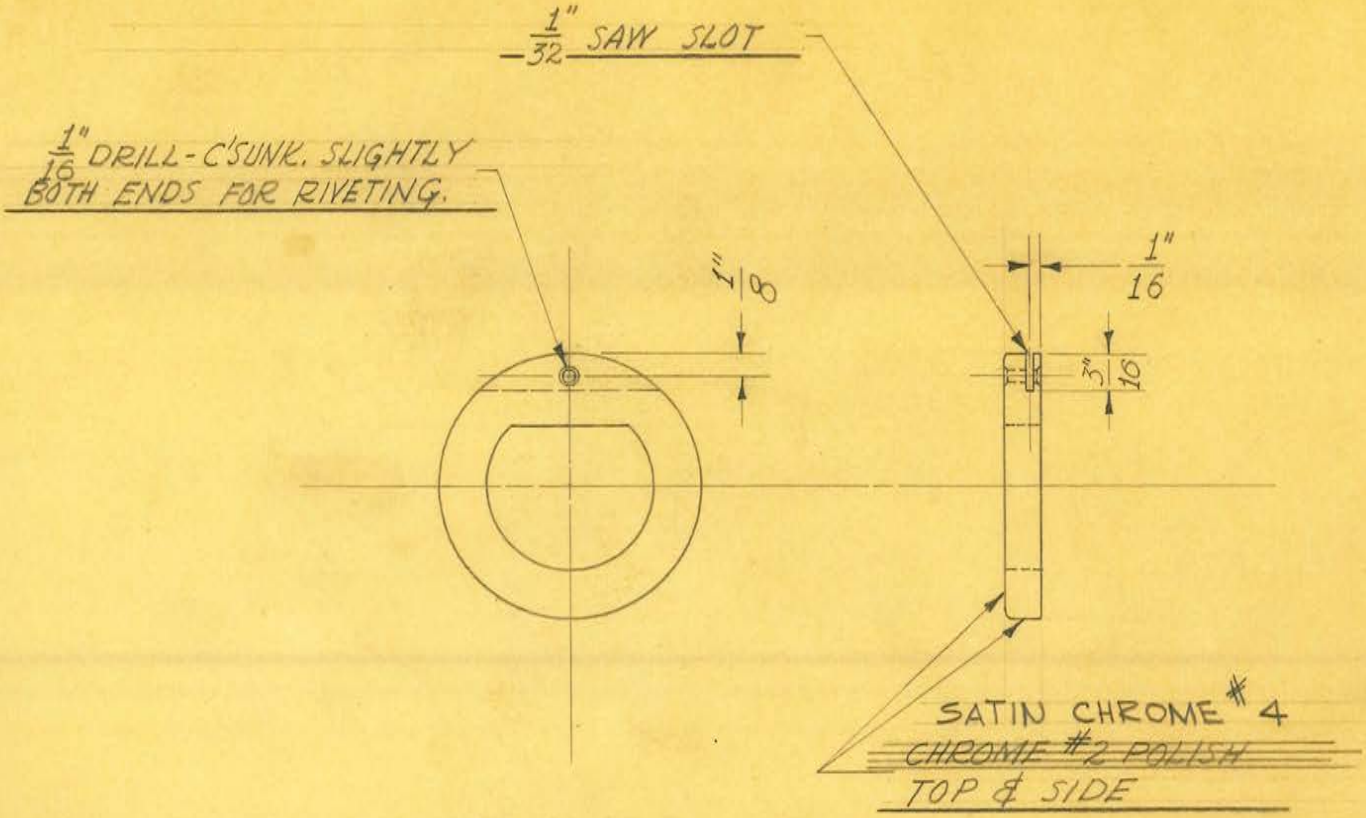


FROM # 11370

2 REQUIRED

OBSOLETE

| | | | |
|---|---|---|---|
| SIZE | | ISSUE 11-10-38 | J.W. |
| KIND | | CHANGED | |
| SHAPE | | " | |
| FINISH | SATIN CHR. #4 SEE NOTE | " | |
| TEMP. | | " | |
| PATT. | | " | |

**TITLE:** FISCHER MOD. "GM" MOBILE UNIT TRANSFORMER SLIDE SWIVEL SUPPORT STUD "D" WASHER

H. G. FISCHER & CO.
2335 WABANSIA AVE.
CHICAGO, ILL.

CAT. NO.

PART NO. 12247

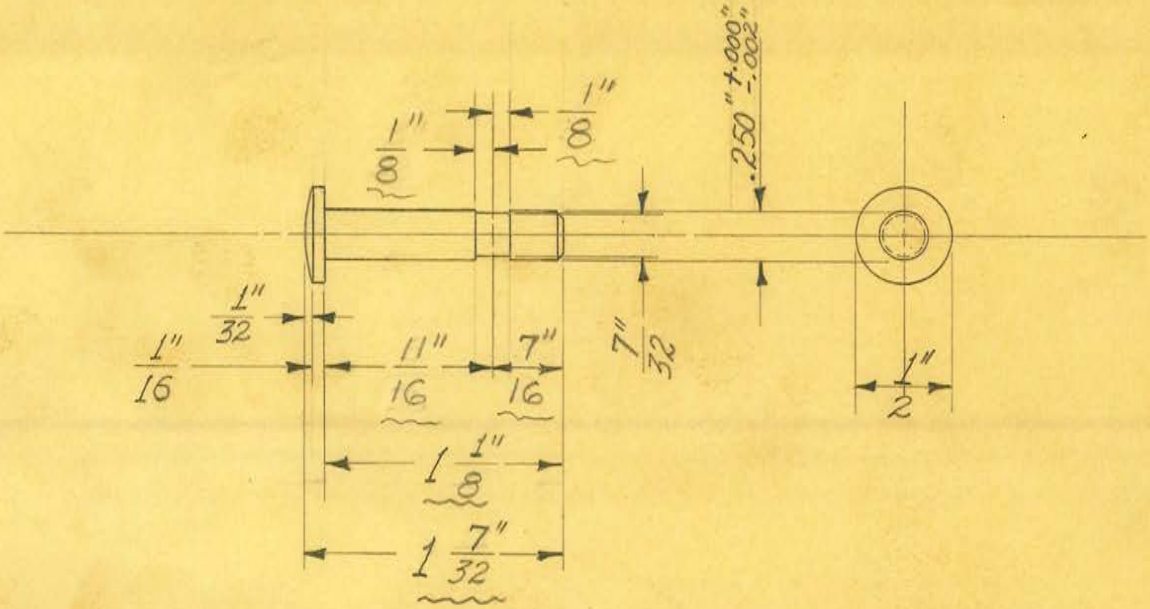


2 REQUIRED

5-21-51

OBSOLETE

| | | | | |
|---|---|---|---|---|
| SIZE | 1/2" DIAM. | ISSUE 11-10-38 | J.W. | TITLE: FISCHER MOD. "GM" MOBILE UNIT - TRANSFORMER SWIVEL SUPPORT - SLIDE LOCK - SHAFT |
| KIND | C.R. STEEL | CHANGED | | |
| SHAPE | ROD | " 6-19-46 | J.V.W. | |
| FINISH | CAD. #23 | " | | |
| TEMP. | | " | | |
| PATT. | | " | | |

H. G. FISCHER & CO.
2335 WABANSIA AVE.
CHICAGO, ILL.

CAT. NO.

PART NO. 12248

TITLE
FISCHER MOBILE BEDSIDE UNIT
TRANSF. SWIVEL SUPP. - SLIDE LOCK SHAFT

H. G. FISCHER & CO.
FRANKLIN PARK, ILLINOIS

PART NO. 12248A

DATE 5-18-51 | DR. BY J.V.W. | CH'K'D.

| REVISION | DATE | BY |
|---|---|---|
| | | |

PATTERN | FINISH WH. CHR. #3 | SCALE FULL

TOOLS | MATERIAL $\frac{1}{2}$" DIA. C.R. STEEL

DIMENSIONS UNLESS OTHERWISE SPECIFIED
FRACTIONAL ± .015
DECIMAL ± .005
ANGULAR ± ½°

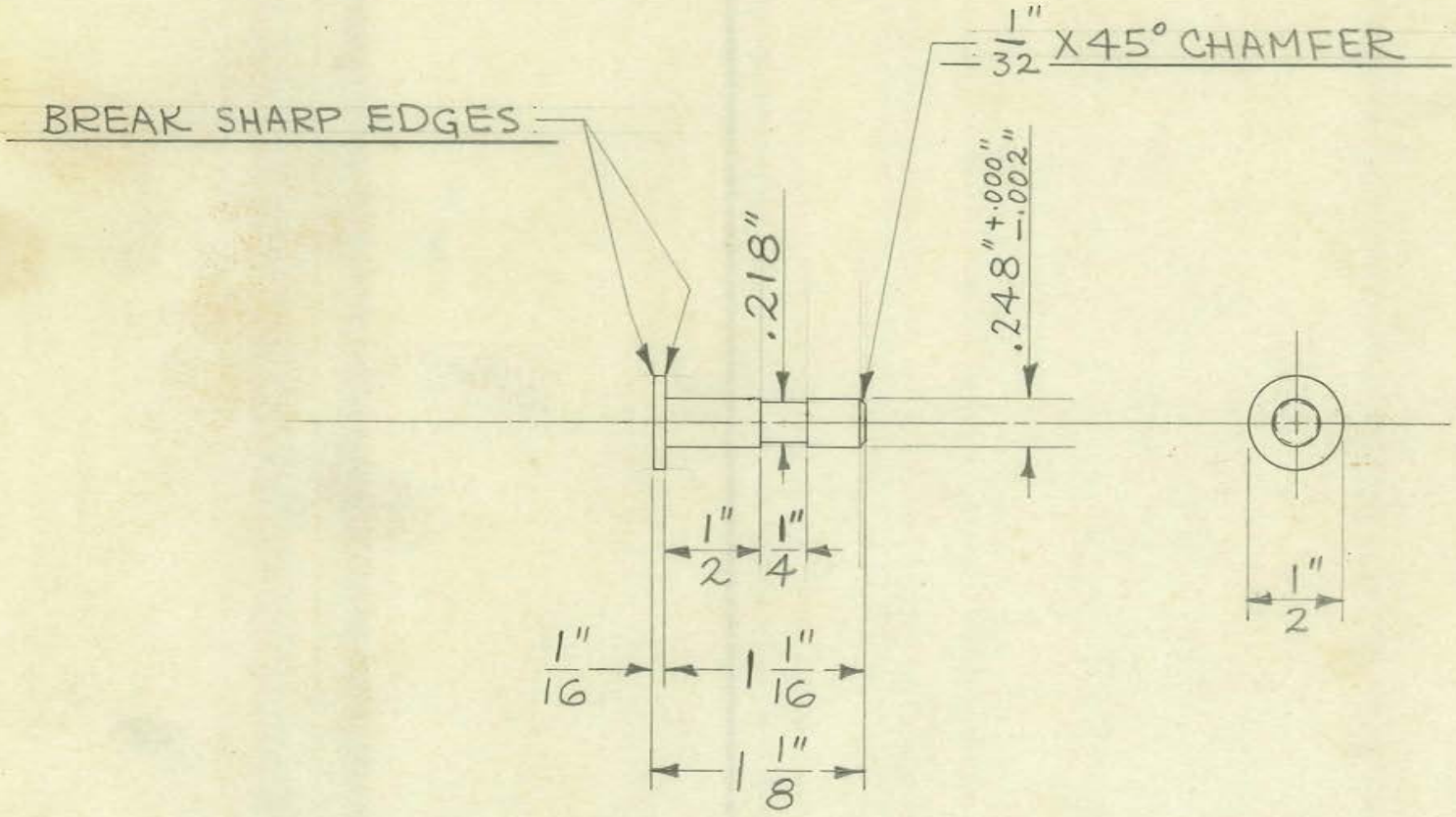


OBSOLETE

1 REQUIRED

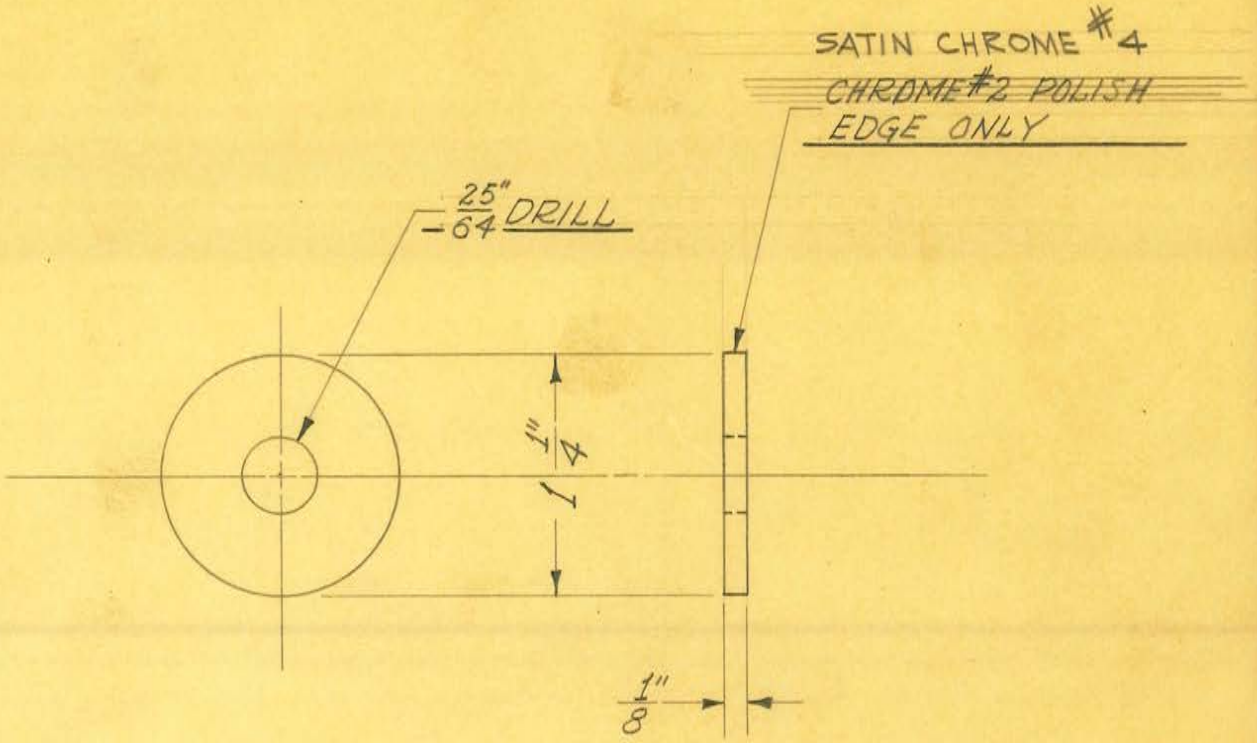


1 REQUIRED

OBSOLETE

| | | | | |
|---|---|---|---|---|
| SIZE | 1¾" DIAM. | ISSUE 11-10-38 | J.W. | TITLE: FISCHER MOD. "GM" MOBILE UNIT TRANSFORMER SLIDE SWIVEL SUPP. STUD WASHER |
| KIND | C.R. STEEL | CHANGED | | |
| SHAPE | | " | | |
| FINISH | SATIN CHR. #4 SEE NOTE | " | | |
| TEMP. | | " | | |
| PATT. | | " | | |

H. G. FISCHER & CO.
2335 WABANSIA AVE.
CHICAGO, ILL.

CAT. NO.

PART NO. 12249

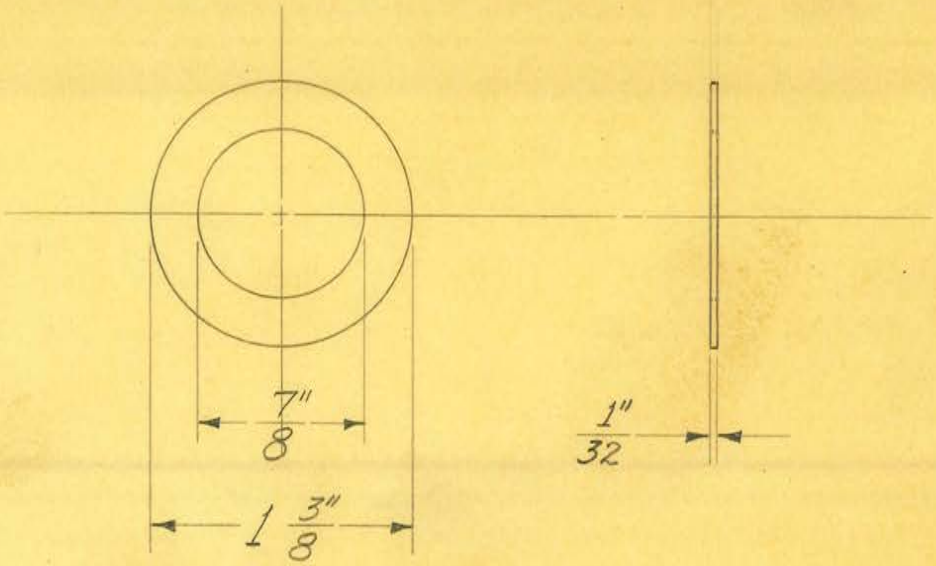


1 REQUIRED

OBSOLETE

| | | | |
|---|---|---|---|
| SIZE | 1/32" SHEET | ISSUE 11-10-38 | J.W. |
| KIND | BLACK FIBRE | CHANGED | |
| SHAPE | | " | |
| FINISH | | " | |
| TEMP. | | " | |
| PATT. | | " | |

**TITLE:** FISCHER MOD. "GM"
MOBILE UNIT TRANSFORMER SLIDE
SWIVEL LOCK FRICTION WASHER

H. G. FISCHER & CO.
2335 WABANSIA AVE.
CHICAGO, ILL.

CAT. NO.

PART NO. 12251

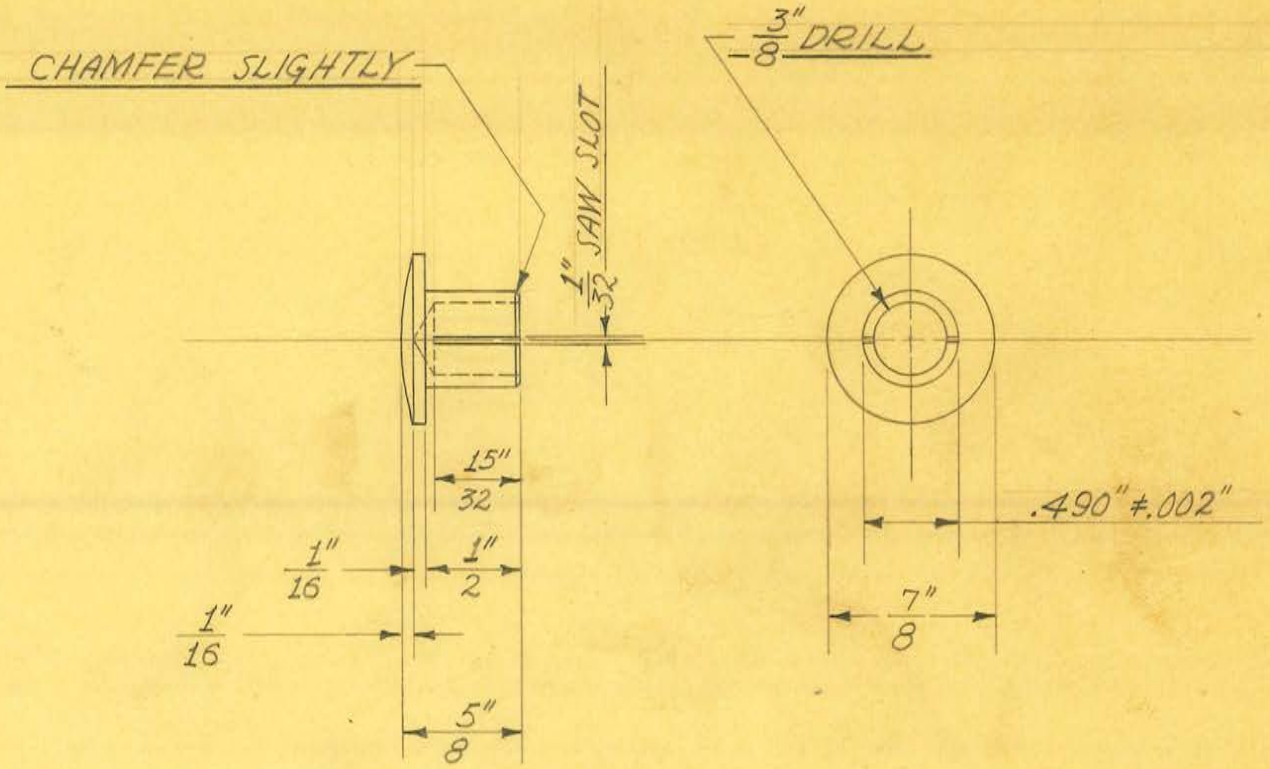


4 REQUIRED

OBSOLETE

| | | | |
|---|---|---|---|
| SIZE | 7/8" DIAM. | ISSUE 11-14-38 | J.W. |
| KIND | BRASS ROD | CHANGED | |
| SHAPE | | " | |
| FINISH | CHROME #2 POLISH HEAD ONLY | " | |
| TEMP. | | " | |
| PATT. | | " | |

**TITLE:** FISCHER MOD. "GM" MOBILE UNIT TRANSFORMER GUIDE RODS END CAP

H. G. FISCHER & CO.
2335 WABANSIA AVE.
CHICAGO, ILL.

CAT. NO.

PART NO. 12252

B & S. 47 T

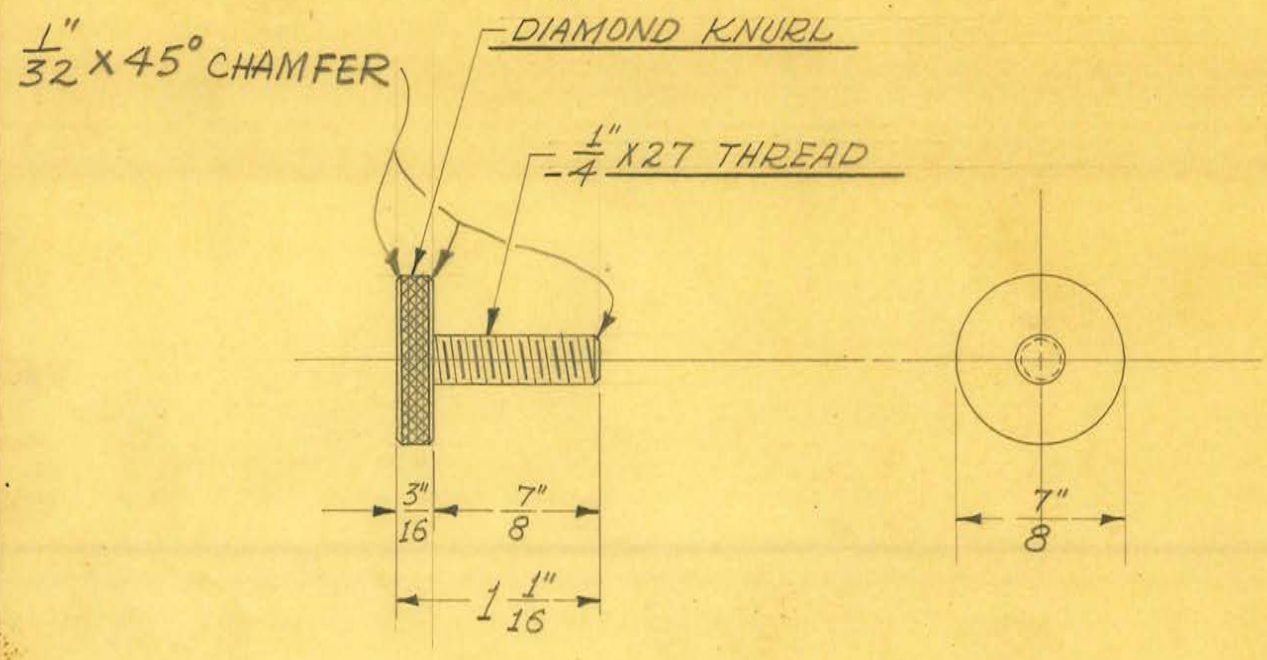


2 REQUIRED

OBSOLETE

| | | | | |
|---|---|---|---|---|
| SIZE | 7/8" DIAM. | ISSUE 11-14-38 | J.W. | TITLE: FISCHER MOD. "GM" MOBILE UNIT-TRANSFORMER SWIVEL SUPPORT-SLIDE LOCK THUMB SCREW |
| KIND | C.R. STEEL | CHANGED | | |
| SHAPE | ROD | " | | |
| FINISH | SATIN CHR. #4 | " | | |
| TEMP. | | " | | |
| PATT. | | " | | |

H. G. FISCHER & CO.
2335 WABANSIA AVE.
CHICAGO, ILL.

CAT. NO.

PART NO. 12253

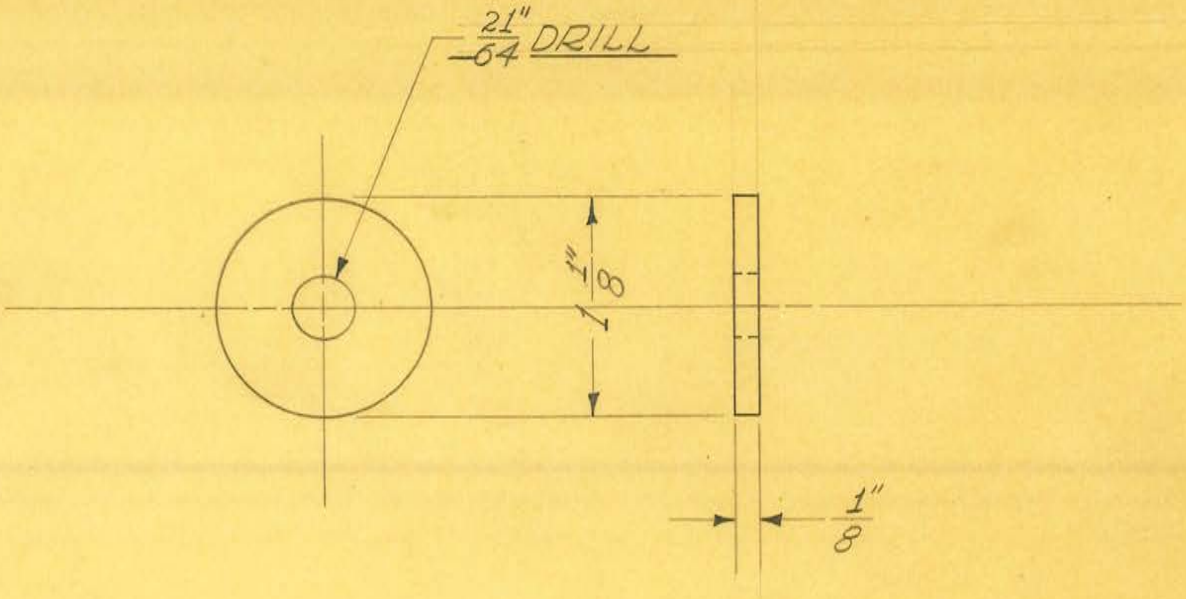


1 REQUIRED

OBSOLETE

| | | | |
|---|---|---|---|
| SIZE | 1 1/8" DIAM. | ISSUE 11-28-38 | J.W. |
| KIND | C.R. STEEL | CHANGED | |
| SHAPE | ROD | " | |
| FINISH | DU-LITE #8 | " | |
| TEMP. | | " | |
| PATT. | | " | |

**TITLE:** FISCHER MOD. "GM" MOBILE UNIT TRANSF. GUIDE RODS SWIVEL SUPPORT STUD CLAMP WASHER

H. G. FISCHER & CO.
2335 WABANSIA AVE.
CHICAGO, ILL.

CAT. NO.

PART NO. 12254

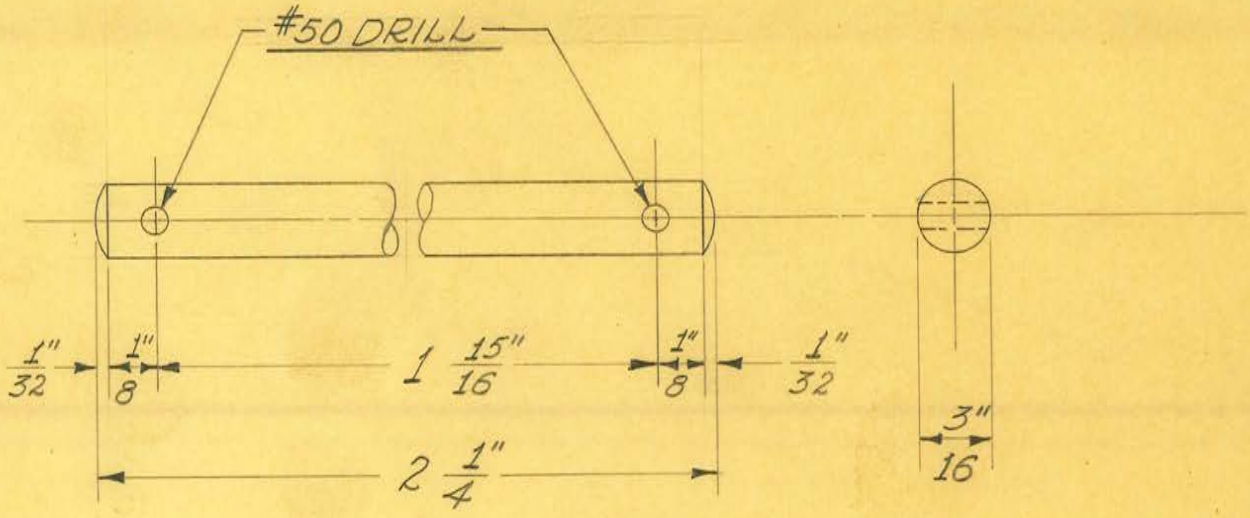


SCALE ÷ DOUBLE SIZE

1 REQUIRED

OBSOLETE

| | | | | |
|---|---|---|---|---|
| SIZE | 3/16" DIAM. | ISSUE 12-9-38 | J.W | TITLE: FISCHER. MOD. "GM" MOBILE UNIT - SLIDE - COUNTERWEIGHT CHAIN SHAFT |
| KIND | C.R. STEEL | CHANGED | | |
| SHAPE | | " | | |
| FINISH | CAD. #23 | " | | |
| TEMP. | | " | | |
| PATT. | | " | | |

H. G. FISCHER & CO.
2335 WABANSIA AVE.
CHICAGO, ILL.

CAT. NO.

PART NO. 12258

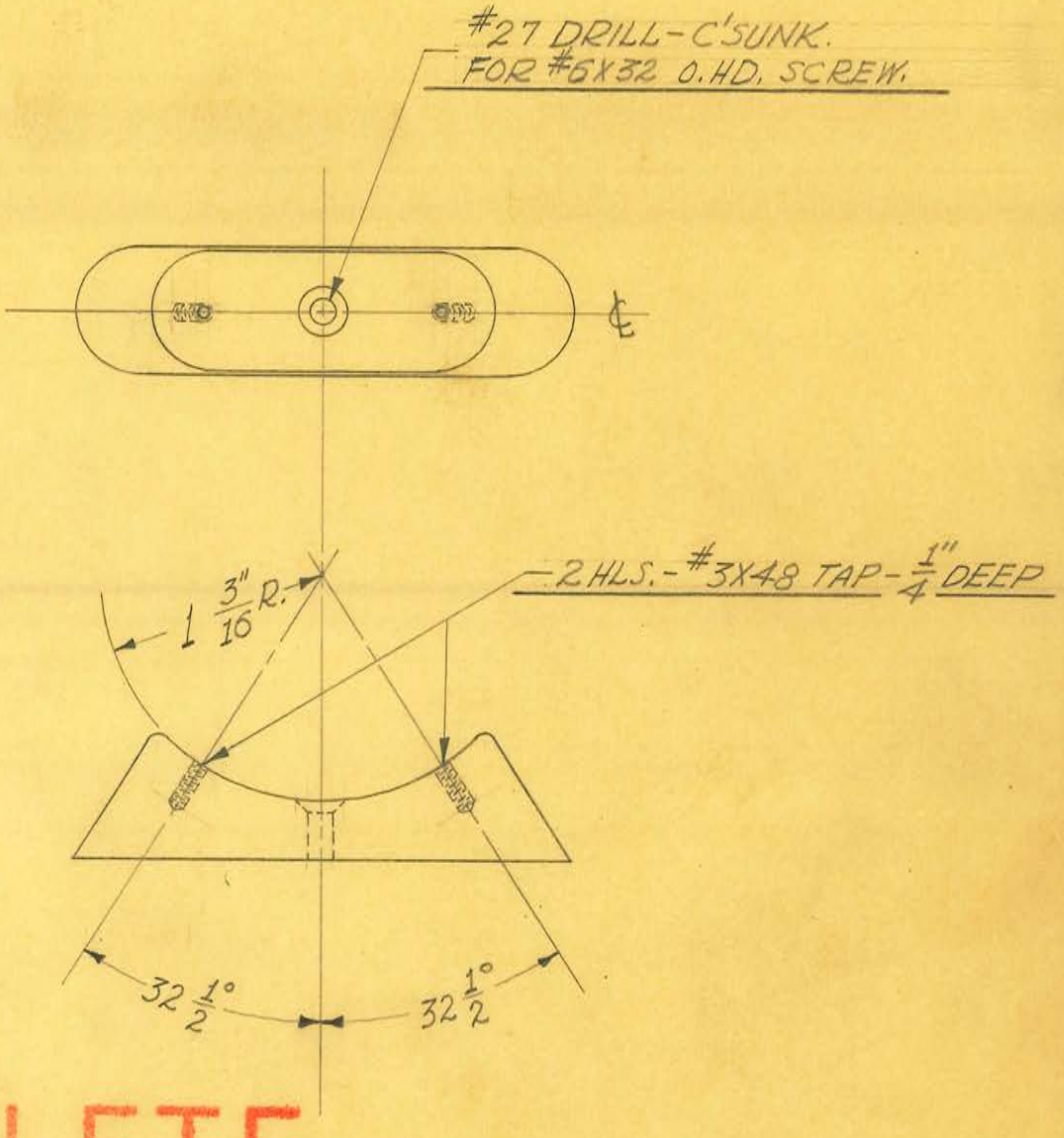


OBSOLETE

1 REQUIRED

| | | | |
|---|---|---|---|
| SIZE | #12 | ISSUE 12-14-38 | J.W. |
| KIND | ALUMINUM | CHANGED | |
| SHAPE | CASTING | " | |
| FINISH | PAINTED | " | |
| TEMP. | | " | |
| PATT. | 1320 | " | |

**TITLE:** FISCHER MOD. "GM" MOBILE UNIT
HAND TIMER - BUMPER SUPPORT

H. G. FISCHER & CO.
2335 WABANSIA AVE.
CHICAGO, ILL.

CAT. NO.

PART NO. 12259F

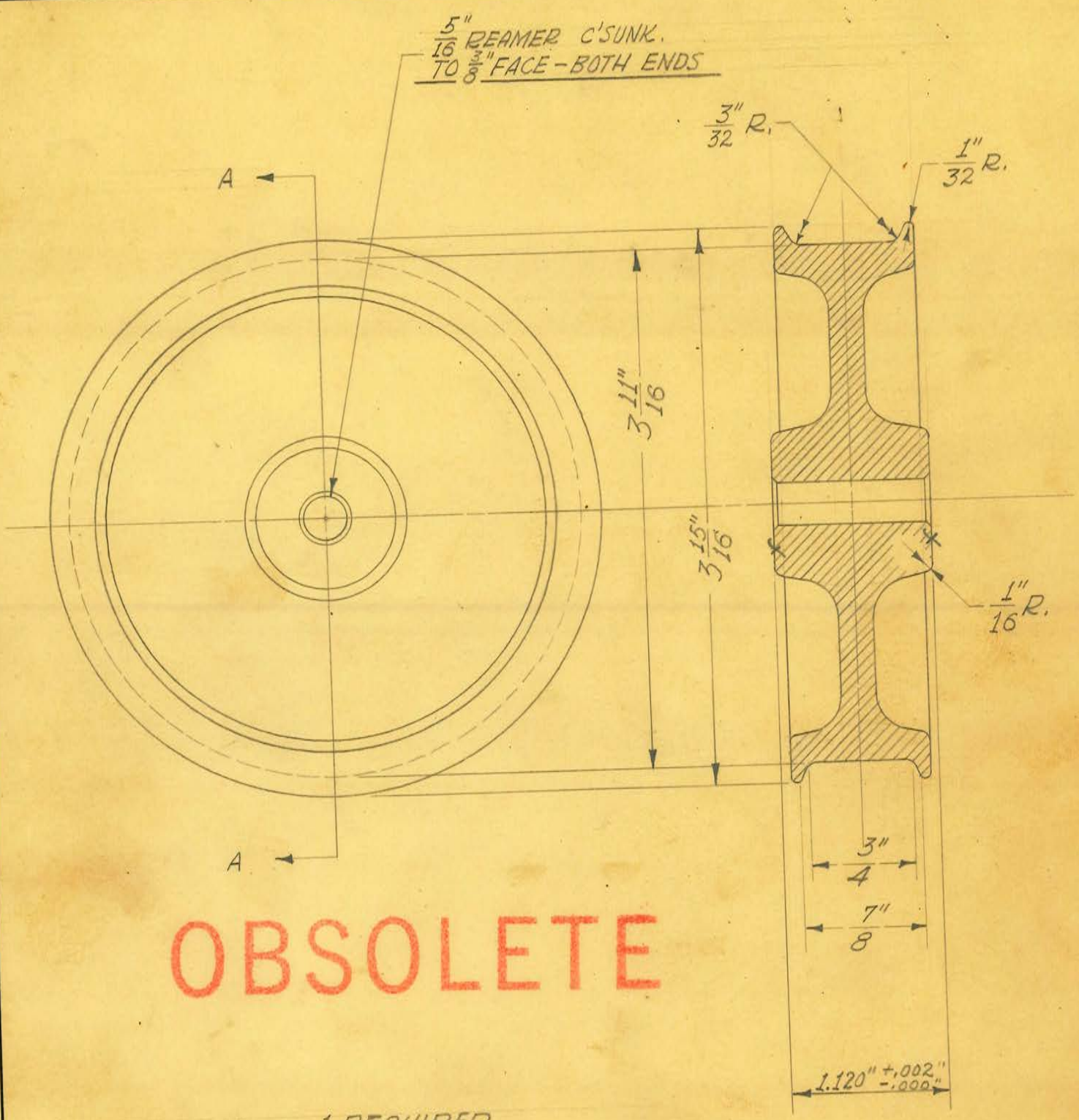


OBSOLETE

1 REQUIRED

SECTION THRU "A-A"

CIRCULAR FORMING TOOL #11095

| | | | |
|---|---|---|---|
| SIZE | | ISSUE 11-8-38 | J.W. |
| KIND | IRON CASTING | CHANGED | |
| SHAPE | | " | |
| FINISH | CAD. PLATE #25 & PAINTED | " | |
| TEMP. | | " | |
| PATT. | 1266 | " | |

TITLE: FISCHER MOD. "GM" MOBILE UNIT - BASE - GROOVED ROLLER - SMALL

H. G. FISCHER & CO.
2335 WABANSIA AVE.
CHICAGO, ILL.

CAT. NO.

PART NO. 12264F

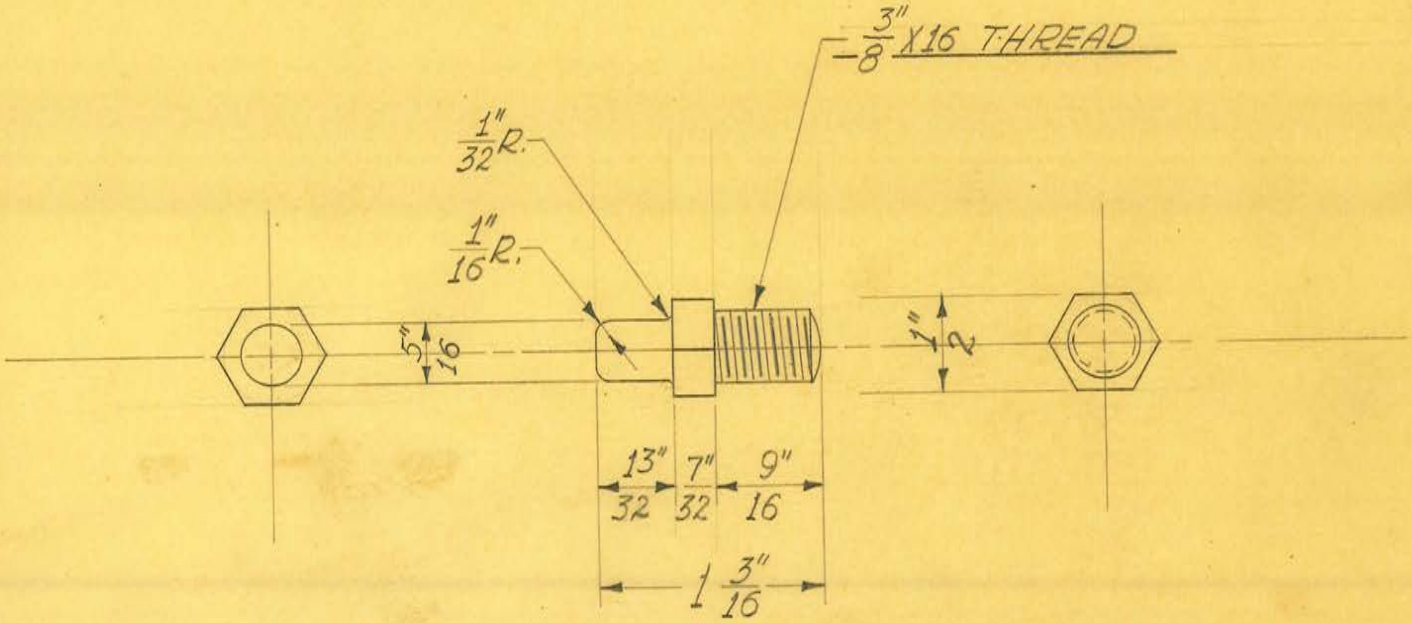


2 REQUIRED

OBSOLETE

| | | | |
|---|---|---|---|
| SIZE | 1/2" HEX. | ISSUE 11-7-38 | J.W. |
| KIND | C.R. STEEL | CHANGED | |
| SHAPE | ROD | " | |
| FINISH | | " | |
| TEMP. | CASE HARDEN | " | |
| PATT. | | " | |

**TITLE:** FISCHER MOD. "GM" MOBILE UNIT - BASE - CASTER SWIVEL RETAINING PIN

H. G. FISCHER & CO.
2335 WABANSIA AVE.
CHICAGO, ILL.

CAT. NO.

PART NO. 12265

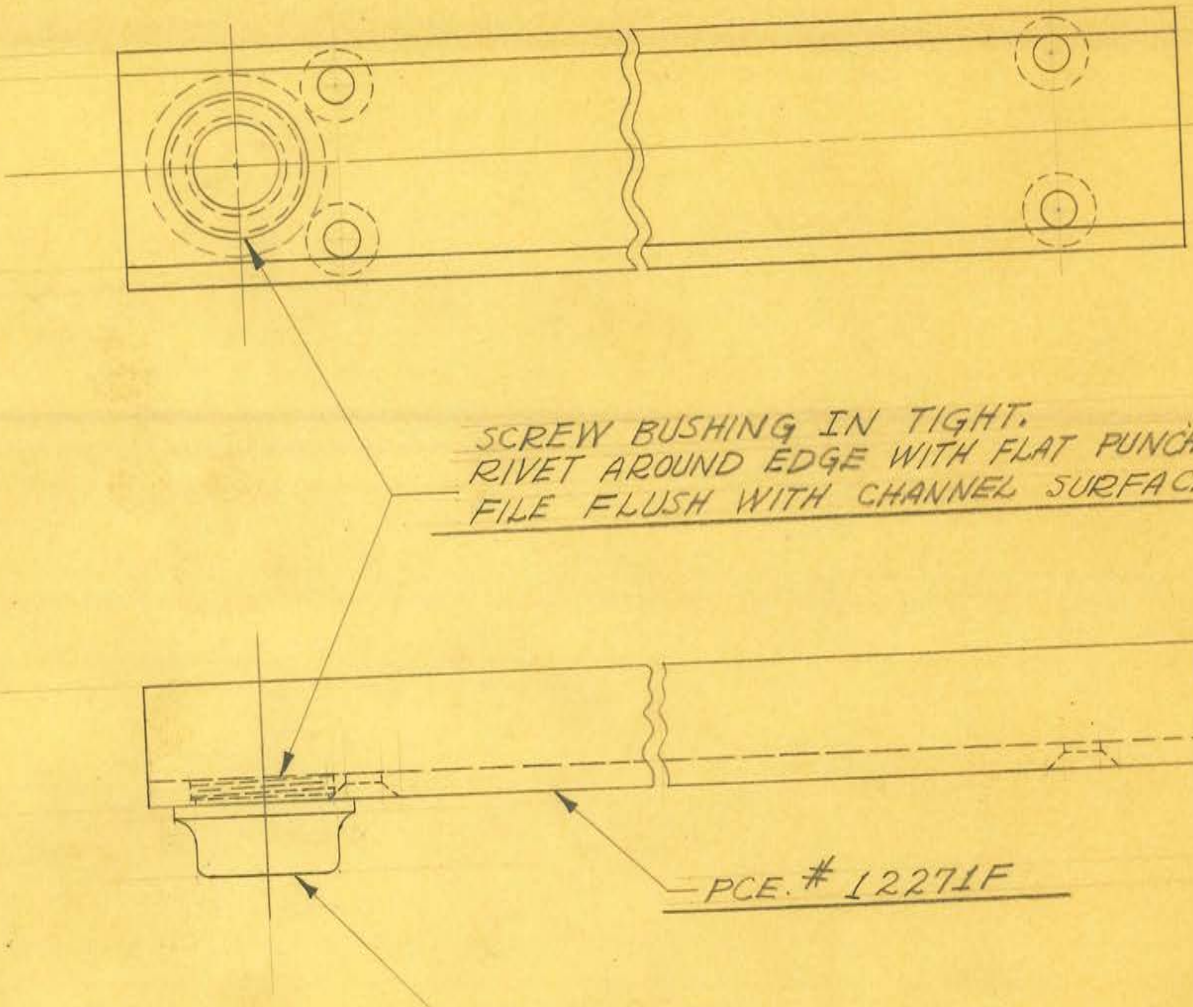


OBSOLETE

| | | | | |
|---|---|---|---|---|
| SIZE | | ISSUE 11-30-38 | J.W. | TITLE: FISCHER MOD. "GM" MOBILE UNIT - UPRIGHT CHANNEL ASSEM. -LONG |
| KIND | | CHANGED 10-5-39 | J.W. | |
| SHAPE | | " | | |
| FINISH | SATIN CHR.# | " | | |
| TEMP. | | " | | |
| PATT. | | " | | |

H. G. FISCHER & CO.
2335 WABANSIA AVE.
CHICAGO, ILL.

CAT. NO.

PART NO. 12273G

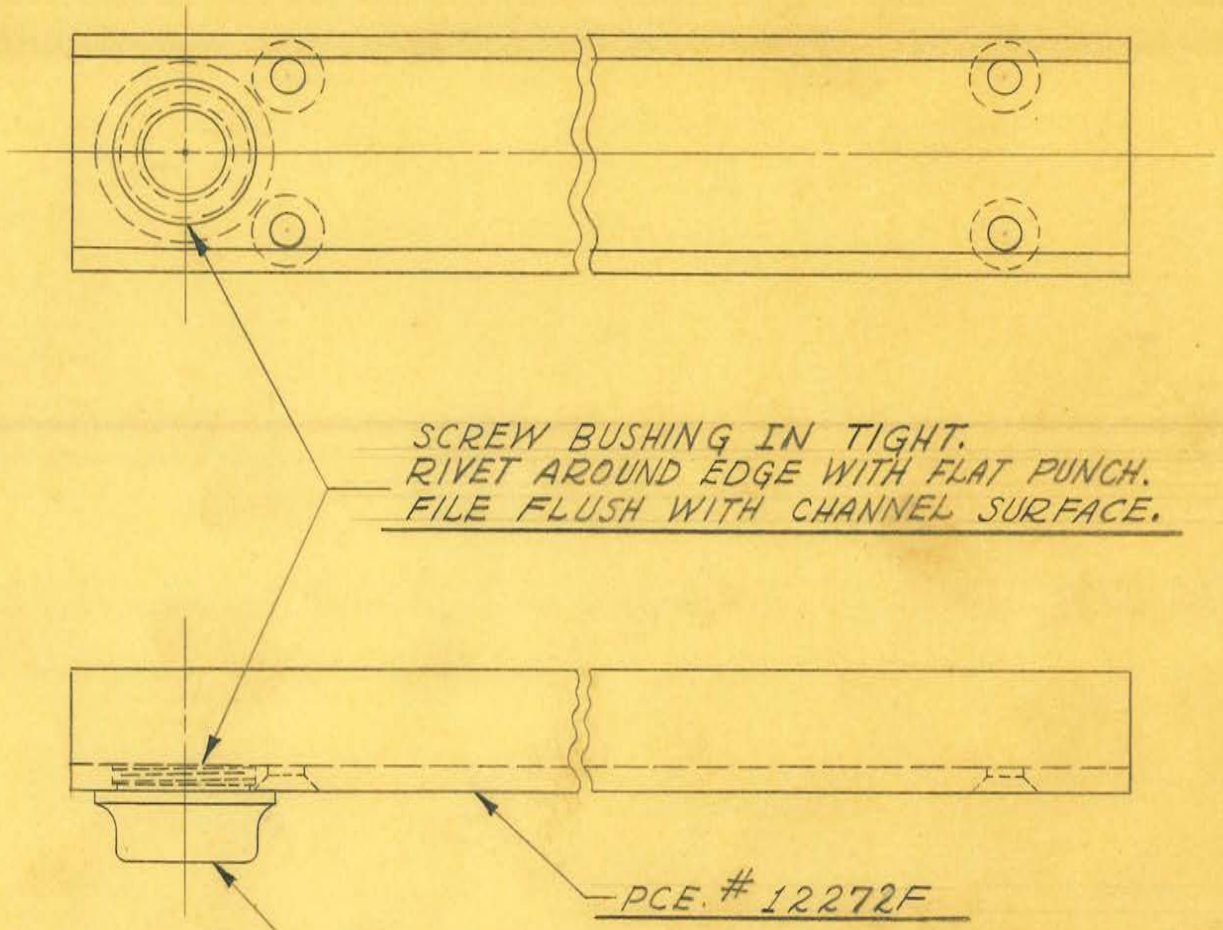


OBSOLETE

obsolete

1 REQUIRED

| | | | |
|---|---|---|---|
| SIZE | | ISSUE 11-30-38 | J.W. |
| KIND | | CHANGED | |
| SHAPE | | " | |
| FINISH | SATIN CHR. # | " | |
| TEMP. | | " | |
| PATT. | | " | |

**TITLE:** FISCHER MOD. "GM" MOBILE UNIT - UPRIGHT CHANNEL ASSEM. - SHORT

H. G. FISCHER & CO.
2335 WABANSIA AVE.
CHICAGO, ILL.

CAT. NO.

PART NO. 12274G

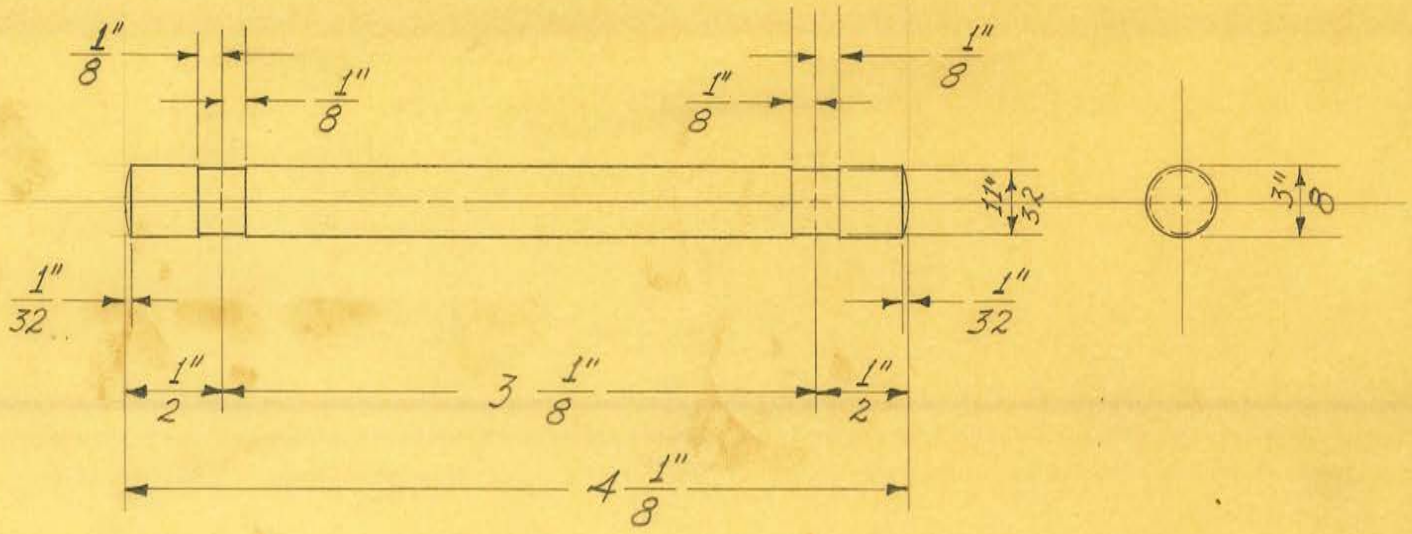


1 REQUIRED

OBSOLETE

| | | | |
|---|---|---|---|
| SIZE | 3/8" DIAM. | ISSUE 12-2-38 | J.W. |
| KIND | C.R. STEEL | CHANGED | |
| SHAPE | | " | |
| FINISH | DU-LITE #8 | " | |
| TEMP. | | " | |
| PATT. | | " | |

**TITLE:** FISCHER MOD. "GM" MOBILE UNIT. – COUNTERWEIGHT EQUALIZING PULLEY SHAFT

H. G. FISCHER & CO.
2335 WABANSIA AVE.
CHICAGO, ILL.

CAT. NO.

PART NO. 12276

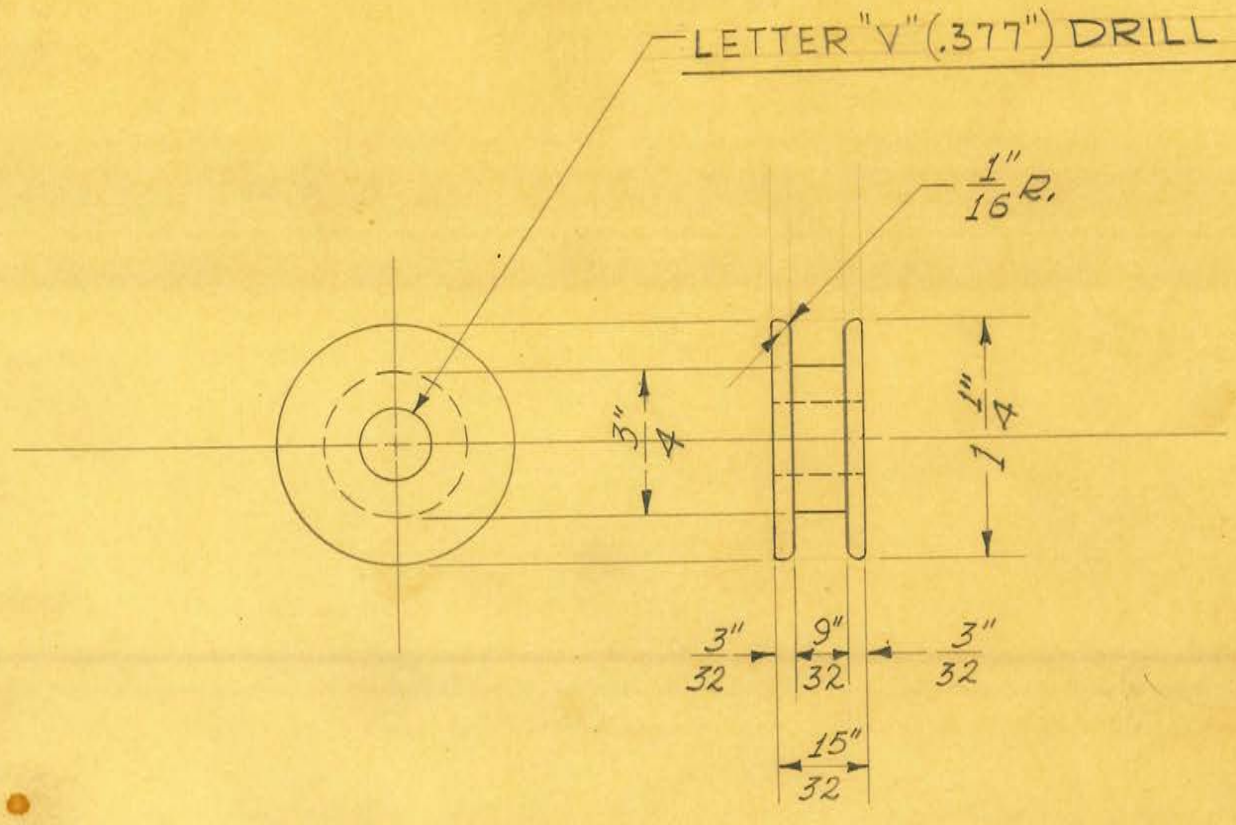


1 REQUIRED

OBSOLETE

| | | | |
|---|---|---|---|
| SIZE | 1 1/4" DIAM. | ISSUE 12-2-38 | J.W. |
| KIND | C.R. STEEL | CHANGED | |
| SHAPE | | " | |
| FINISH | | " | |
| TEMP. | | " | |
| PATT. | | " | |

TITLE: FISCHER MOD. "GM" MOBILE UNIT - COUNTERWEIGHT EQUALIZING PULLEY

H. G. FISCHER & CO.
2335 WABANSIA AVE.
CHICAGO, ILL.

CAT. NO.

PART NO. 12277

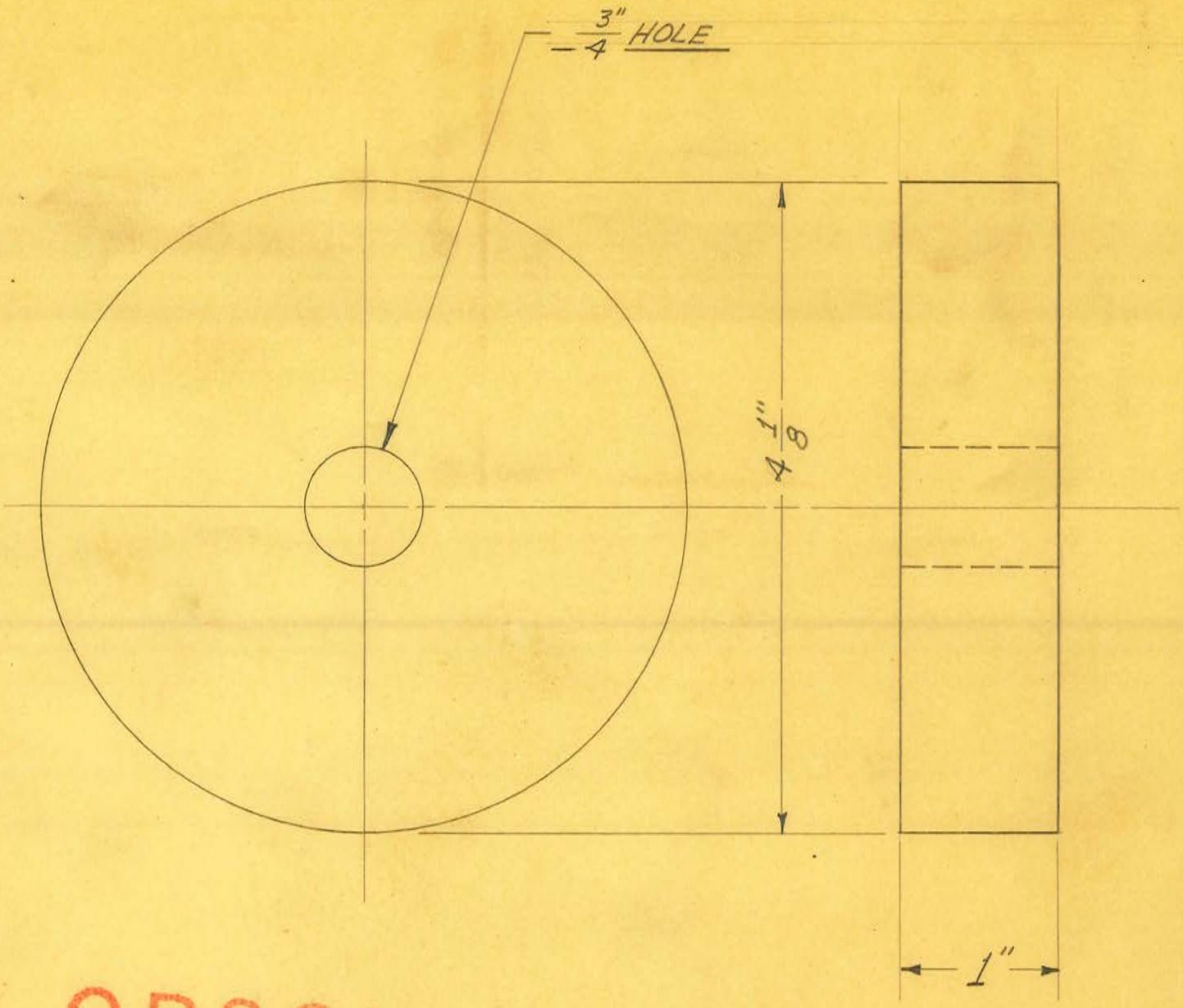


OBSOLETE

1 REQUIRED

Obsolete

STOCK # 5423G

| | | | |
|---|---|---|---|
| SIZE | 1" SHEET | ISSUE 12-2-38 | J.W. |
| KIND | BLK. FELT | CHANGED | |
| SHAPE | | " | |
| FINISH | | " | |
| TEMP. | | " | |
| PATT. | | " | |

**TITLE:** FISCHER MOD. "GM" MOBILE UNIT - COUNTERWEIGHT FELT BUMPER

H. G. FISCHER & CO.
2335 WABANSIA AVE.
CHICAGO, ILL.

CAT. NO.

PART NO. 12278

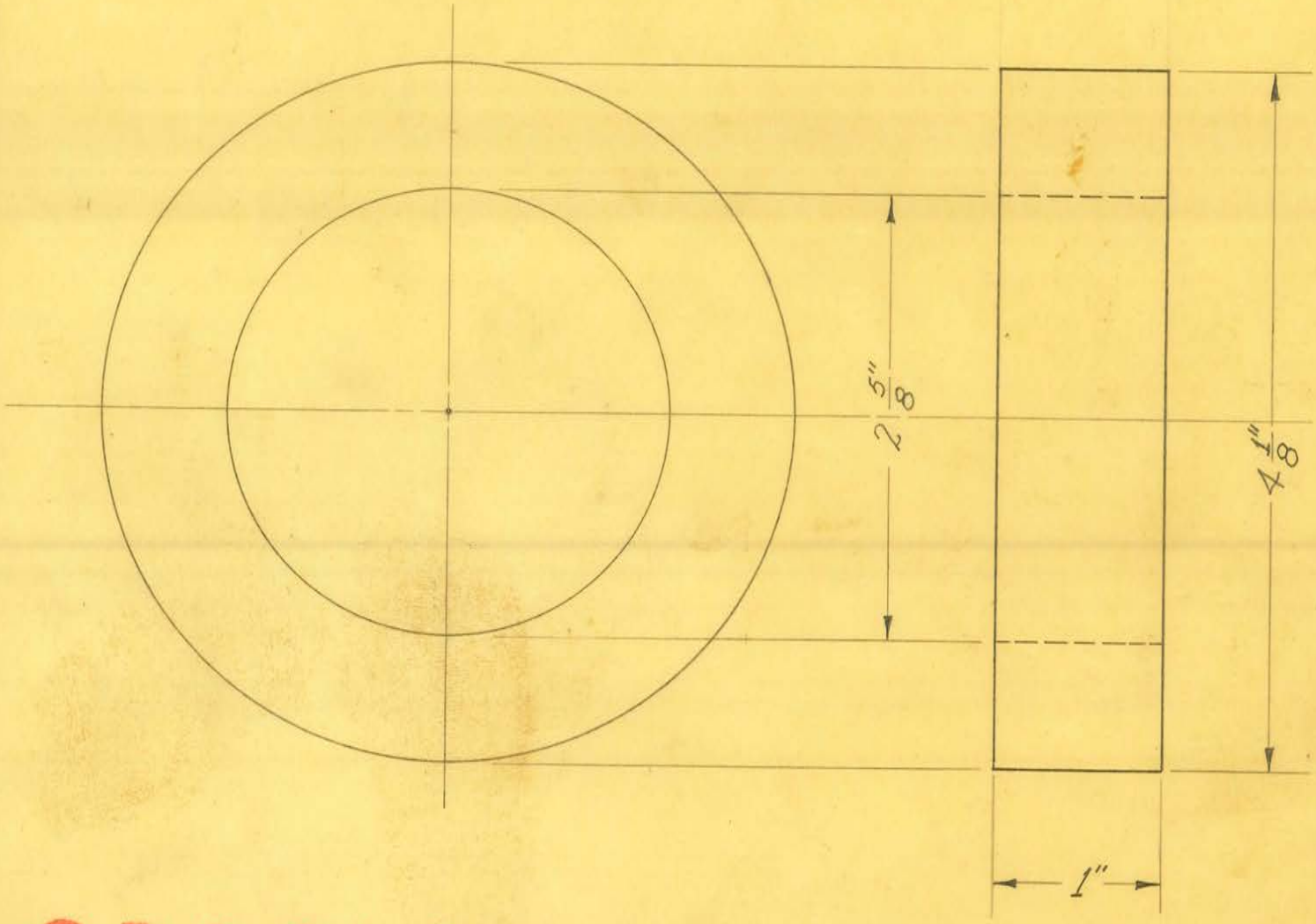


OBSOLETE

1 REQUIRED

STOCK. # 5423G

| | | | |
|---|---|---|---|
| SIZE | 1" SHEET | ISSUE 7-1 | |
| KIND | BLK. SHEET | CHANGED | |
| SHAPE | | " | |
| FINISH | | " | |
| TEMP. | | " | |
| PATT. | | " | |

**TITLE:**
FISCHER MOD. "GM" MOBILE UNIT
COUNTERWEIGHT FELT BUMPER

H. G. FISCHER & CO.
2335 WABANSIA AVE.
CHICAGO, ILL.

CAT. NO.

PART NO. 12278A

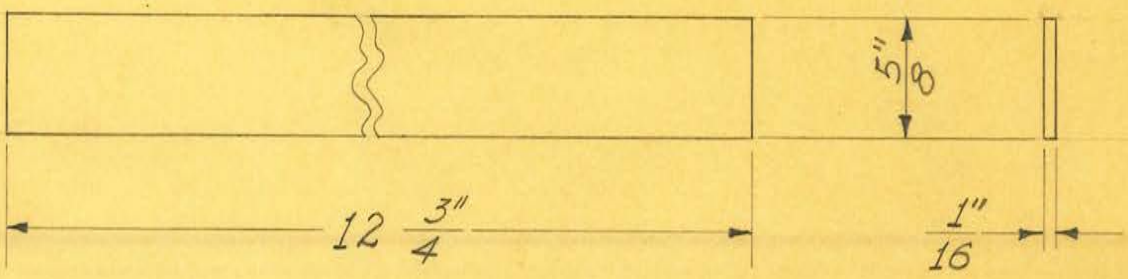


2 REQUIRED

OBSOLETE

| | | | |
|---|---|---|---|
| SIZE | | ISSUE 12-2-38 | J.W. |
| KIND | FROM 5030½ | CHANGED | |
| SHAPE | | " | |
| FINISH | | " | |
| TEMP. | | " | |
| PATT. | | " | |

**TITLE:** FISCHER MOD. "GM" MOBILE UNIT - COUNTERWEIGHT FELT STRIP

H. G. FISCHER & CO.
2335 WABANSIA AVE.
CHICAGO, ILL.

CAT. NO.

PART NO. 12279

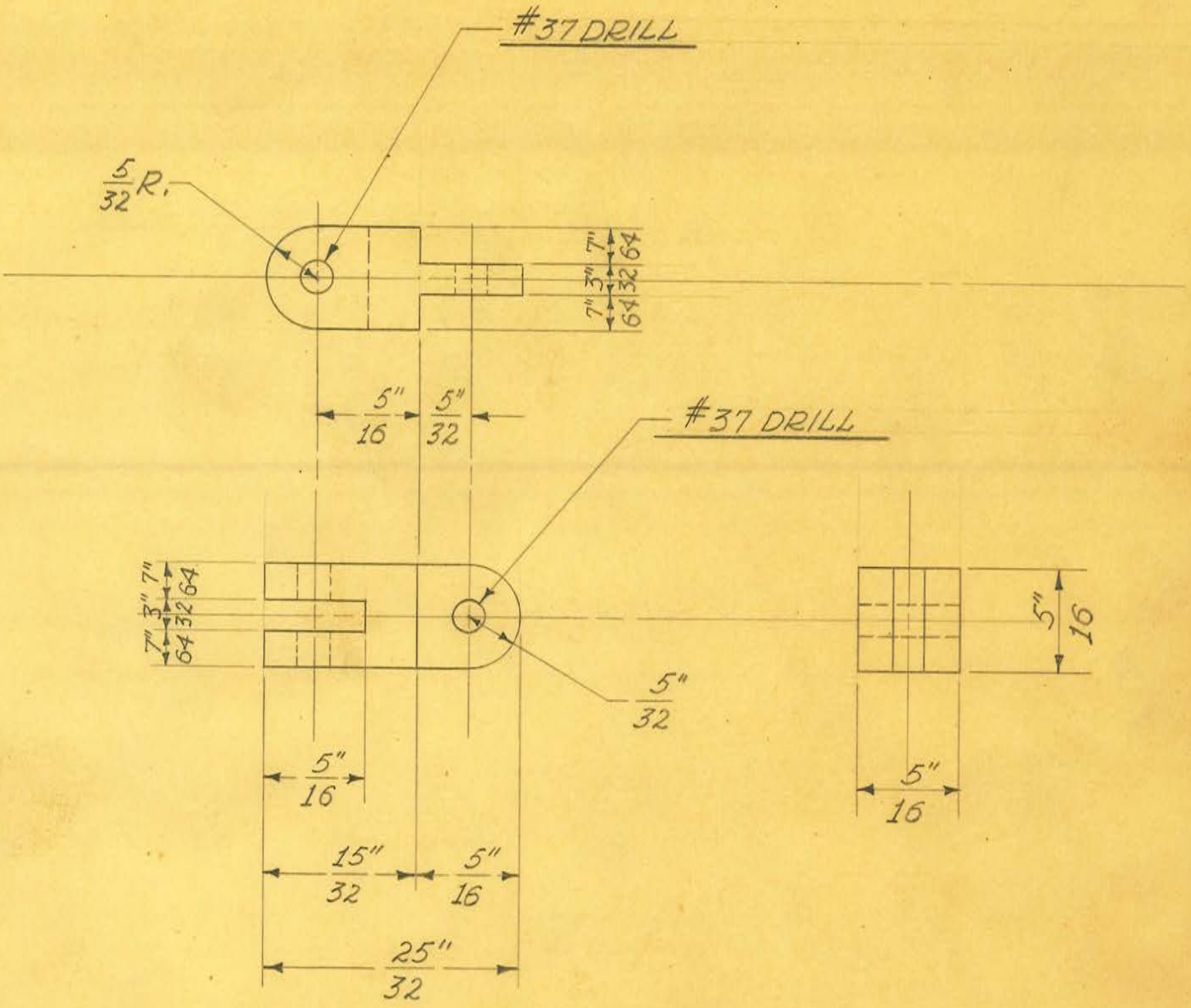


OBSOLETE

SCALE ~ DOUBLE SIZE

2 REQUIRED

| | | | |
|---|---|---|---|
| SIZE | 5/16" SQUARE | ISSUE 12-5-38 | J.W. |
| KIND | C.R. STEEL | CHANGED | |
| SHAPE | | " | |
| FINISH | | " | |
| TEMP. | | " | |
| PATT. | | " | |

**TITLE:** FISCHER MOD. "GM" MOBILE UNIT - COUNTERWEIGHT CHAIN CONNECTION

H. G. FISCHER & CO.
2335 WABANSIA AVE.
CHICAGO, ILL.

CAT. NO.

PART NO. 12282

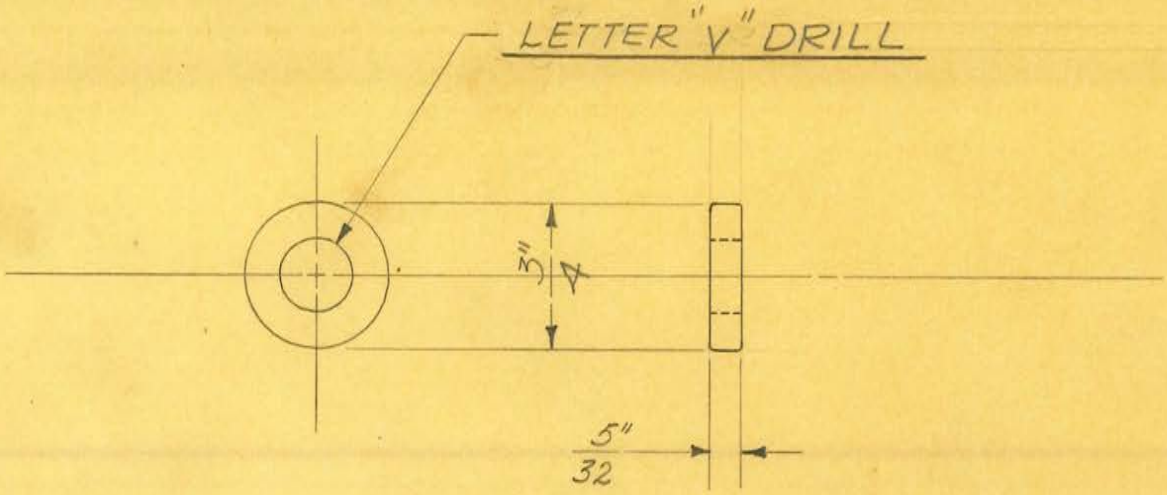


2 REQUIRED

OBSOLETE

| | | | | |
|---|---|---|---|---|
| SIZE | 3/4" DIAM. | ISSUE 12-7-38 | J.W. | TITLE: FISCHER MOD. "G.M." MOBILE UNIT COUNTERWEIGHT PULLEY SPACER -END |
| KIND | C.R. STEEL | CHANGED | | |
| SHAPE | | " 6-19-46 | J.W. | |
| FINISH | CAD. #23 | " | | |
| TEMP. | | " | | |
| PATT. | | " | | |

H. G. FISCHER & CO.
2335 WABANSIA AVE.
CHICAGO, ILL.

CAT. NO.

PART NO. 12285

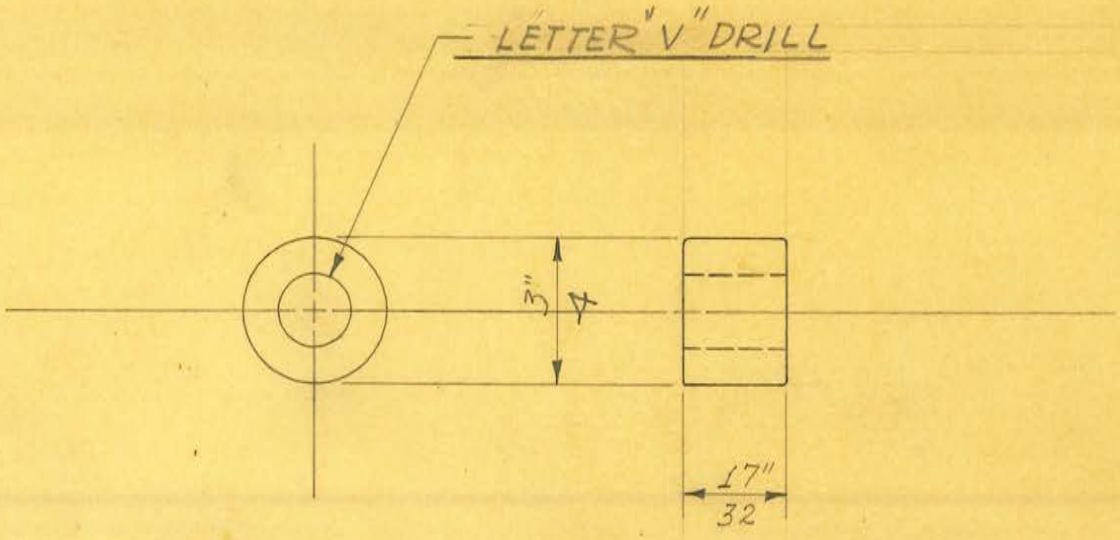


1 REQUIRED

OBSOLETE

| | | | | |
|---|---|---|---|---|
| SIZE | 3/4" DIAM. | ISSUE 12-7-38 | J.W. | TITLE: FISCHER MOD. "GM" MOBILE UNIT COUNTERWEIGHT PULLEY SPACER - CENTER |
| KIND | C.R. STEEL | CHANGED | | |
| SHAPE | | " 6-19-46 | J.W. | |
| FINISH | CAD. #23 | " | | |
| TEMP. | | " | | |
| PATT. | | " | | |

H. G. FISCHER & CO.
2335 WABANSIA AVE.
CHICAGO, ILL.

CAT. NO.

PART NO. 12286

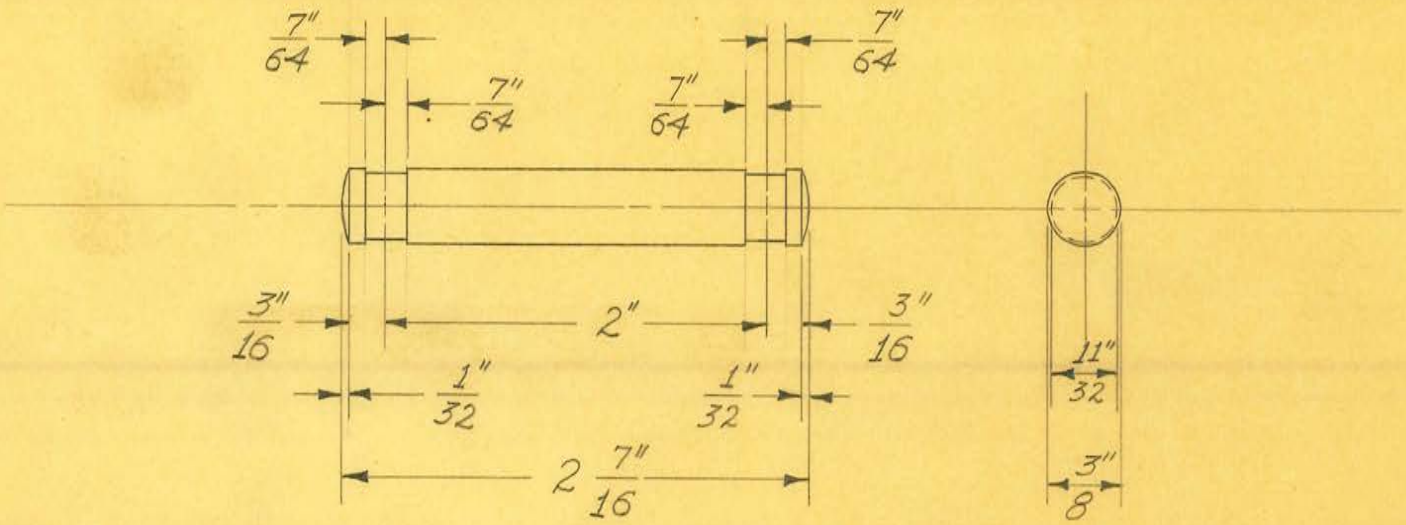


1 REQUIRED

OBSOLETE

| | | | | |
|---|---|---|---|---|
| SIZE | 3/8" DIAM. | ISSUE 12-7-38 | J.W. | TITLE: FISCHER MOD. "GM" MOBILE UNIT – COUNTERWEIGHT PULLEY SHAFT |
| KIND | C.R. STEEL | CHANGED | | |
| SHAPE | | " | | |
| FINISH | DU-LITE #8 | " | | |
| TEMP. | | " | | |
| PATT. | | " | | |

H. G. FISCHER & CO.
2335 WABANSIA AVE.
CHICAGO, ILL.

CAT. NO.

PART NO. 12287

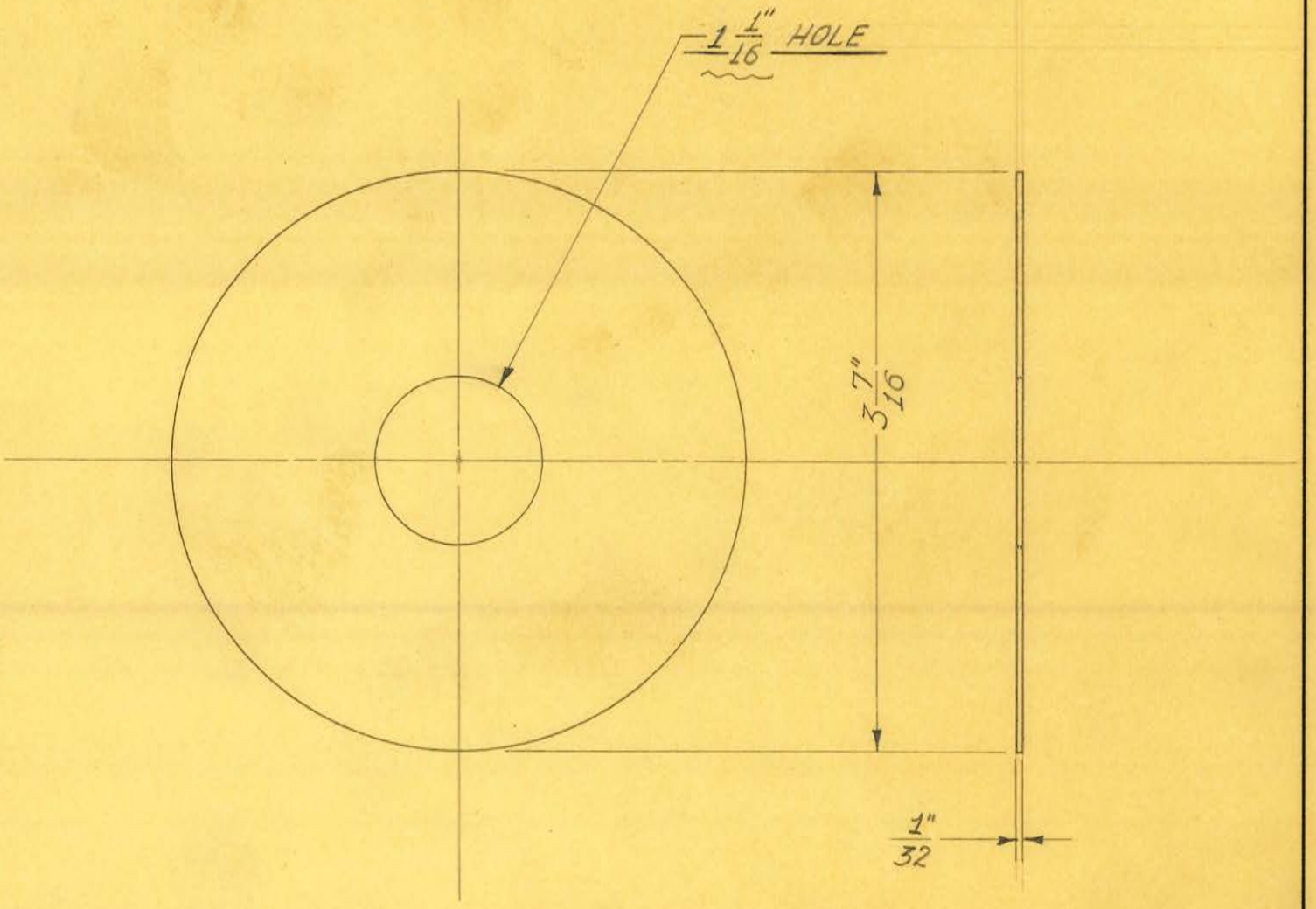


OBSOLETE

1 REQUIRED

| | | | |
|---|---|---|---|
| SIZE | 1/32" SHEET | ISSUE 12-12-38 | J.W. |
| KIND | BLACK FIBRE | CHANGED 10-9-39 | J.W. |
| SHAPE | | " | |
| FINISH | | " | |
| TEMP. | | " | |
| PATT. | | " | |

**TITLE:**
FISCHER MOD. "GM" MOBILE UNIT
GUIDE RODS SWIVEL FRICTION WASHER

H. G. FISCHER & CO.
2335 WABANSIA AVE.
CHICAGO, ILL.

CAT. NO.

PART NO. 12288A

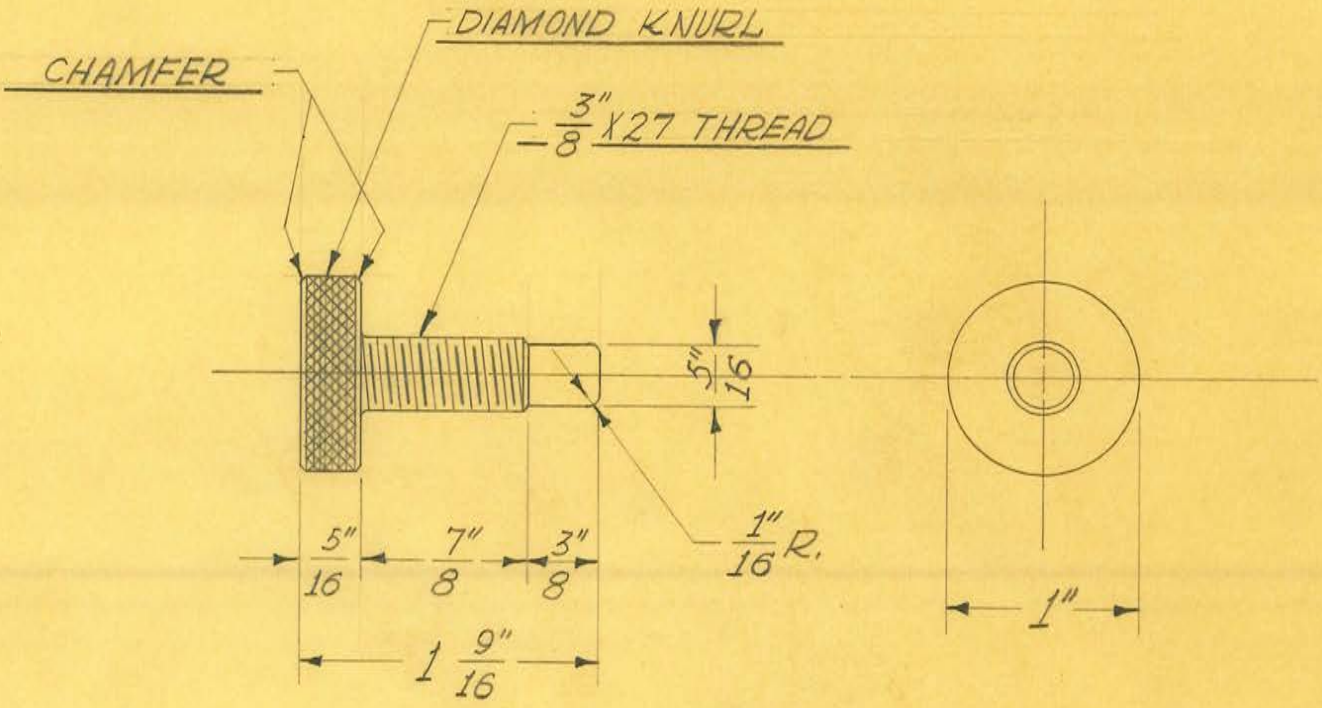


1 REQUIRED

OBSOLETE

| | | | | |
|---|---|---|---|---|
| SIZE | 1" DIAM. | ISSUE 12-21-38 | J.W. | **TITLE:** FISCHER MOD. "GM" MOBILE UNIT TRANSFORMER RELEASE CWT. CLAMP THUMB SCREW. |
| KIND | C.R. STEEL | CHANGED | | |
| SHAPE | | " | | |
| FINISH | CHROME #2 | " | | |
| TEMP. | | " | | |
| PATT. | | " | | |

H. G. FISCHER & CO.
2338 WABANSIA AVE.
CHICAGO, ILL.

CAT. NO.

PART NO. 12289

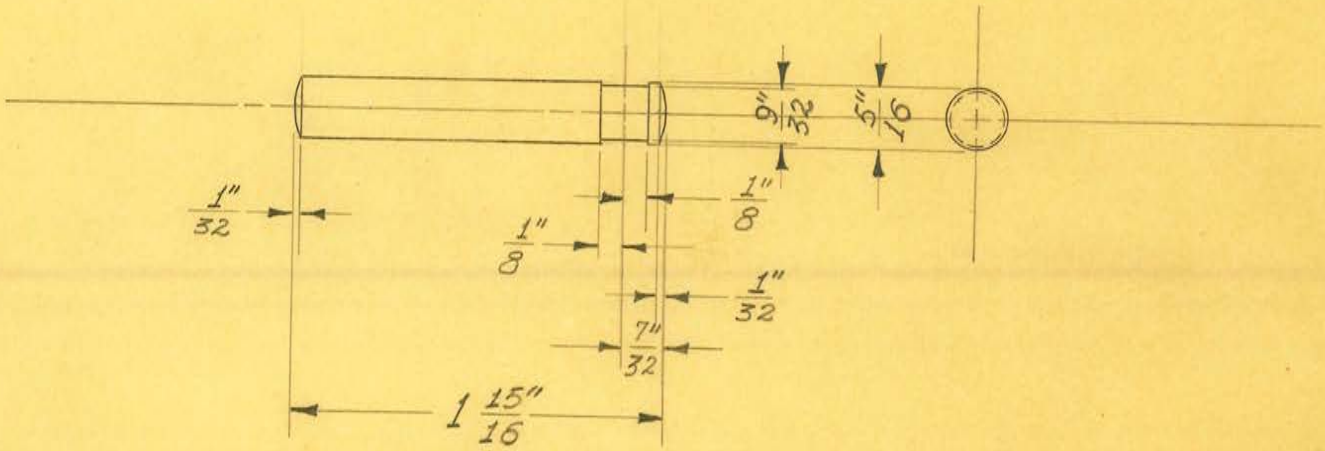


2 REQUIRED

OBSOLETE

| | | | | |
|---|---|---|---|---|
| SIZE | 5/16" DIAM. | ISSUE 4-10-39 | J.W. | TITLE: FISCHER MOD. "GM" MOBILE UNIT ROLLER SUPPORT SHAFT |
| KIND | C.R. STEEL | CHANGED | | |
| SHAPE | ROD | " | | |
| FINISH | CAD, #23 | " | | |
| TEMP. | | " | | |
| PATT. | | " | | |

H. G. FISCHER & CO.
2335 WABANSIA AVE.
CHICAGO, ILL.

CAT. NO.

PART NO. 12293

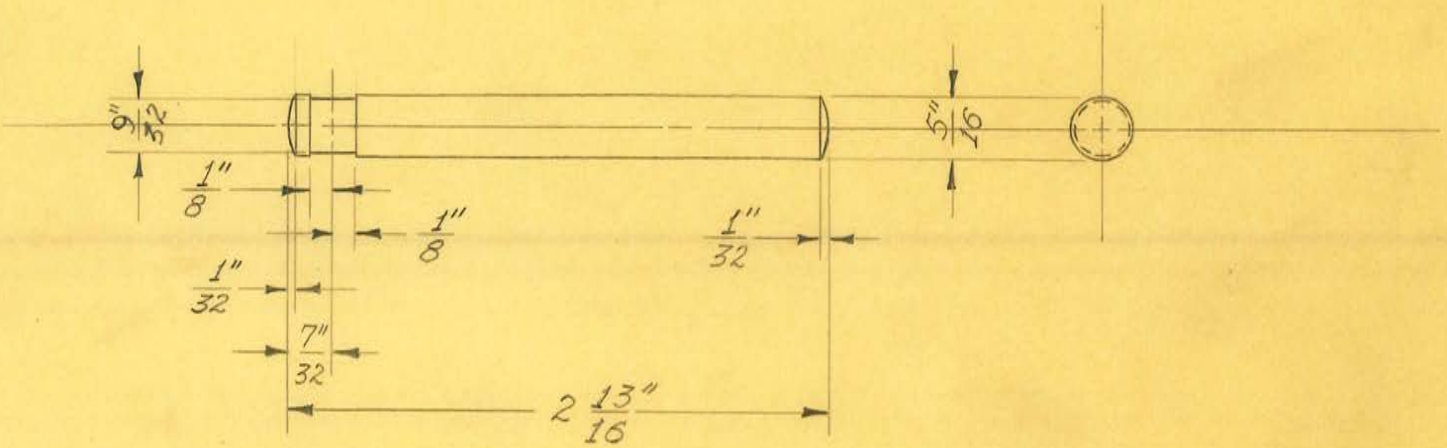


2 REQUIRED

OBSOLETE

| | | | |
|---|---|---|---|
| SIZE | 5/16" DIAM. | ISSUE 4-10-39 | J.W. |
| KIND | C.R. STEEL | CHANGED | |
| SHAPE | ROD | " | |
| FINISH | CAD. #23 | " | |
| TEMP. | | " | |
| PATT. | | " | |

**TITLE:**
FISCHER MOD. "GM" MOBILE UNIT
ROLLER SUPPORT SWIVEL SHAFT

H. G. FISCHER & CO.
2335 WABANSIA AVE.
CHICAGO, ILL.

CAT. NO.

PART NO. 12294

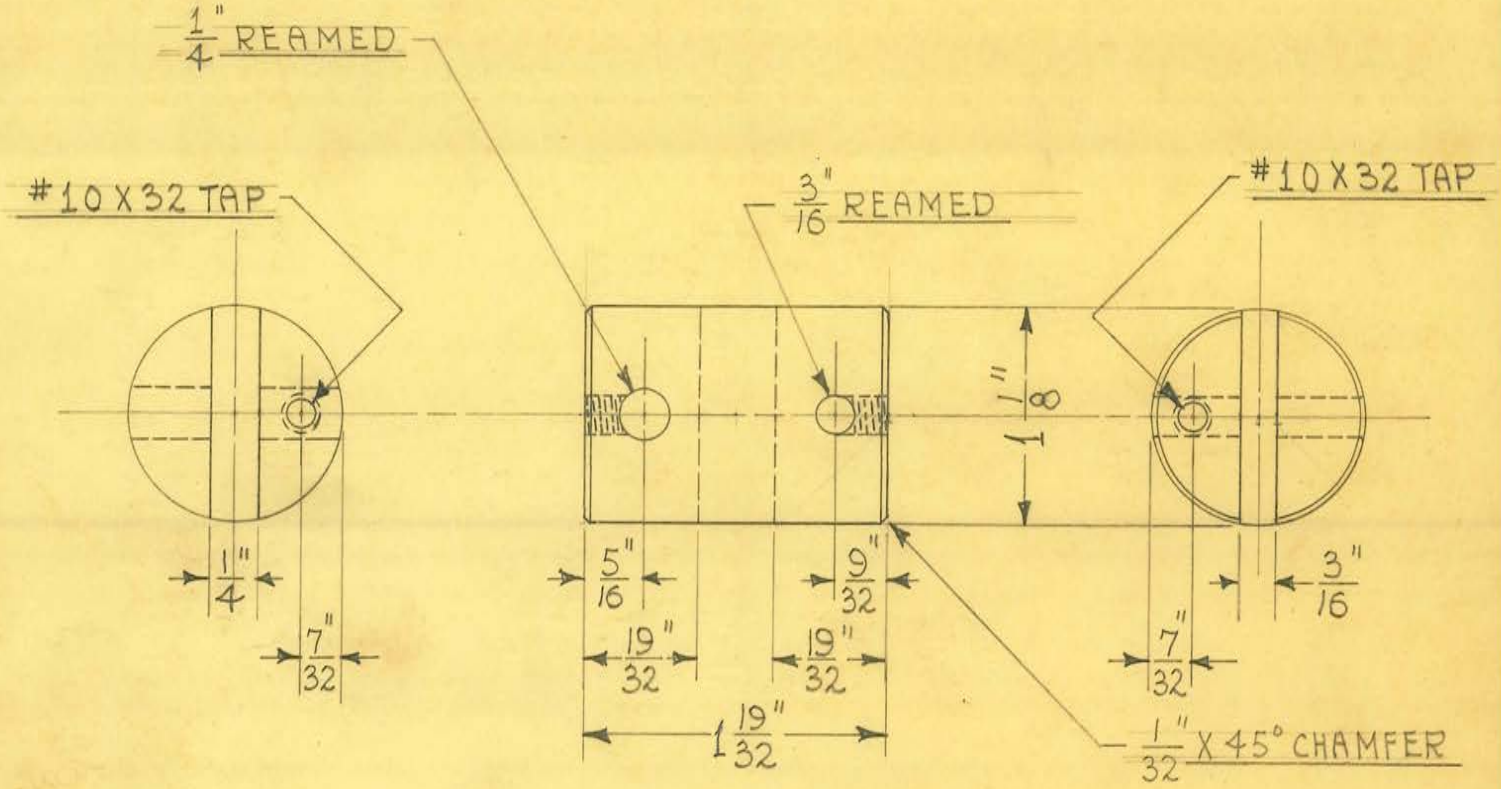


2 REQUIRED

OBSOLETE

Obsolete

| | | | |
|---|---|---|---|
| SIZE | 1 1/8" DIAM. | ISSUE 1-29-40 | HE. |
| KIND | ALUM. ROD | CHANGED | |
| SHAPE | | " | |
| FINISH | | " | |
| TEMP. | | " | |
| PATT. | | " | |

**TITLE:** WALL MODEL DENTAL X-RAY UNIT- COUNTERBALANCE SPRING PLUNGER

H. G. FISCHER & CO.
2335 WABANSIA AVE.
CHICAGO, ILL.

CAT. NO.

PART NO. 12299

CHANGE VOLTAGE TO 115

OUR PCE. NO. 12301GB

OBSOLETE
8-16-68
KF

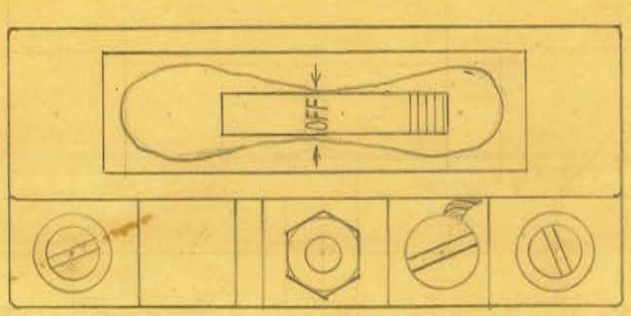


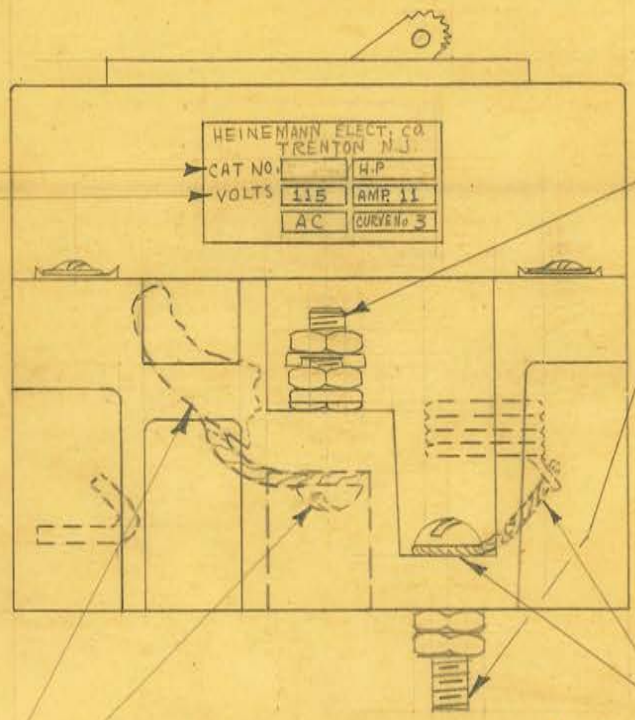


1250 VOLT TEST

STRANDED COPPER WIRE CONNECTION MADE FROM COIL TO SCREW HEAD

STRANDED COPPER WIRE CONNECTION MADE FROM CONTACT ARM TO SCREW HEAD

| | | | |
|---|---|---|---|
| SIZE | | ISSUE 11-29-40 | J.V.W. |
| KIND | | CHANGED 3-25-41 | J.V.W. |
| SHAPE | | " | |
| FINISH | | " | |
| TEMP. | | " | |
| PATT. | | " | |

**TITLE:**
FISCHER WALL MOD. DENTAL X-RAY UNIT CONTROL BOX - CIRCUIT BREAKER

H. G. FISCHER & CO.
2335 WABANSIA AVE.
CHICAGO, ILL.

CAT. NO.

PART NO. 12301GB

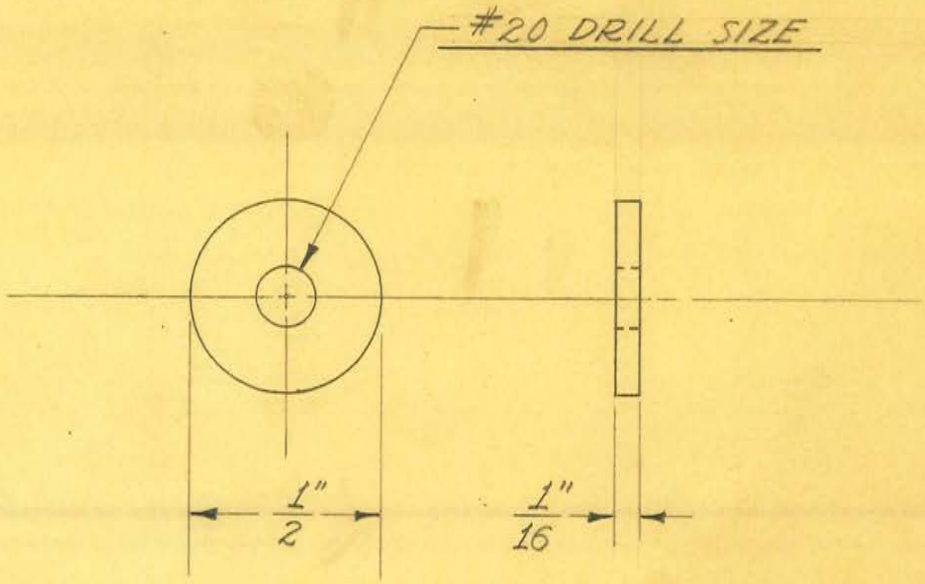


SCALE ÷ DOUBLE SIZE

5 REQUIRED

OBSOLETE

obsolete

| | | | |
|---|---|---|---|
| SIZE | 1/16" SHEET | ISSUE 3-10-39 | J.W. |
| KIND | VELLUMOID | CHANGED | |
| SHAPE | | " | |
| FINISH | | " | |
| TEMP. | | " | |
| PATT. | | " | |

**TITLE:**
WALL MODEL DENTAL "X-RAY" UNIT
TERMINAL STUD GASKET

H. G. FISCHER & CO.
2335 WABANSIA AVE.
CHICAGO, ILL.

CAT. NO.

PART NO. 12344

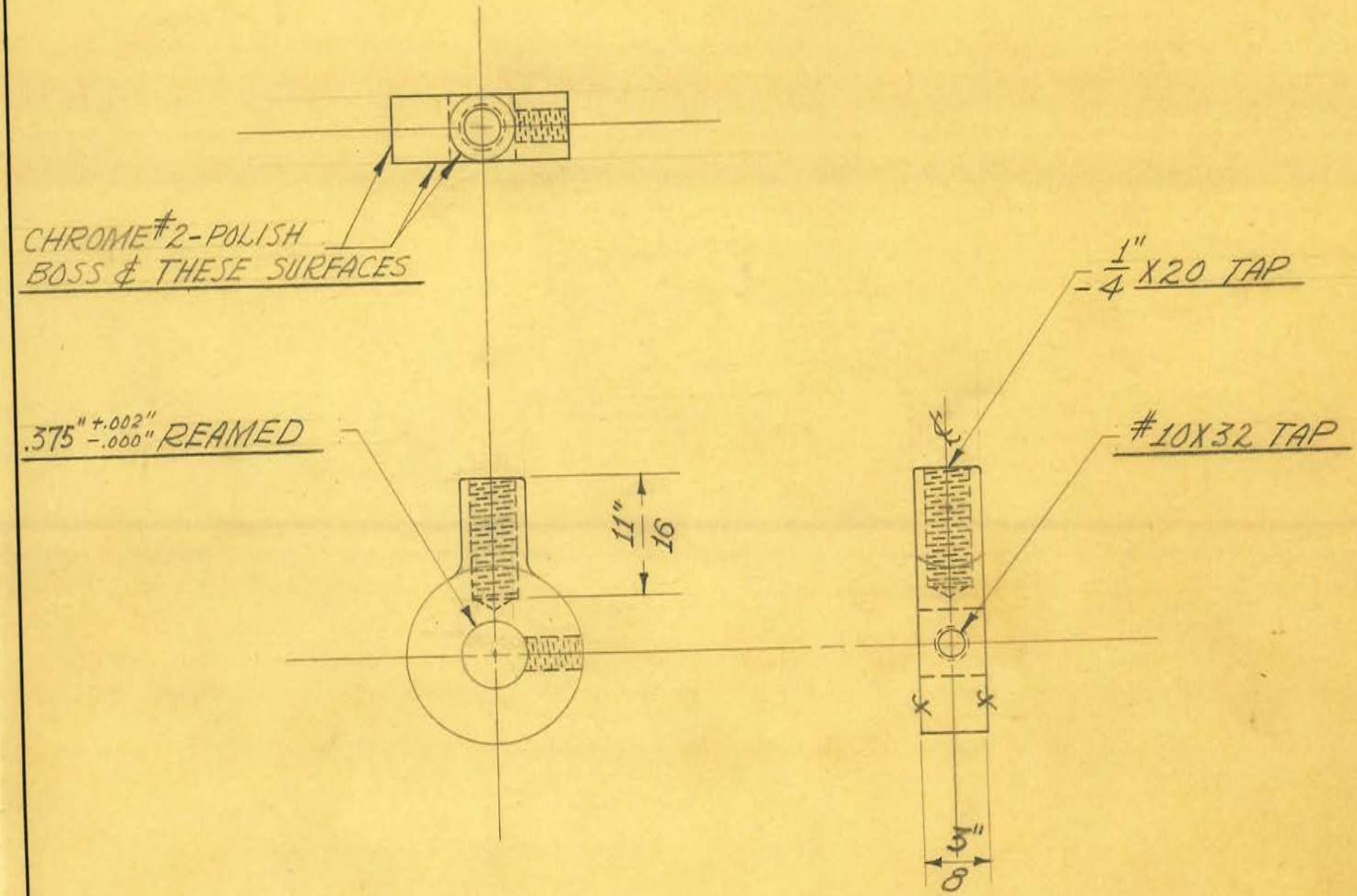


1 REQUIRED

OBSOLETE

Obsolete

| | | | |
|---|---|---|---|
| SIZE | | ISSUE 2-28-39 | J.W. |
| KIND | BRASS. CASTING | CHANGED | |
| SHAPE | | " | |
| FINISH | CHROME #2 | " | |
| TEMP. | | " | |
| PATT. | 1319 | " | |

**TITLE:** WALL MODEL DENTAL X-RAY UNIT
COUNTERBALANCE CONNECTOR - RIGHT

H. G. FISCHER & CO.
2335 WABANSIA AVE.
CHICAGO, ILL.

CAT. NO.

PART NO. 12361F

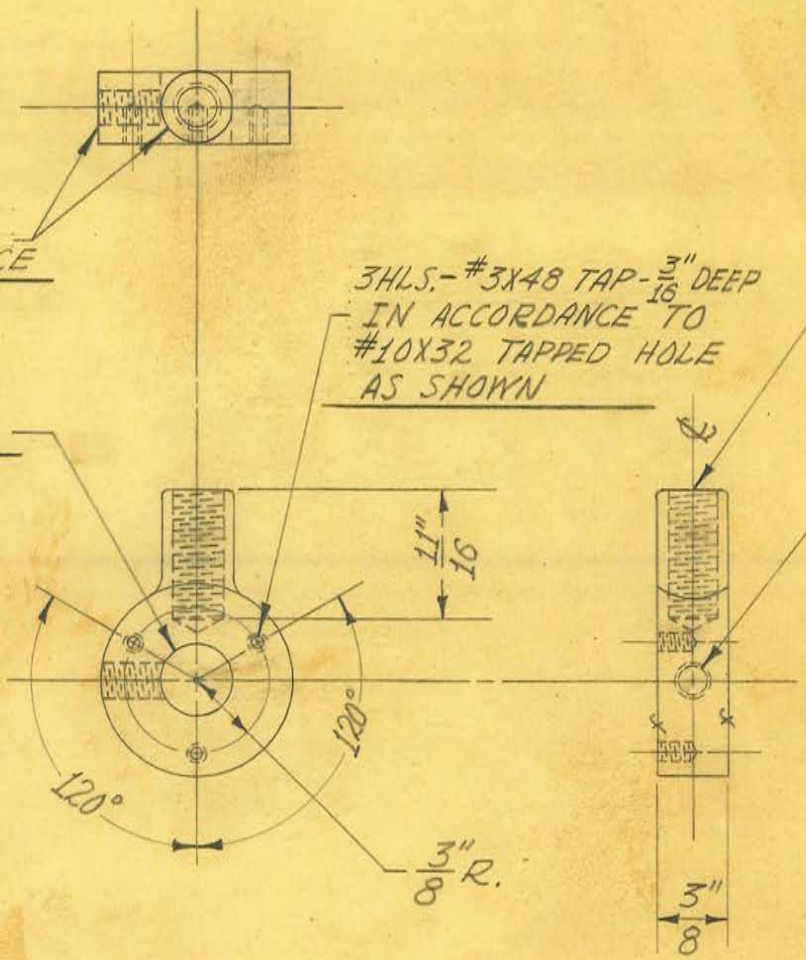


1 REQUIRED

OBSOLETE

Obsolete

| | | | |
|---|---|---|---|
| SIZE | | ISSUE 3-10-39 | J.W. |
| KIND | | CHANGED | |
| SHAPE | | " | |
| FINISH | CHROME #2 | " | |
| TEMP. | | " | |
| PATT. | | " | |

**TITLE:** WALL MODEL DENTAL "X-RAY" UNIT
COUNTER BALANCE CONNECTOR - LEFT

H. G. FISCHER & CO.
2335 WABANSIA AVE.
CHICAGO, ILL.

CAT. NO.

PART NO. 12361 1/2

OBSOLETE

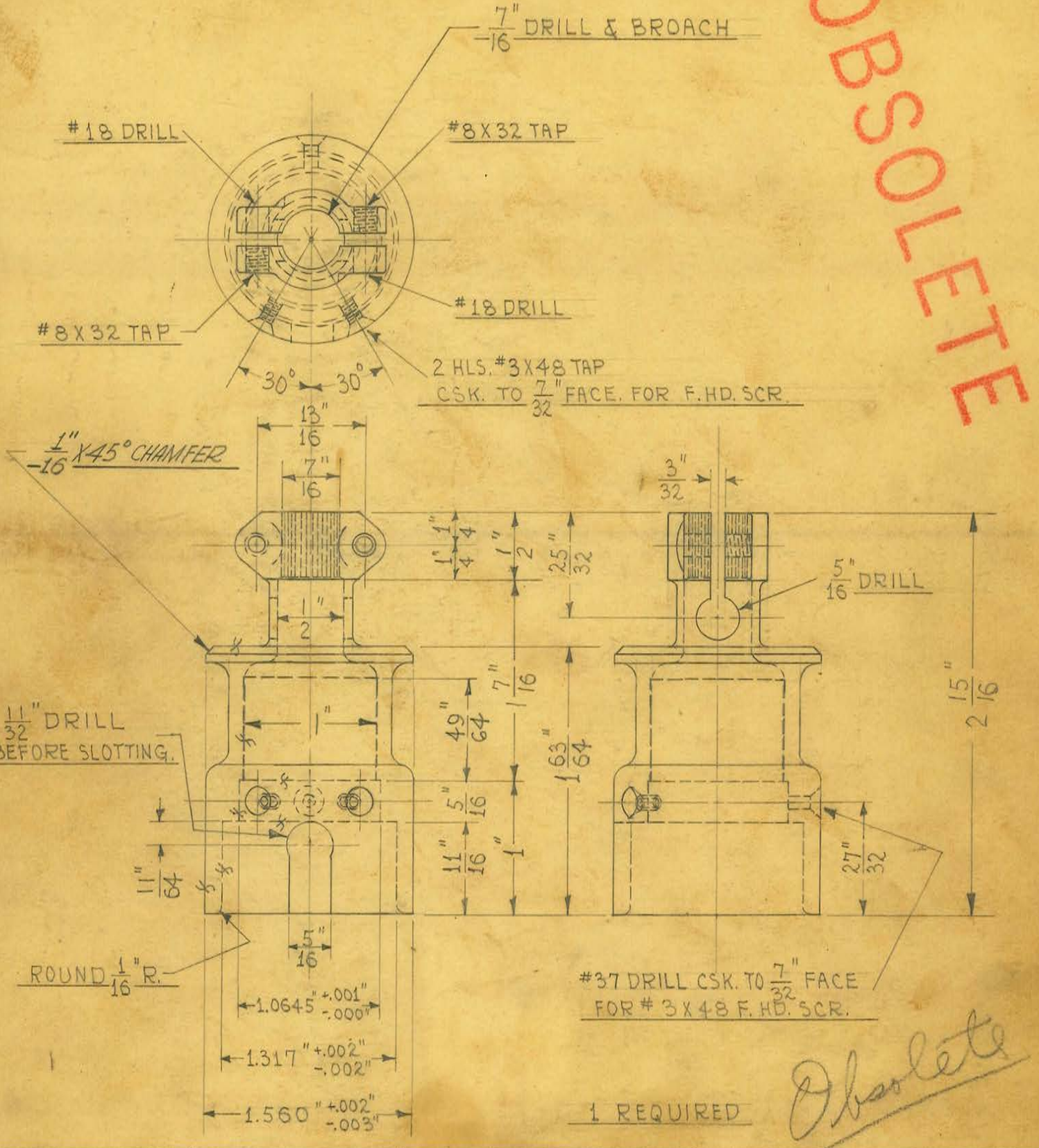


| | | | |
|---|---|---|---|
| SIZE | | ISSUE 1-27-39 | HE. |
| KIND | BRASS CASTING | CHANGED | |
| SHAPE | | " | |
| FINISH | | " | |
| TEMP. | | " | |
| PATT. | 1323 | " | |

**TITLE:**
WALL MODEL DENTAL X-RAY UNIT- TRANSF. HEAD UPPER SWIVEL CONNECTION

H. G. FISCHER & CO.
2335 WABANSIA AVE.
CHICAGO, ILL.

CAT. NO.

PART NO. 12364F

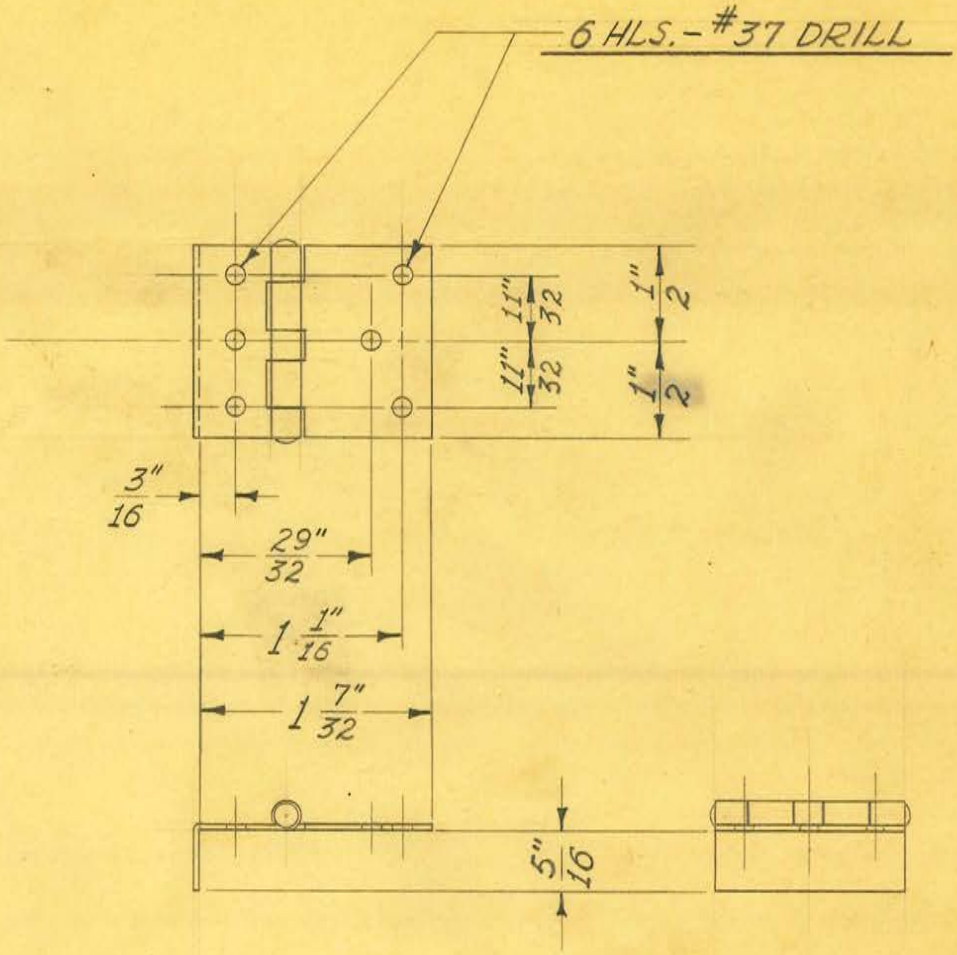


2 REQUIRED

OBSOLETE

| | | | |
|---|---|---|---|
| SIZE | FROM 12379 | ISSUE 3-9-39 | J.W. |
| KIND | | CHANGED | |
| SHAPE | | " | |
| FINISH | CHROME #2 | " | |
| TEMP. | | " | |
| PATT. | | " | |

**TITLE:** WALL MODEL DENTAL "X-RAY" UNIT
CONTROL BOX HINGE - DRILLED

H. G. FISCHER & CO.
2335 WABANSIA AVE.
CHICAGO, ILL.

CAT. NO.

PART NO. 12379F

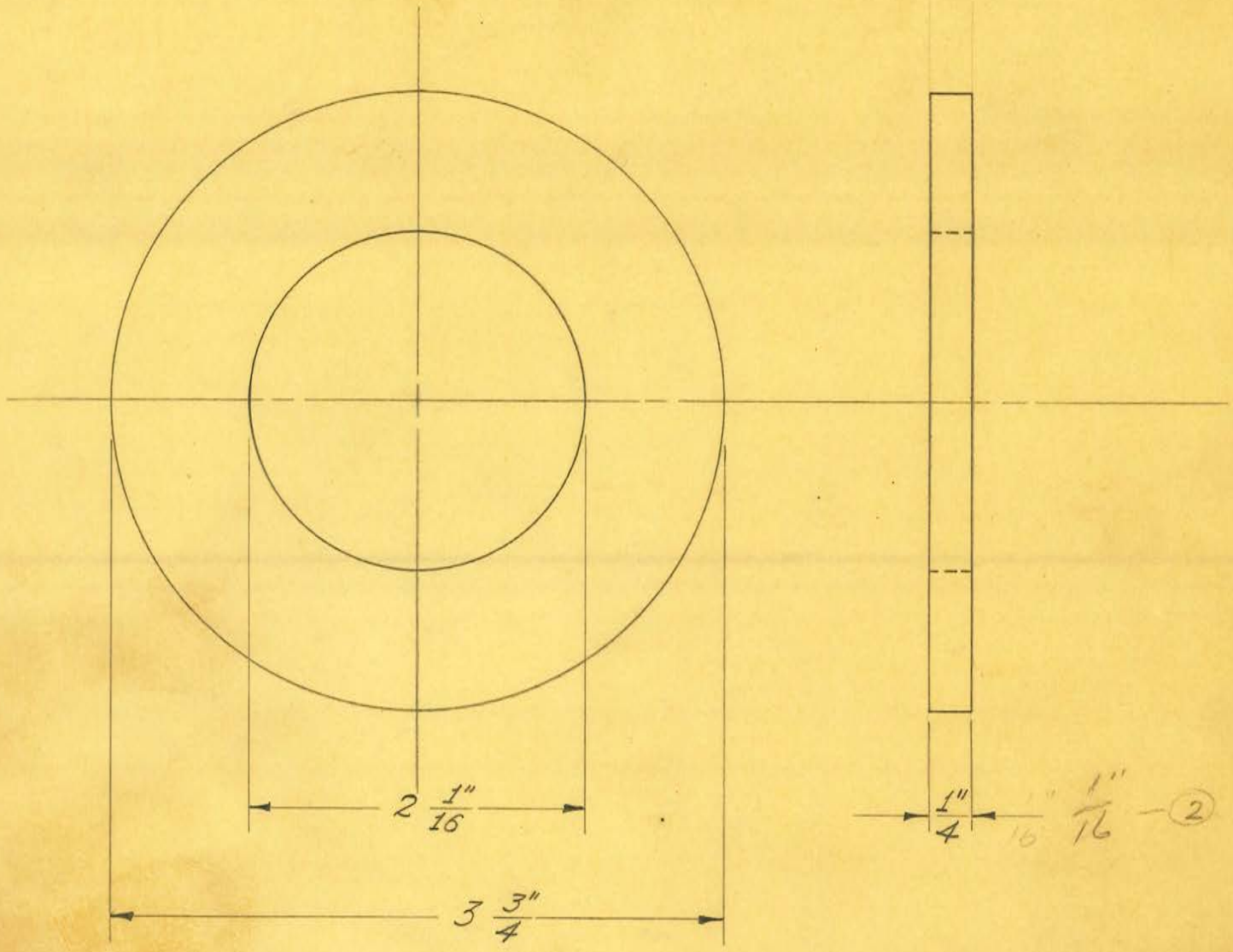


OBSOLETE

1 REQUIRED

Obsolete

| | | | |
|---|---|---|---|
| SIZE | 1/4" SHEET | ISSUE 1-27-39 | J.W. |
| KIND | BLK. BAKELITE | CHANGED | |
| SHAPE | | " | |
| FINISH | | " | |
| TEMP. | | " | |
| PATT. | | " | |

**TITLE:** WALL MODEL DENTAL "X-RAY" SECONDARY COIL-VOLTAGE BARRIER

H. G. FISCHER & CO.
2335 WABANSIA AVE.
CHICAGO, ILL.

CAT. NO.

PART NO. 12384

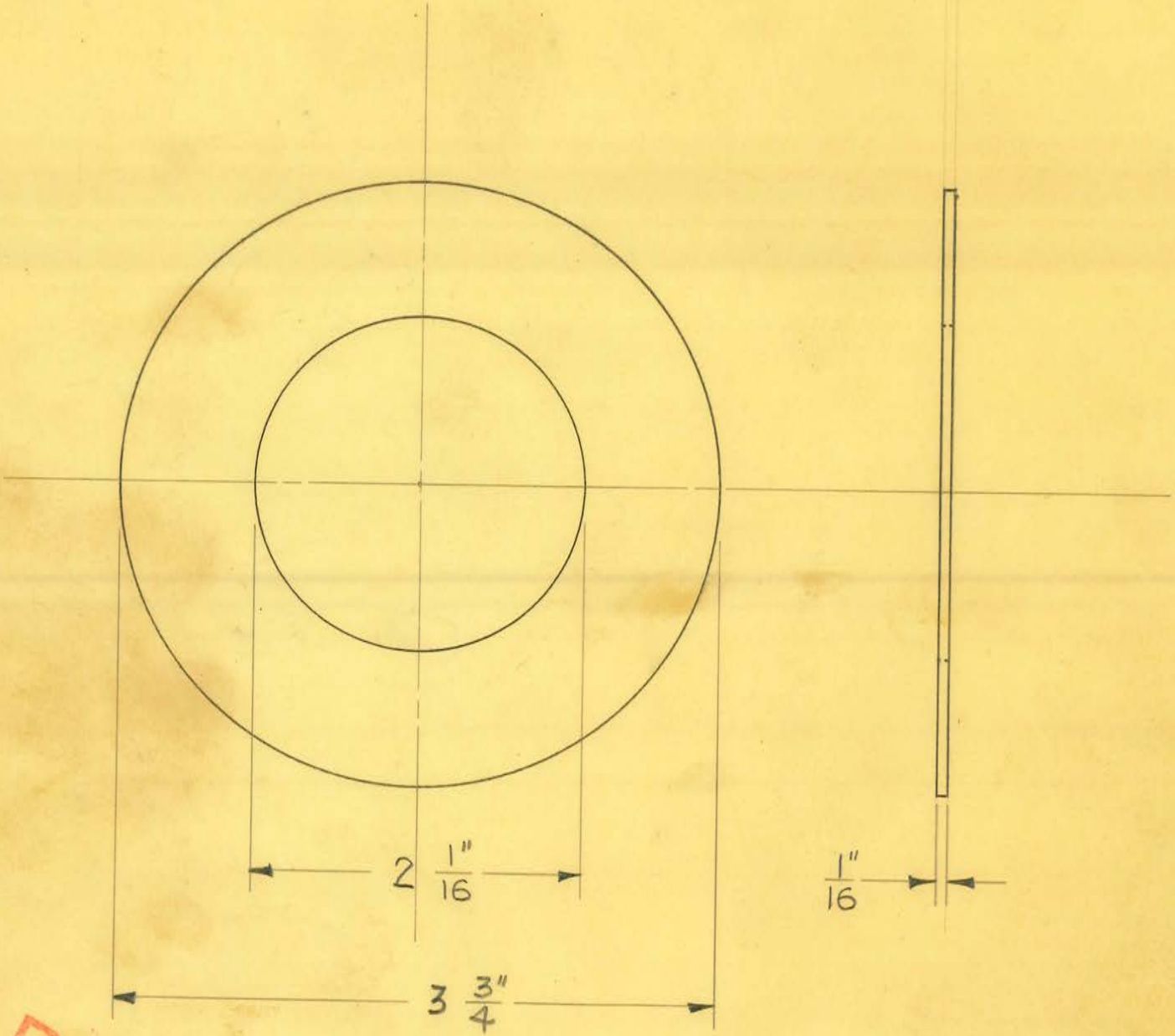


OBSOLETE

4 REQUIRED

Obsolete

| | | | |
|---|---|---|---|
| SIZE | 1/16" SHEET | ISSUE 11-21-41 | J.V.W. |
| KIND | BLK. BAKELITE | CHANGED | |
| SHAPE | | " | |
| FINISH | | " | |
| TEMP. | | " | |
| PATT. | | " | |

**TITLE:**
WALL MODEL DENTAL "X-RAY"
SECONDARY COIL - VOLTAGE BARRIER

H. G. FISCHER & CO.
2335 WABANSIA AVE.
CHICAGO, ILL.

CAT. NO.

PART NO. 12384A

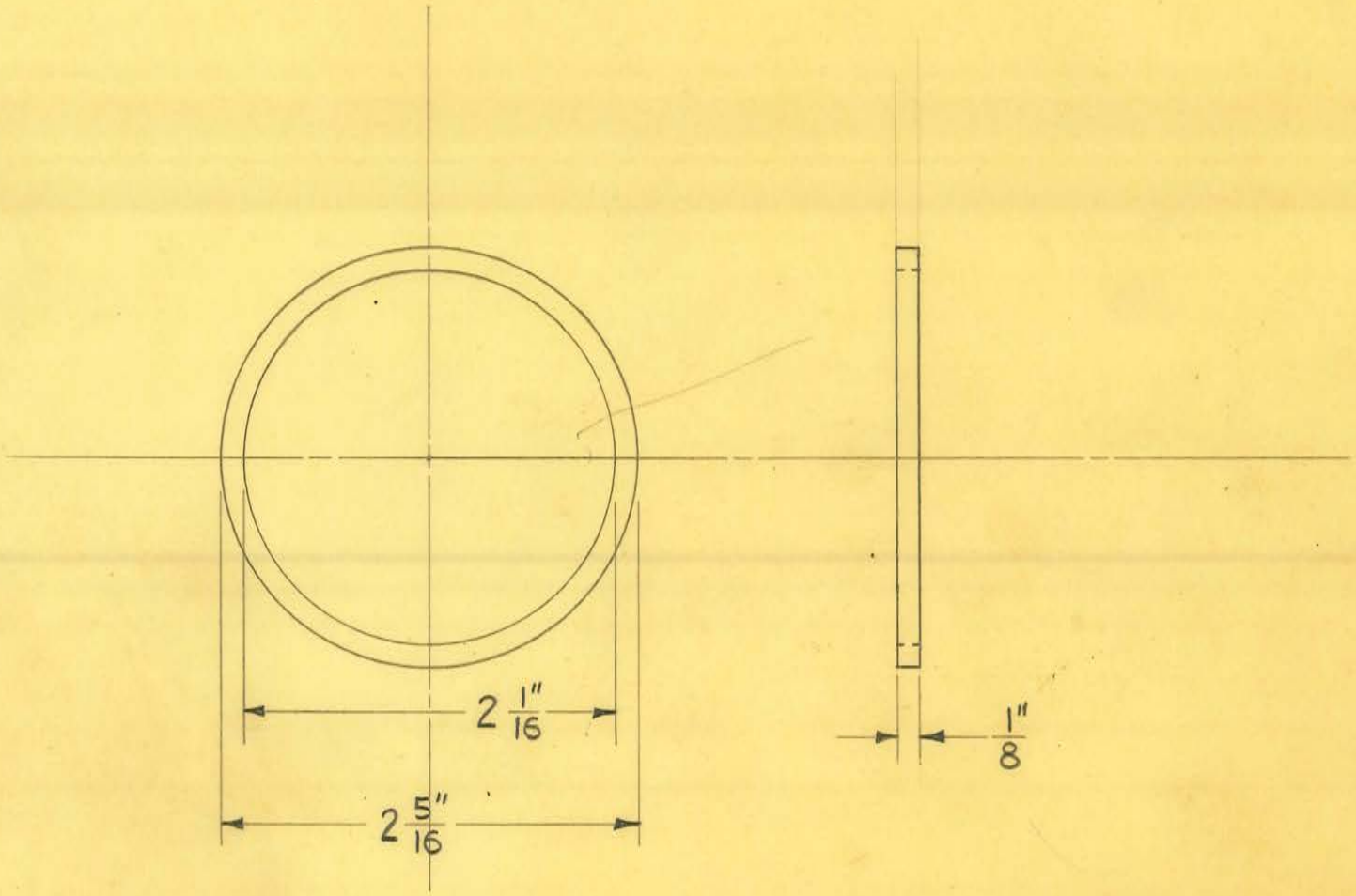


1 REQUIRED

OBSOLETE

obsolete

| | | | |
|---|---|---|---|
| SIZE | $2\frac{5}{16}$" O.D. X $2\frac{1}{16}$" I.D. | ISSUE 2-17-42 | J.V.W. |
| KIND | NAT. BAKELITE | CHANGED | |
| SHAPE | TUBING | " | |
| FINISH | | " | |
| TEMP. | | " | |
| PATT. | | " | |

**TITLE:**
FISCHER WALL MOD, D.X. X-RAY UNIT
SECONDARY COIL SEPERATOR – 1/8" THICK

H. G. FISCHER & CO.
2335 WABANSIA AVE.
CHICAGO, ILL.

CAT. NO.

PART NO. 12385 1/2

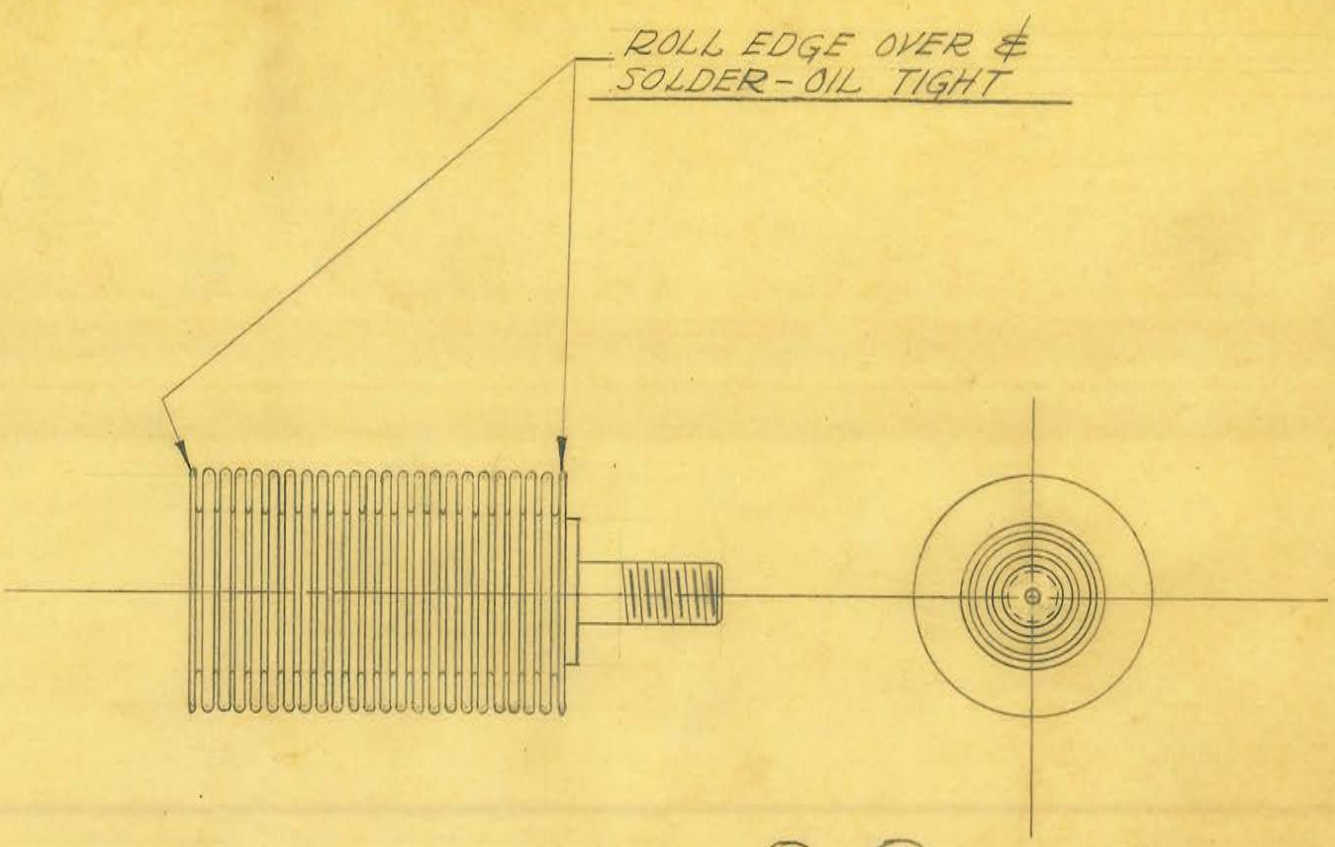


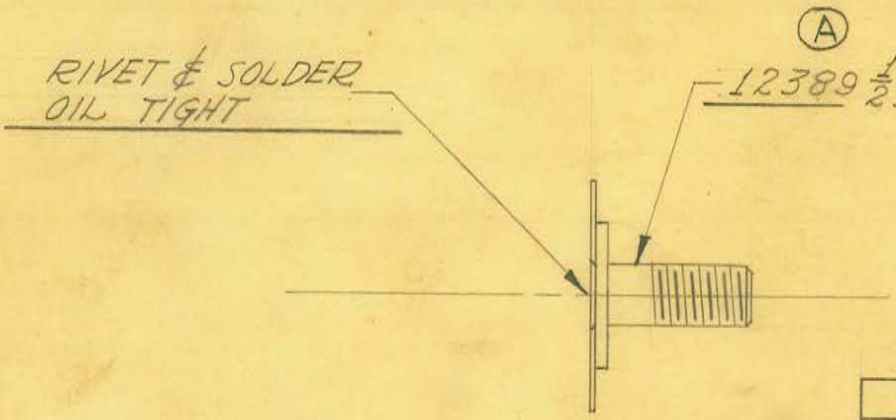


OBSOLETE

1 REQUIRED

FULTON SYLPHON # 98-VS - TO BE CHANGED ?

| REVISION | | DATE | BY |
|---|---|---|---|
| A | WAS # 12389 1/2 | 4-8-52 | J.V.W. |
| B | WAS # 12389 1/2 A | 10-27-53 | W.J. |

Obsolete

| | | | |
|---|---|---|---|
| SIZE | | ISSUE 4-20-39 | J.W. |
| KIND | | CHANGED | |
| SHAPE | | " | |
| FINISH | | " | |
| TEMP. | | " | |
| PATT. | | " | |

**TITLE:**
WALL MODEL DENTAL X-RAY UNIT
TRANSFORMER BELLOWS (LONG STUD)

H. G. FISCHER & CO.
2335 WABANSIA AVE.
CHICAGO, ILL.

CAT. NO.

PART NO. 12389GB

TITLE WALL MODEL DENTAL X-RAY UNIT
TRANSF. BELLOWS - SUPPORT BOLT

H. G. FISCHER & CO.
FRANKLIN PARK, ILLINOIS

PART NO. 12389 1/2 B

DATE 4-9-52 | DR. BY J.V.W. | CH'K'D.

| REVISION | DATE | BY |
|---|---|---|
| A WAS 5/16" X 27 | 10-27-53 | W.J. |

obsolete

PATTERN | FINISH | SCALE FULL

TOOLS | MATERIAL 3/4" DIA. BRASS ROD

DIMENSIONS UNLESS OTHERWISE SPECIFIED
FRACTIONAL ± .015
DECIMAL ± .005
ANGULAR ± 1/2°

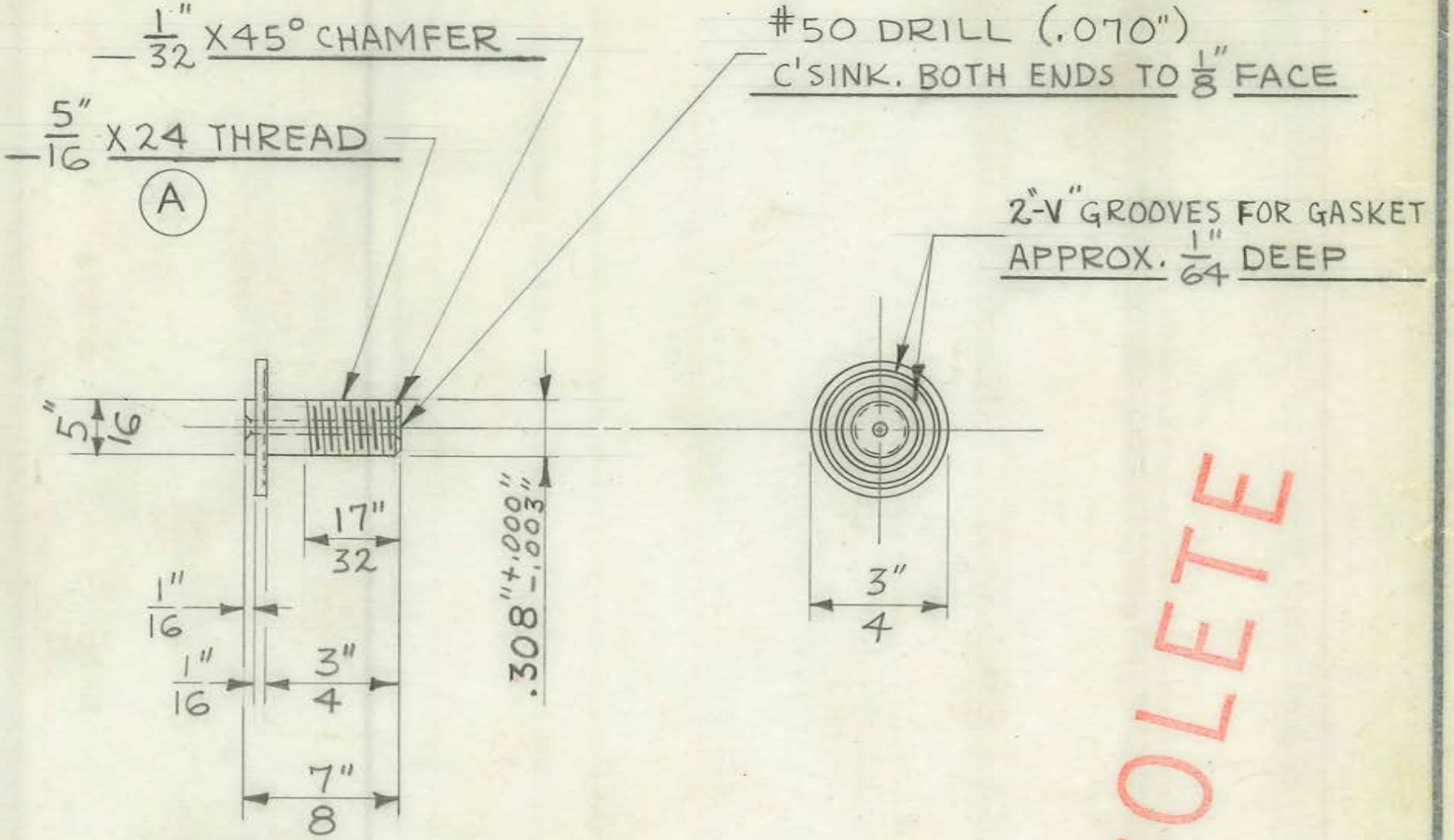


1 REQUIRED

OBSOLETE

FOLDER #99

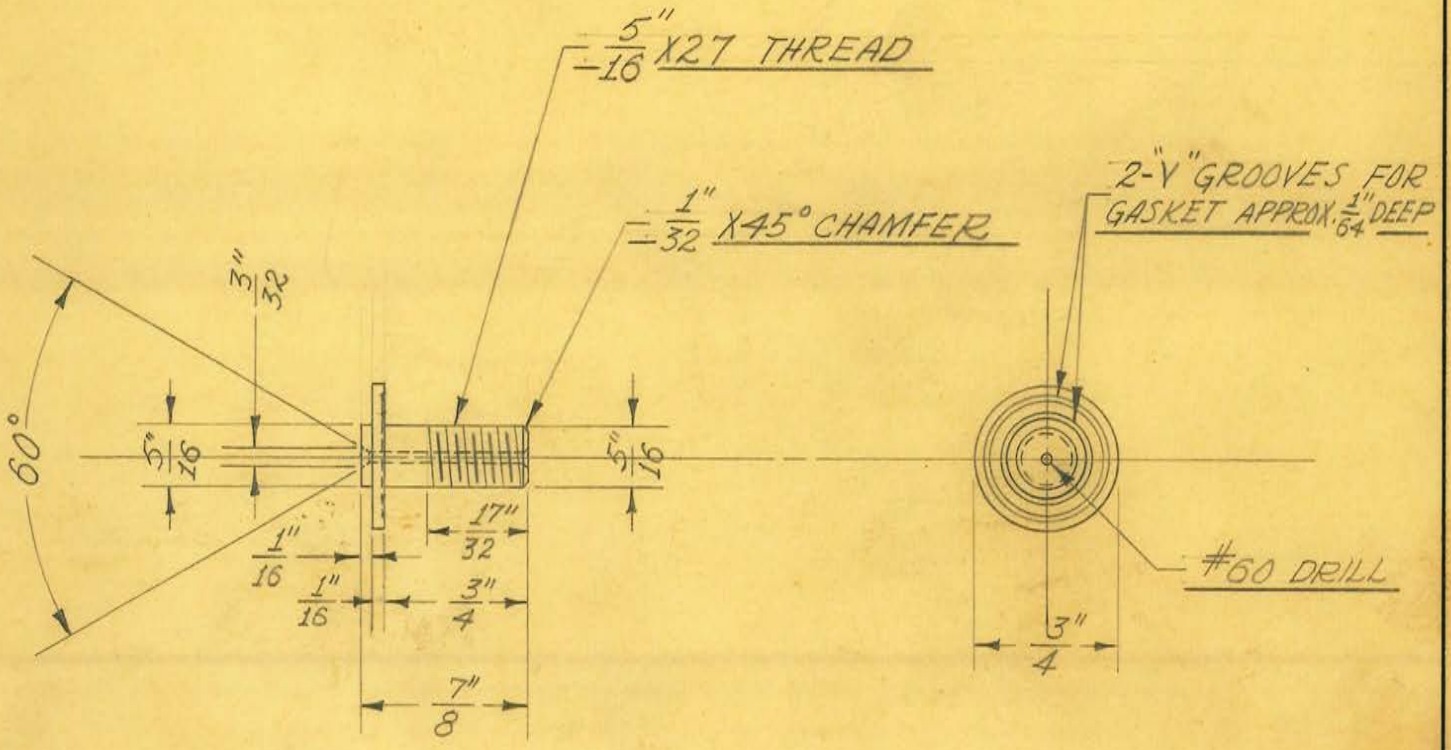


1 REQUIRED

OBSOLETE

obsolete 4-9-52

FULTON SYLPHON #10338

| | | | |
|---|---|---|---|
| SIZE | 3/4" DIAM. | ISSUE 3-19-39 | J.W. |
| KIND | BRASS ROD | CHANGED | |
| SHAPE | | " | |
| FINISH | | " | |
| TEMP. | | " | |
| PATT. | | " | |

**TITLE:** WALL MODEL DENTAL X-RAY UNIT
TRANSFORMER BELLOWS-SUPPORT BOLT -LONG

H. G. FISCHER & CO.
2335 WABANSIA AVE.
CHICAGO, ILL.

CAT. NO.

PART NO. 12389 1/2

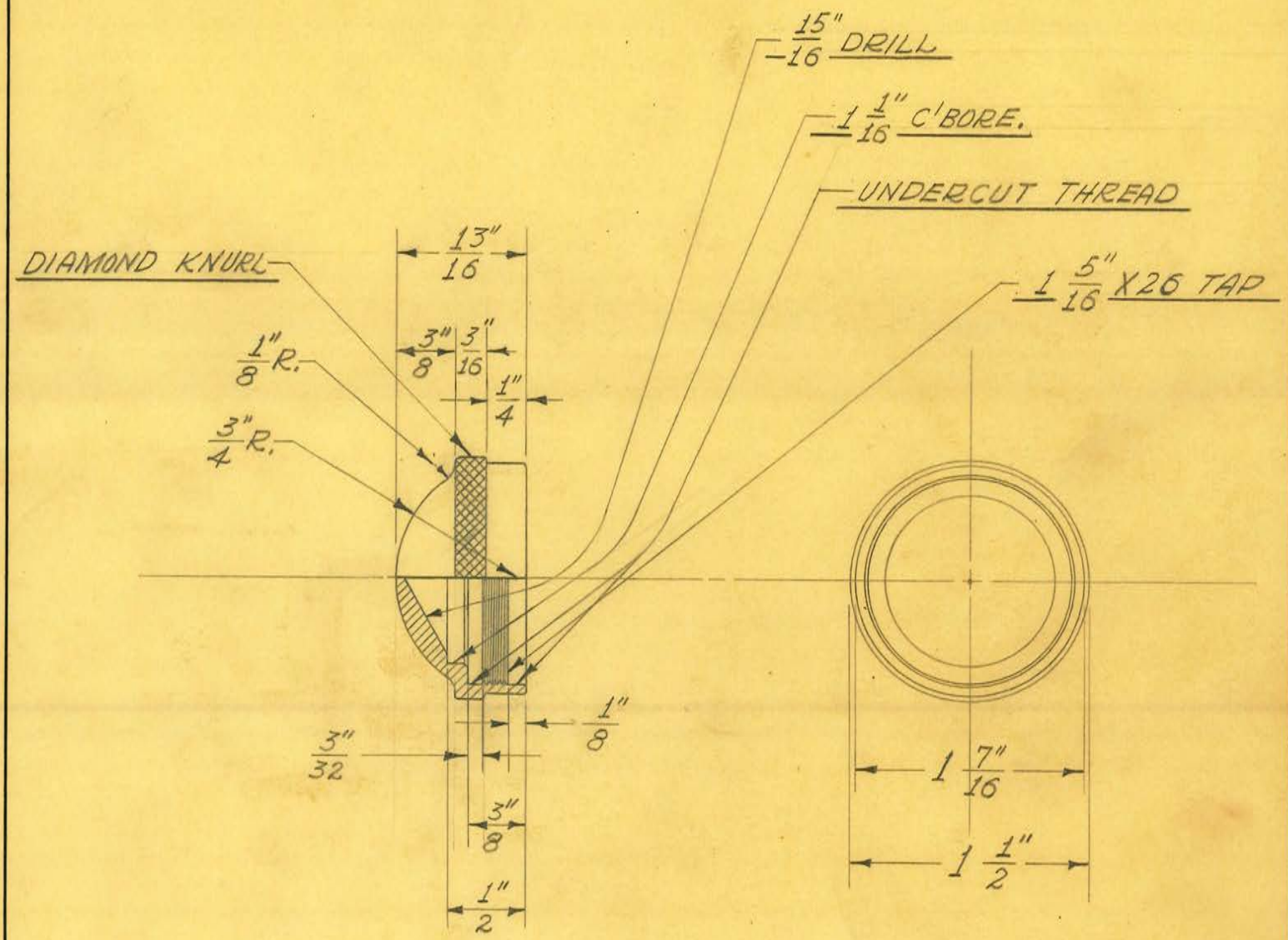


2 REQUIRED

OBSOLETE

Obsolete

| | | | |
|---|---|---|---|
| SIZE | 1½" DIAM. | ISSUE 2-24-39 | J.W. |
| KIND | BRASS ROD | CHANGED | |
| SHAPE | | " | |
| FINISH | CHROME #2 | " | |
| TEMP. | | " | |
| PATT. | | " | |

**TITLE:** WALL MODEL DENTAL "X-RAY" UNIT. COUNTERBALANCE TUBE CAP

H. G. FISCHER & CO.
2335 WABANSIA AVE.
CHICAGO, ILL.

CAT. NO.

PART NO. 12392

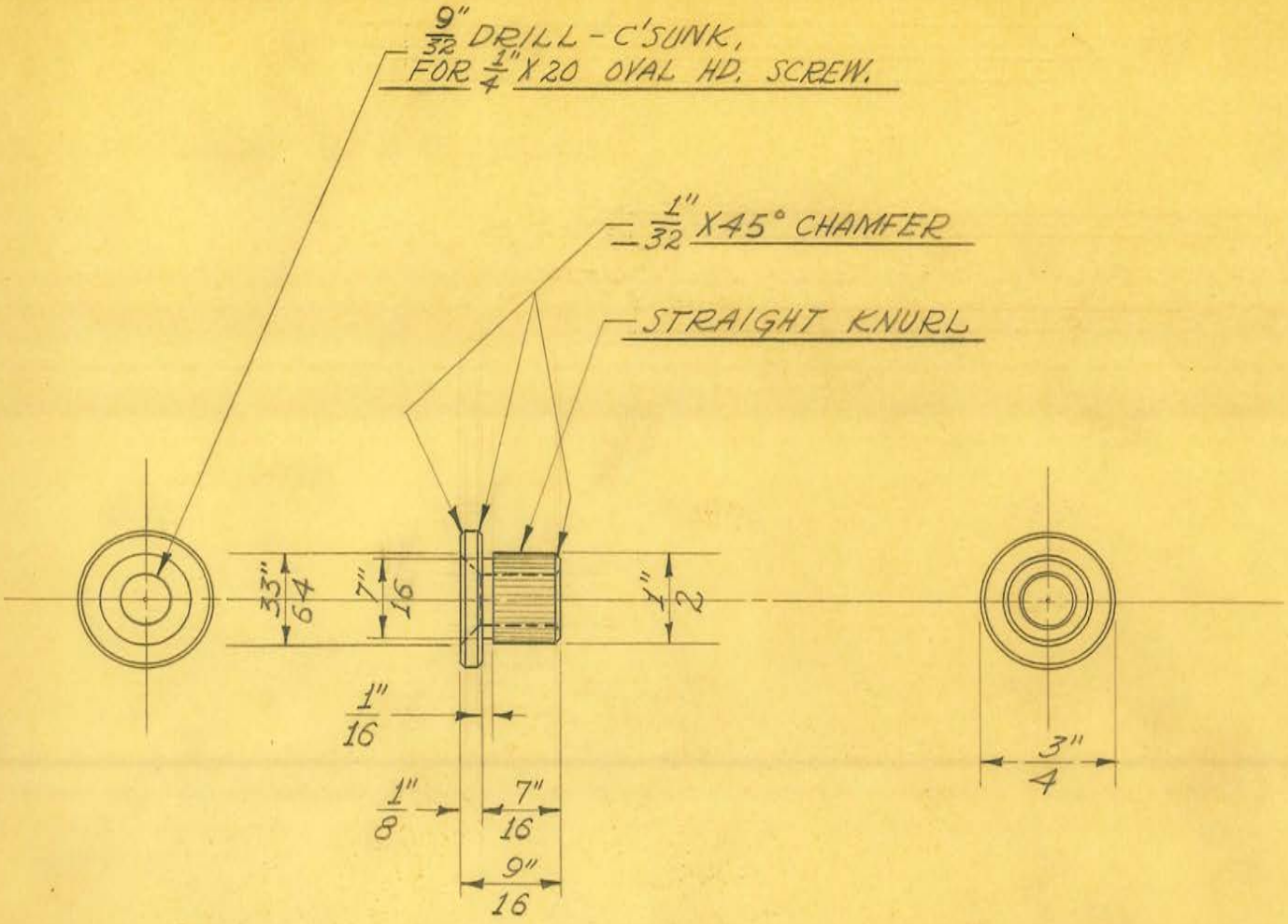


6 REQUIRED

OBSOLETE

| | | | |
|---|---|---|---|
| SIZE | 3/4" DIAM. | ISSUE 3-27-39 | J.W. |
| KIND | C.R. STEEL | CHANGED | |
| SHAPE | | " | |
| FINISH | CHROME #2 POL. HEAD ONLY | " | |
| TEMP. | | " | |
| PATT. | | " | |

**TITLE:** WALL MODEL DENTAL "X-RAY" UNIT MOUNTING BOARD INSERT

| | | |
|---|---|---|
| H. G. FISCHER & CO. 2335 WABANSIA AVE. CHICAGO, ILL. | CAT. NO. | PART NO. 12394 |

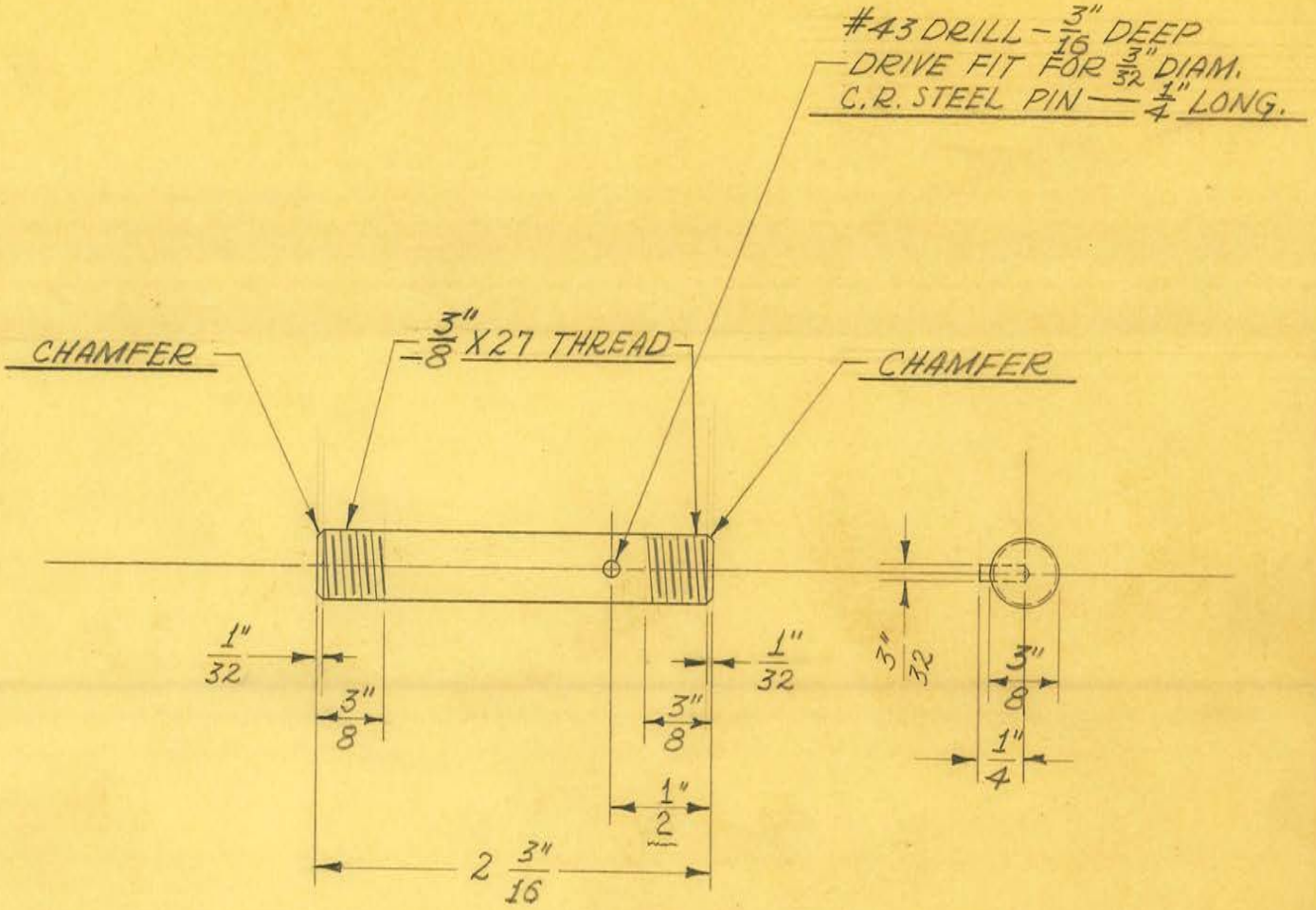


2 REQUIRED

OBSOLETE

Obsolete

| | | | |
|---|---|---|---|
| SIZE | 3/8" DIAM. | ISSUE 2-28-39 | J.W. |
| KIND | JEWELER'S | CHANGED | |
| SHAPE | ROD | " | |
| FINISH | DU-LITE #8 | " | |
| TEMP. | | " | |
| PATT. | | " | |

**TITLE:**
WALL MODEL DENTAL "X-RAY" UNIT
ARMS SWIVEL SHAFT — 2 3/16" LONG

H. G. FISCHER & CO.
2335 WABANSIA AVE.
CHICAGO, ILL.

CAT. NO.

PART NO. 12401G

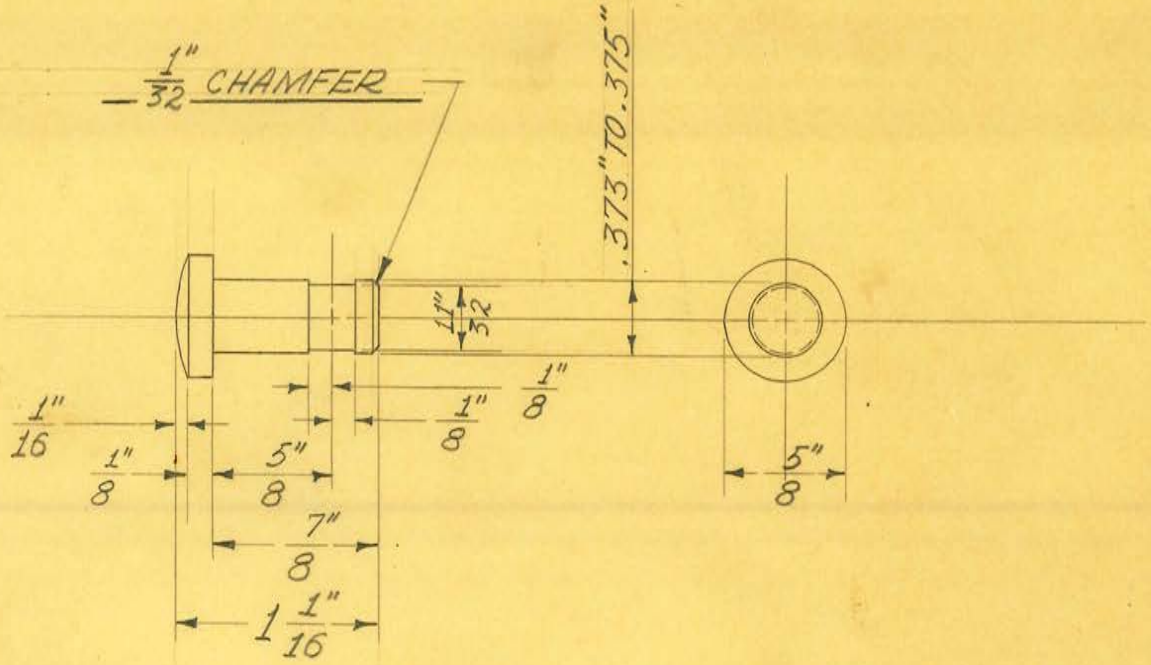


2 REQUIRED

OBSOLETE

Obsolete

| | | | |
|---|---|---|---|
| SIZE | 5/8" DIAM. | ISSUE 2-28-39 | J.W. |
| KIND | C.R. STEEL | CHANGED | |
| SHAPE | ROD | " | |
| FINISH | CHROME #2 POL. HEAD ONLY | " | |
| TEMP. | | " | |
| PATT. | | " | |

**TITLE:**
WALL MODEL DENTAL "X-RAY" UNIT
TRANSF. HEAD SUPPORT SWIVEL SHAFT

H. G. FISCHER & CO.
2335 WABANSIA AVE.
CHICAGO, ILL.

CAT. NO.

PART NO. 12402

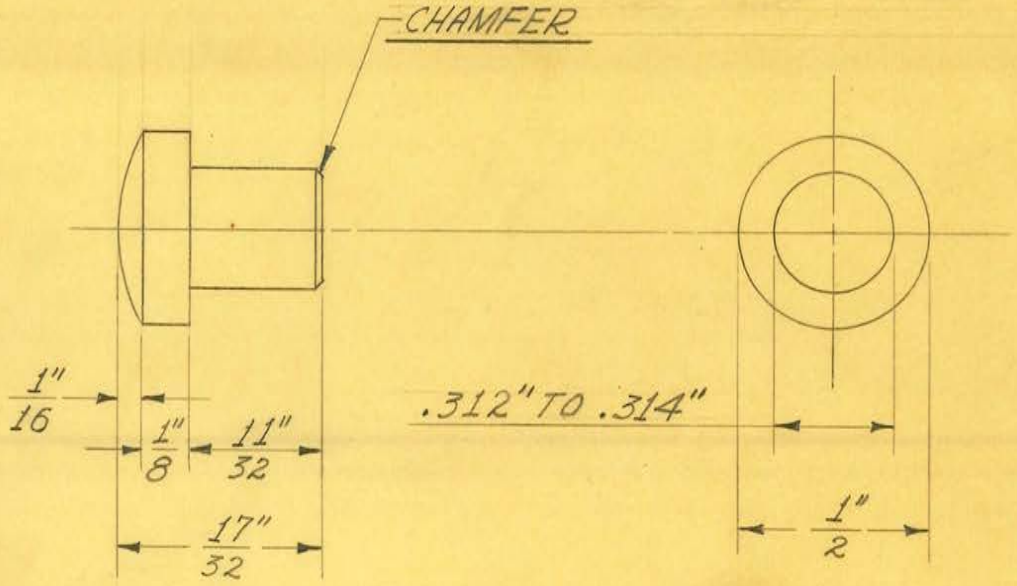


SCALE ÷ 2 DIAMETERS

2 REQUIRED

OBSOLETE

Obsolete

| | | | |
|---|---|---|---|
| SIZE | 1/2" DIAM. POL. | ISSUE 2-28-39 | J.W. |
| KIND | HARD. RUBBER | CHANGED | |
| SHAPE | ROD | " | |
| FINISH | POLISH HEAD | " | |
| TEMP. | | " | |
| PATT. | | " | |

**TITLE:**
WALL MODEL DENTAL "X-RAY" UNIT
TRANSFORMER SUPPORT ARM BUMPER

H. G. FISCHER & CO.
2335 WABANSIA AVE.
CHICAGO, ILL.

CAT. NO.

PART NO. 12405

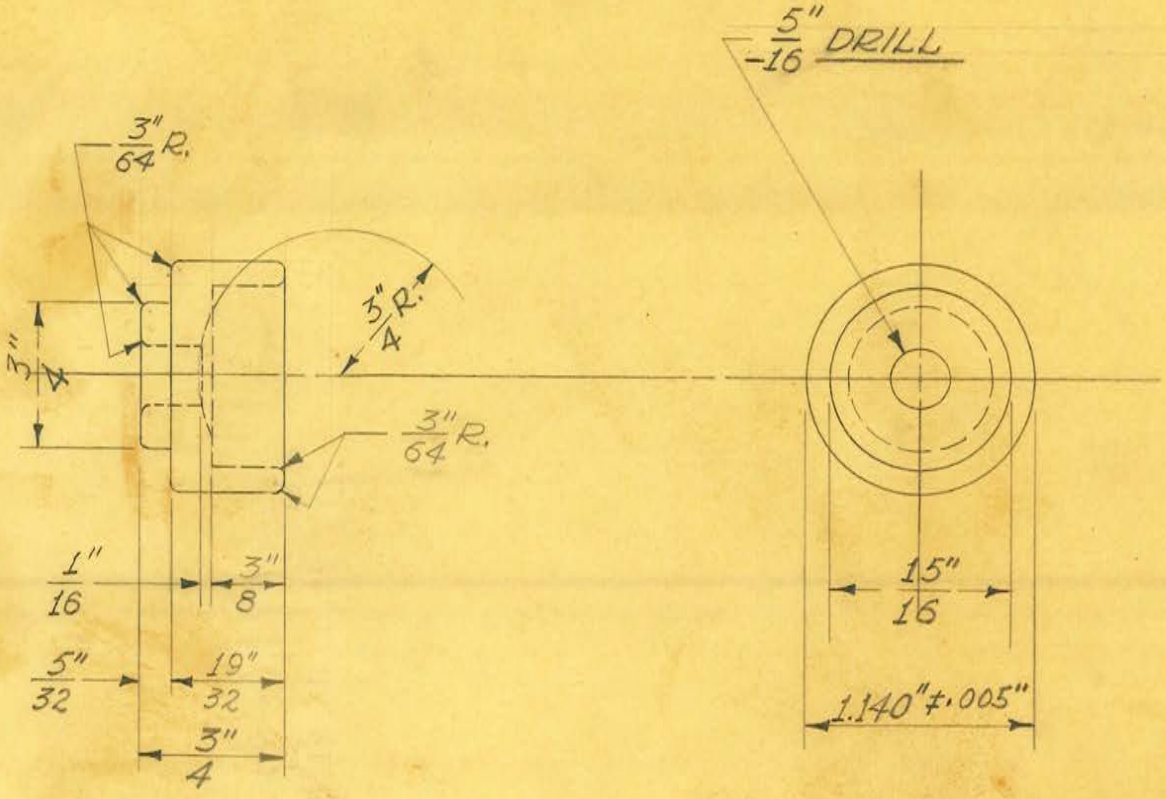


2 REQUIRED

OBSOLETE

Obsolete

| | | | |
|---|---|---|---|
| SIZE | 1 3/16" DIAM. | ISSUE 3-1-39 | J.W. |
| KIND | ALUMINUM | CHANGED 4-13-39 | J.W. |
| SHAPE | ROD | " | |
| FINISH | | " | |
| TEMP. | | " | |
| PATT. | | " | |

**TITLE:**
WALL MODEL DENTAL "X-RAY" UNIT
COUNTERBALANCE ROD GUIDE CUP

H. G. FISCHER & CO.
2335 WABANSIA AVE.
CHICAGO, ILL.

CAT. NO.

PART NO. 12407A

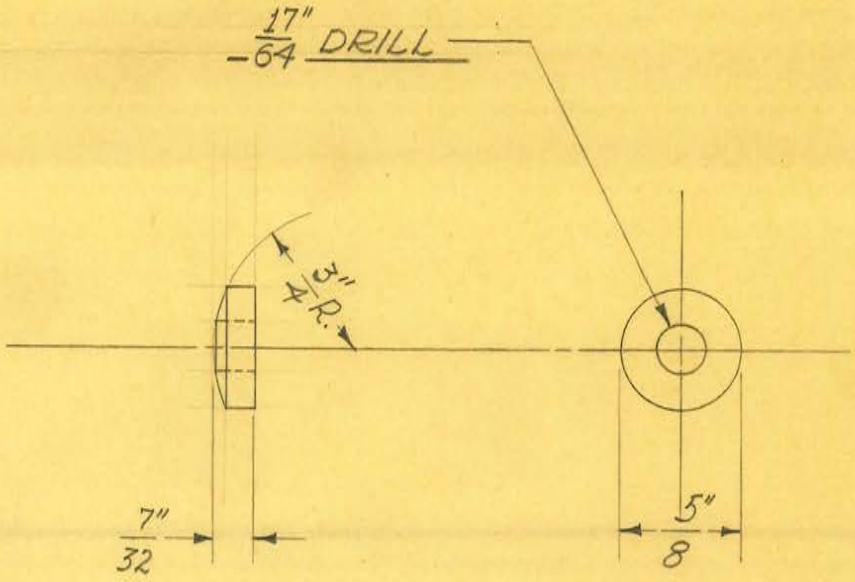


2 REQUIRED

OBSOLETE

Obsolete

| | | | |
|---|---|---|---|
| SIZE | 5/8" DIAM. | ISSUE 3-1-39 | J.W. |
| KIND | BRASS ROD | CHANGED | |
| SHAPE | | " | |
| FINISH | | " | |
| TEMP. | | " | |
| PATT. | | " | |

**TITLE:**
WALL MODEL DENTAL "X-RAY" UNIT
COUNTERBALANCE ROD SWIVEL WASHER

H. G. FISCHER & CO.
2335 WABANSIA AVE.
CHICAGO, ILL.

CAT. NO.

PART NO. 12408

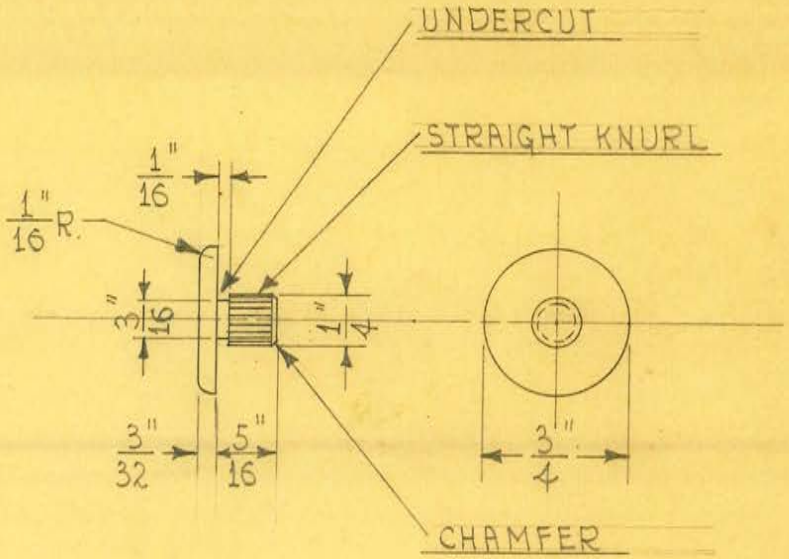


1 REQUIRED

OBSOLETE

Obsolete

| | | | | |
|---|---|---|---|---|
| SIZE | 3/4" DIAM. | ISSUE 2-28-39 | HE. | **TITLE:** WALL MODEL DENTAL X-RAY UNIT- TRANSF. SUPPORT ARM- LOWER - BUMPER BUTTON |
| KIND | BRASS ROD | CHANGED | | |
| SHAPE | | " | | |
| FINISH | CHROME #2 | " | | |
| TEMP. | | " | | |
| PATT. | | " | | |

H. G. FISCHER & CO.
2335 WABANSIA AVE.
CHICAGO, ILL.

CAT. NO.

PART NO. 12410

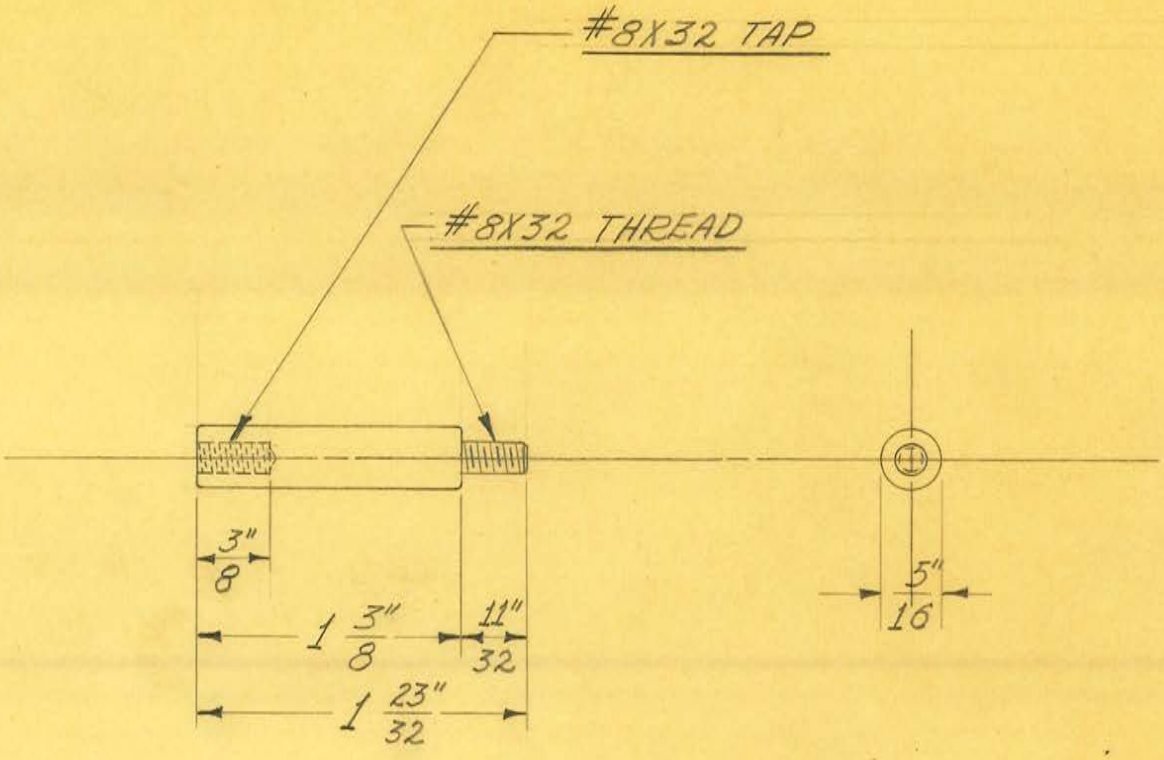


2 REQUIRED

OBSOLETE

| | | | |
|---|---|---|---|
| SIZE | 5/16" DIAM. | ISSUE 3-2-39 | J.W. |
| KIND | BRASS ROD | CHANGED | |
| SHAPE | | " | |
| FINISH | | " | |
| TEMP. | | " | |
| PATT. | | " | |

**TITLE:** WALL MODEL DENTAL "X-RAY" UNIT
CONTROL BOX RHEOSTAT MOUNTING SPACER

H. G. FISCHER & CO.
2335 WABANSIA AVE.
CHICAGO, ILL.

CAT. NO.

PART NO. 12411

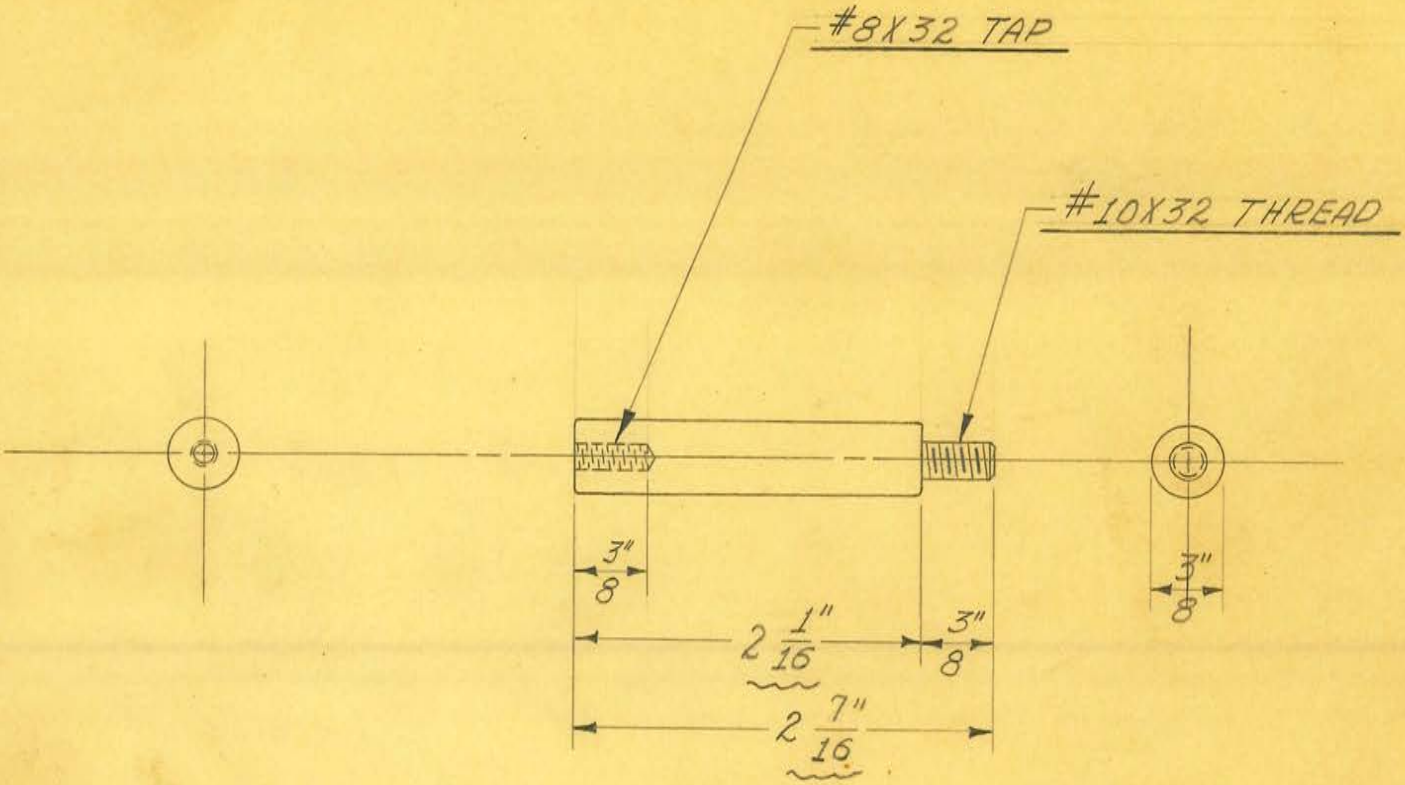


2 REQUIRED

OBSOLETE

| | | | |
|---|---|---|---|
| SIZE | 3/8" DIAM. | ISSUE 3-2-39 | J.W. |
| KIND | BRASS ROD | CHANGED | |
| SHAPE | | " | |
| FINISH | | " | |
| TEMP. | | " | |
| PATT. | | " | |

**TITLE:**
WALL MODEL DENTAL "X-RAY" UNIT
CONTROL BOX TRANSFORMER SUPPORT SPACER

H. G. FISCHER & CO.
2335 WABANSIA AVE.
CHICAGO, ILL.

CAT. NO.

PART NO. 12412

#18 DRILL SIZE

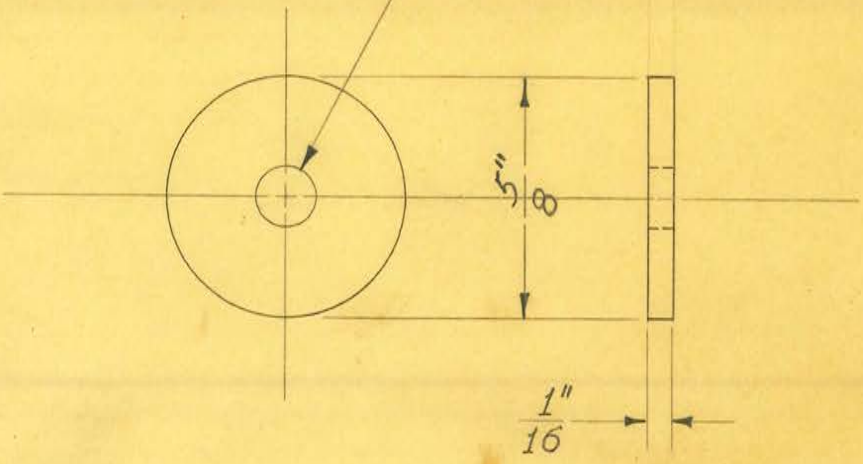


SCALE ~ DOUBLE SIZE

5 REQUIRED

OBSOLETE

Obsolete

| | | | |
|---|---|---|---|
| SIZE | 1/16" SHEET | ISSUE 3-3-39 | J.W. |
| KIND | VELLUMOID | CHANGED | |
| SHAPE | | " | |
| FINISH | | " | |
| TEMP. | | " | |
| PATT. | | " | |

**TITLE:**
WALL MODEL DENTAL X-RAY UNIT
TERMINAL STUD GASKET

H. G. FISCHER & CO.
2335 WABANSIA AVE.
CHICAGO, ILL.

CAT. NO.

PART NO. 12414

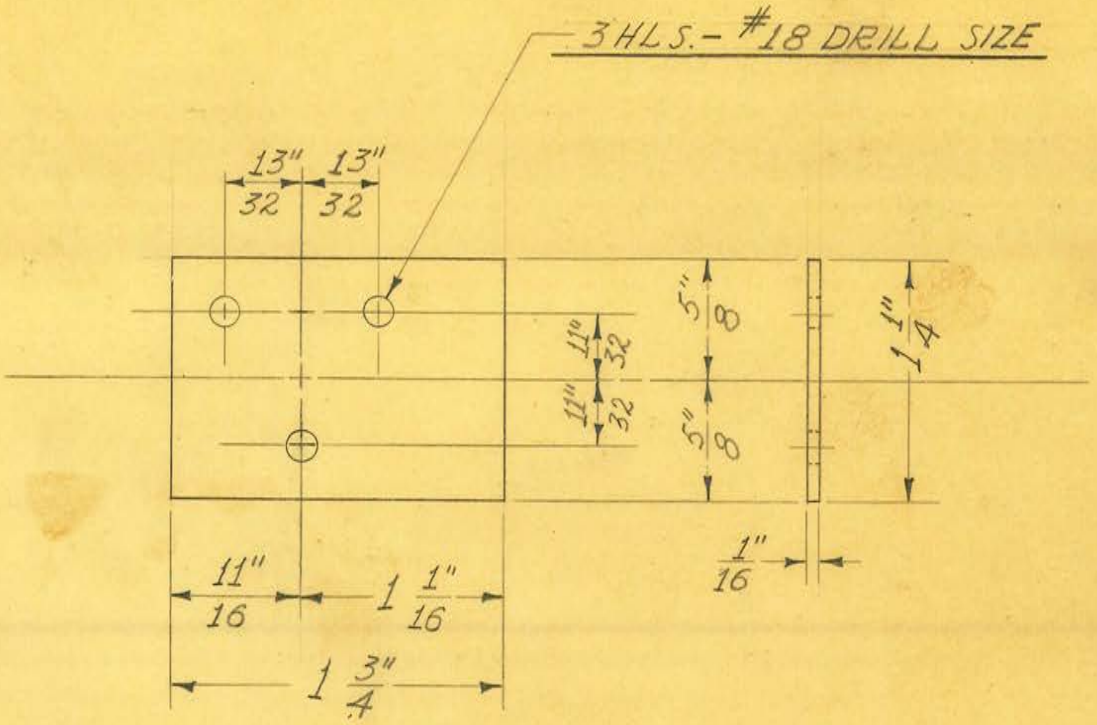


1 REQUIRED

OBSOLETE

Obsolete

| | | | | |
|---|---|---|---|---|
| SIZE | 1/16" SHEET | ISSUE 3-4-39 | J.W. | TITLE: WALL MODEL DENTAL "X-RAY" UNIT TRANSFORMER SUPPORT-LEFT-GASKET |
| KIND | VELUMOID | CHANGED 5-5-39 | H.E. | |
| SHAPE | | " 11-8-39 | J.W. | |
| FINISH | | " 8-9-40 | J.W. | |
| TEMP. | | " | | |
| PATT. | | " | | |

H. G. FISCHER & CO.
2335 WABANSIA AVE.
CHICAGO, ILL.

CAT. NO.

PART NO. 12415C

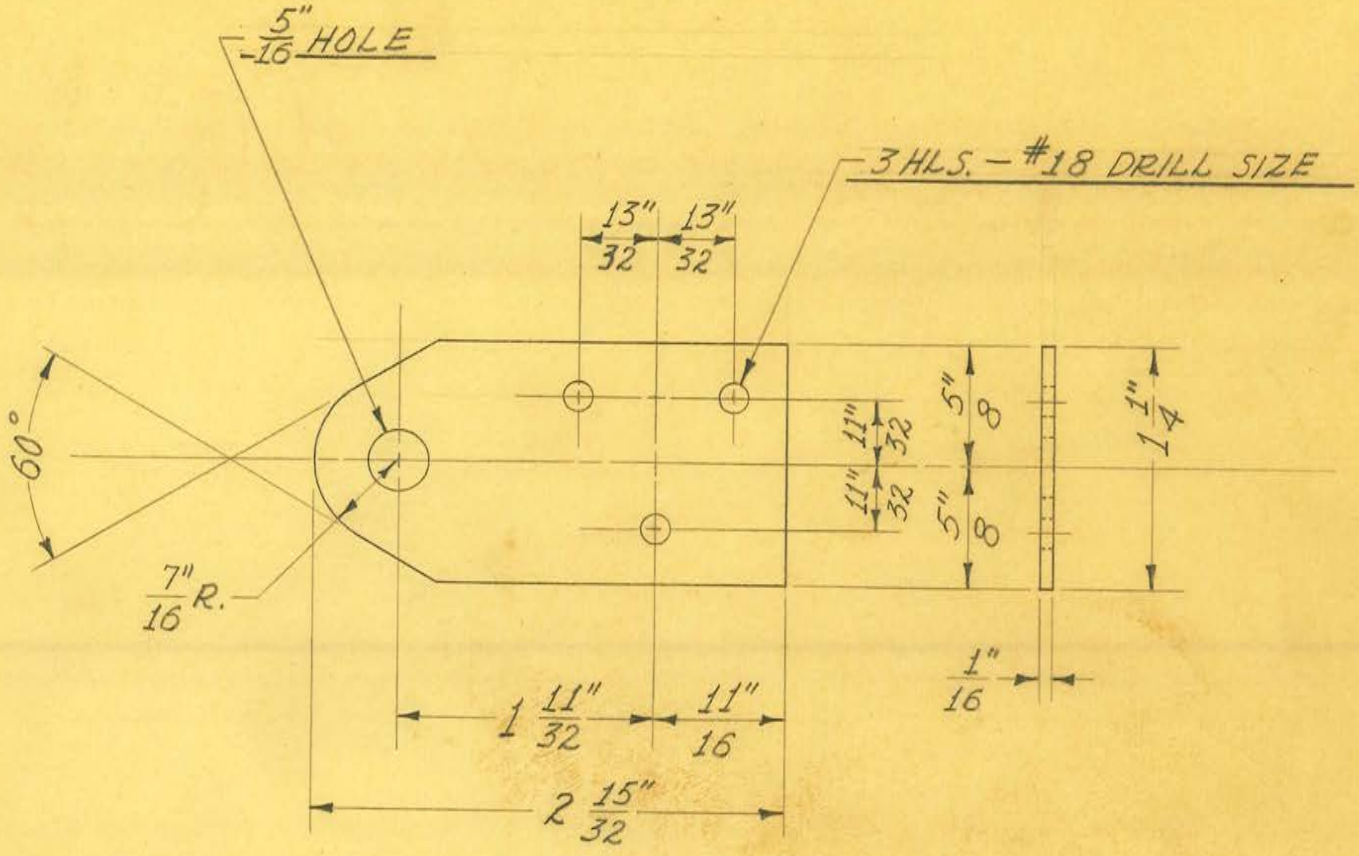


1 REQUIRED

OBSOLETE

Obsolete

| | | | | |
|---|---|---|---|---|
| SIZE | 1/16" SHEET | ISSUE 3-4-39 | J.W. | **TITLE:** WALL MODEL DENTAL X-RAY UNIT TRANSFORMER SUPPORT-RIGHT- GASKET |
| KIND | CORPERENE | CHANGED 5-5-39 | H.E. | |
| SHAPE | | " 11-8-39 | J.W. | |
| FINISH | | " | | |
| TEMP. | | " | | |
| PATT. | | " | | |

H. G. FISCHER & CO.
2335 WABANSIA AVE.
CHICAGO, ILL.

CAT. NO.

PART NO. 12416B

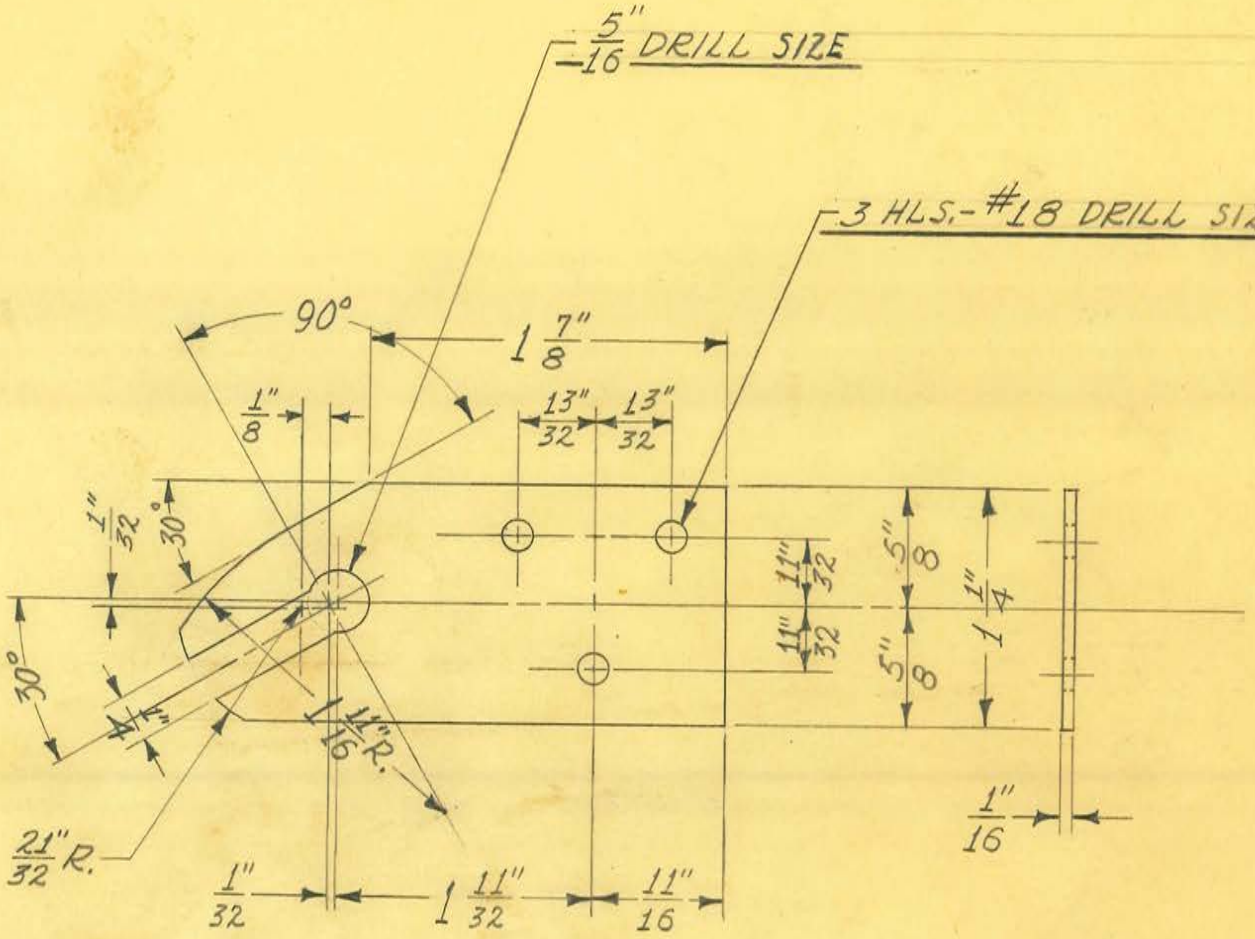


1 REQUIRED

OBSOLETE

Absolete

| | | | | |
|---|---|---|---|---|
| SIZE | 1/16" SHEET | ISSUE 2-22-40 | J.W. | **TITLE:** FISCHER WALL MODEL DENTAL "X-RAY" UNIT TRANSFORMER SUPPORT - RIGHT - GASKET |
| KIND | VELUMOID | CHANGED 8-9-40 | J.W. | |
| SHAPE | | " | | |
| FINISH | | " | | |
| TEMP. | | " | | |
| PATT. | | " | | |

H. G. FISCHER & CO.
2335 WABANSIA AVE.
CHICAGO, ILL.

CAT. NO.

PART NO. 12416D

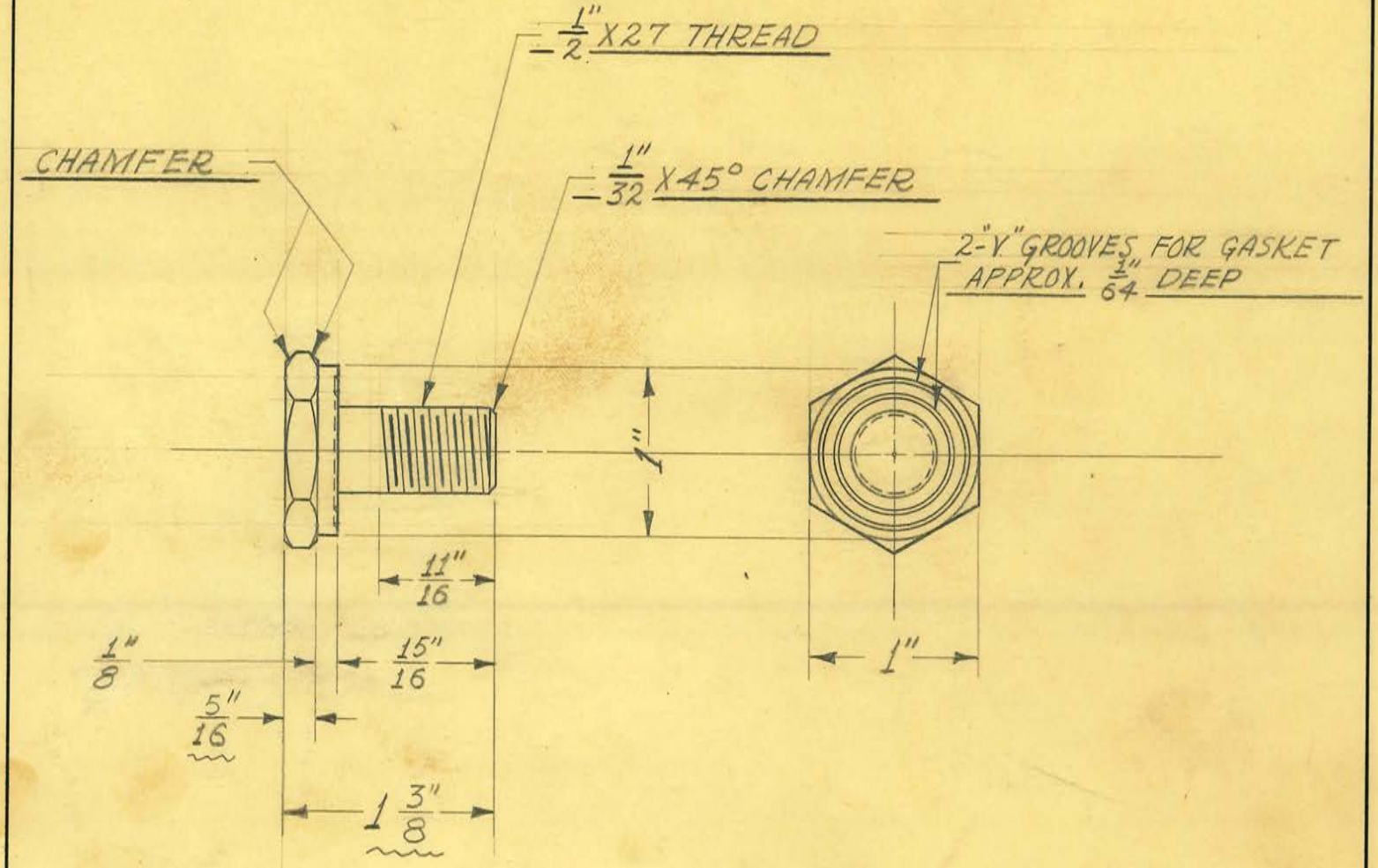


1 REQUIRED

OBSOLETE

| | | | |
|---|---|---|---|
| SIZE | 1" HEX. | ISSUE 2-1-40 | J.W. |
| KIND | BRASS ROD | CHANGED | |
| SHAPE | | " | |
| FINISH | | " | |
| TEMP. | | " | |
| PATT. | | " | |

**TITLE:** FISCHER MOD. "GF-15" S.P. FLUOROSCOPE TRANSF. OIL PLUG

H. G. FISCHER & CO.
2335 WABANSIA AVE.
CHICAGO, ILL.

CAT. NO.

PART NO. 11448A

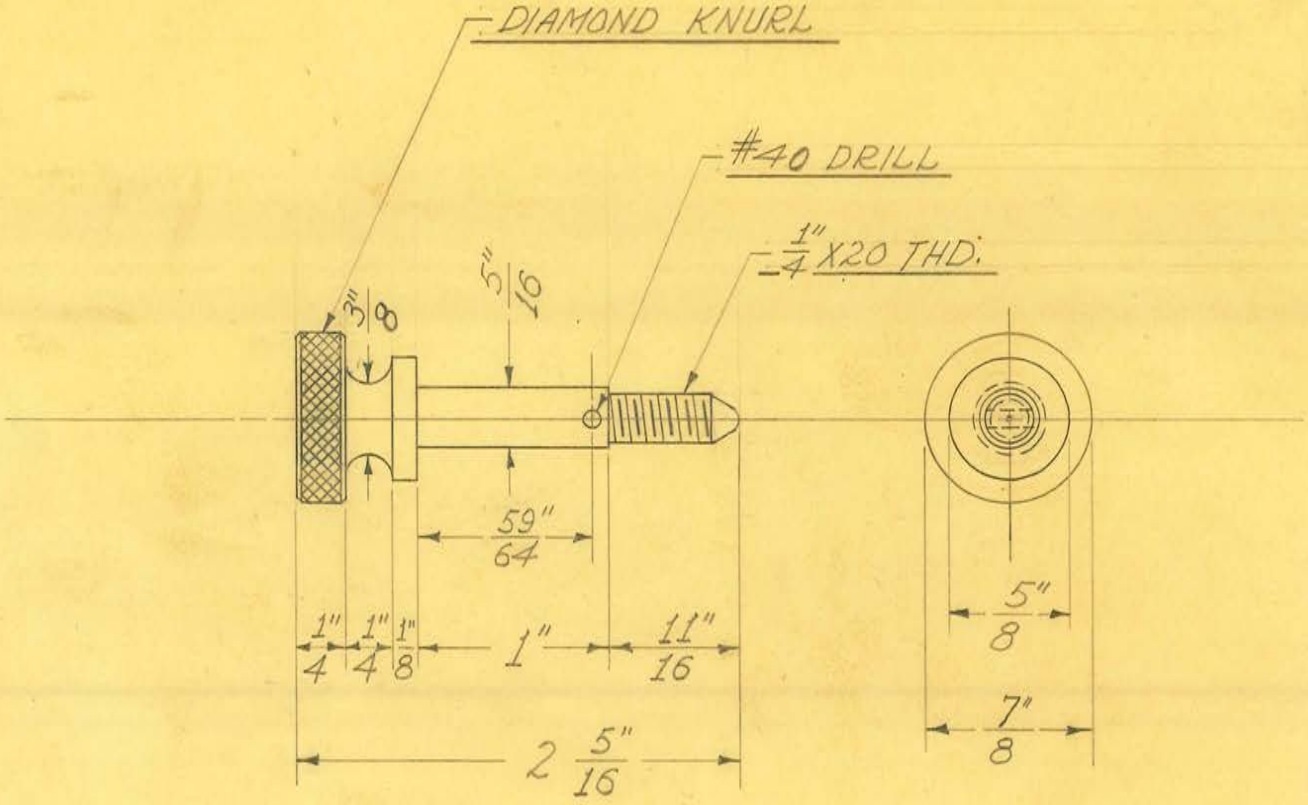


2 REQUIRED

OBSOLETE

| | | | |
|---|---|---|---|
| SIZE | 7/8" DIAM. | ISSUE 5-2-38 | J.W. |
| KIND | BRASS | CHANGED | |
| SHAPE | ROD | " | |
| FINISH | CAD. #23 | " | |
| TEMP. | | " | |
| PATT. | | " | |

**TITLE:** FISCHER MOD. "G" SHOCKPROOF FLUOROSCOPE REMOTE CONTROL – HOUSING CLAMP SCREW

H. G. FISCHER & CO.
2335 WABANSIA AVE.
CHICAGO, ILL.

CAT. NO.

PART NO. 11455

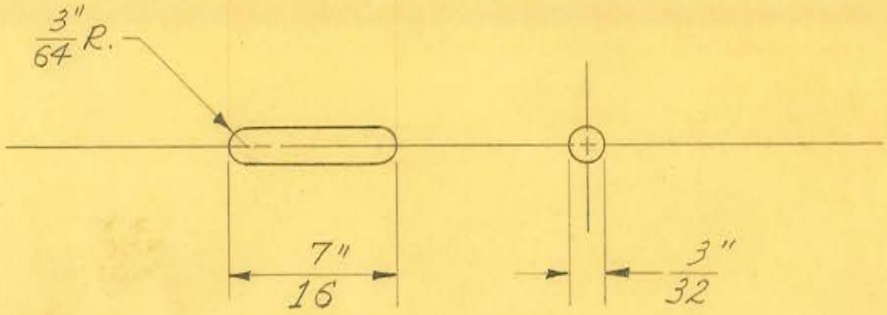


SCALE ~ 2 DIAMETERS

2 REQUIRED

OBSOLETE

Obsolete

| | | | |
|---|---|---|---|
| SIZE | 3/32" DIAM. | ISSUE 5-2-38 | J.W. |
| KIND | C.R. STEEL | CHANGED | |
| SHAPE | ROD | " | |
| FINISH | CAD. #23 | " | |
| TEMP. | | " | |
| PATT. | | " | |

**TITLE:** FISCHER MOD. "G" SHOCKPROOF FLUOROSCOPE REMOTE CONTROL - HOUSING CLAMP SCREW PIN

H. G. FISCHER & CO.
2335 WABANSIA AVE.
CHICAGO, ILL.

CAT. NO.

PART NO. 11456

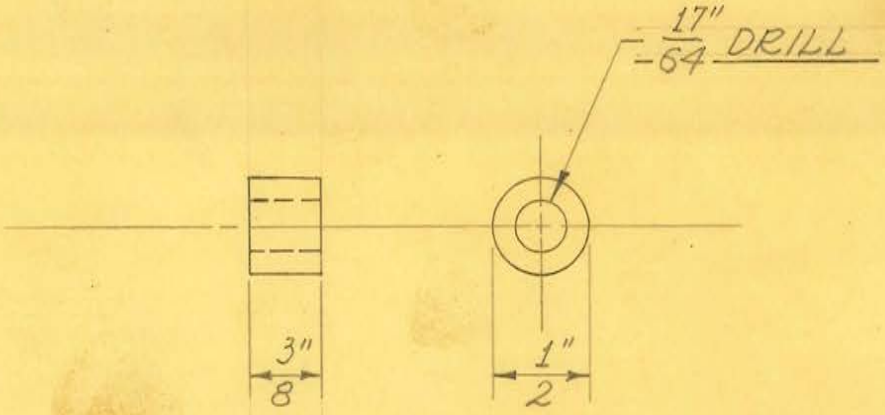


4 REQUIRED

OBSOLETE

| | | | |
|---|---|---|---|
| SIZE | 1/2" DIAM. | ISSUE 5-2-38 | J.W. |
| KIND | BRASS ROD | CHANGED | |
| SHAPE | | " | |
| FINISH | | " | |
| TEMP. | | " | |
| PATT. | | " | |

**TITLE:** FISCHER MOD. "G" SHOCKPROOF FLUOROSCOPE REMOTE CONTROL – TRANSF. & TERM. BOARD SUPP SPACER

H. G. FISCHER & CO.
2335 WABANSIA AVE.
CHICAGO, ILL.

CAT. NO.

PART NO. 11461

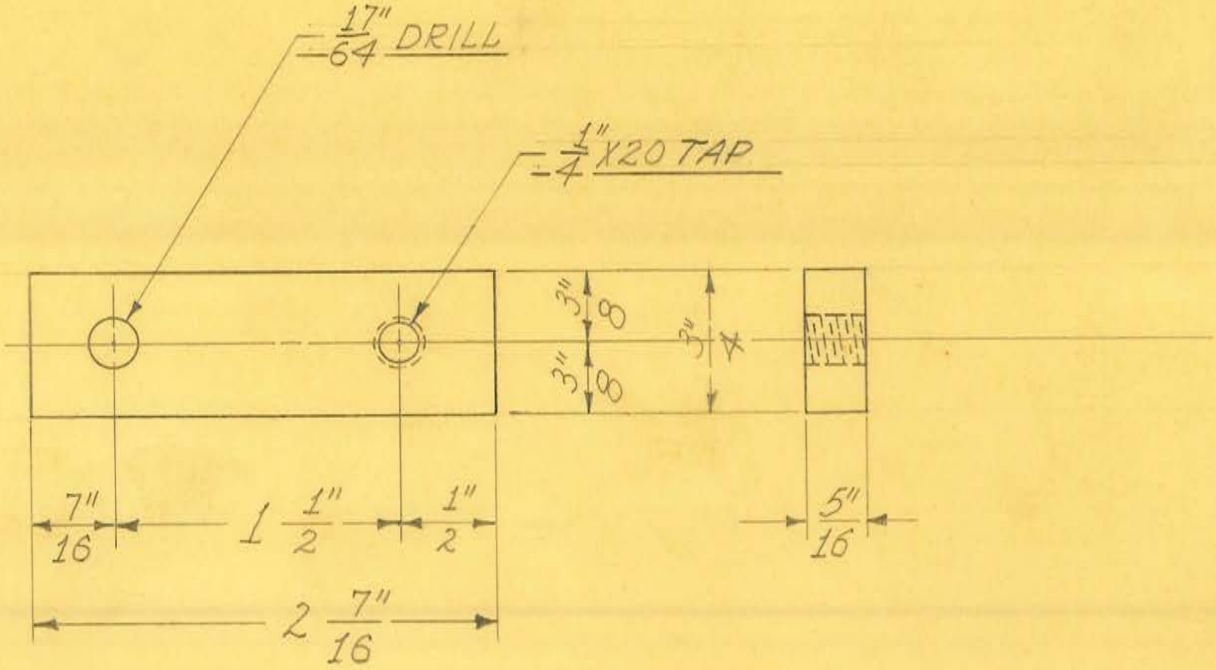


2 REQUIRED

OBSOLETE

| | | | | |
|---|---|---|---|---|
| SIZE | 3/4" X 5/16" | ISSUE 4-29-38 | J.W. | TITLE: FISCHER MOD. "G" SHOCKPROOF FLUOROSCOPE REMOTE CONTROL TRANSF. & TERM. BD. SUPP.-FRONT |
| KIND | C.R. STEEL | CHANGED | | |
| SHAPE | BAR | " | | |
| FINISH | | " | | |
| TEMP. | | " | | |
| PATT. | | " | | |

H. G. FISCHER & CO.
2335 WABANSIA AVE.
CHICAGO, ILL.

CAT. NO.

PART NO. 11462

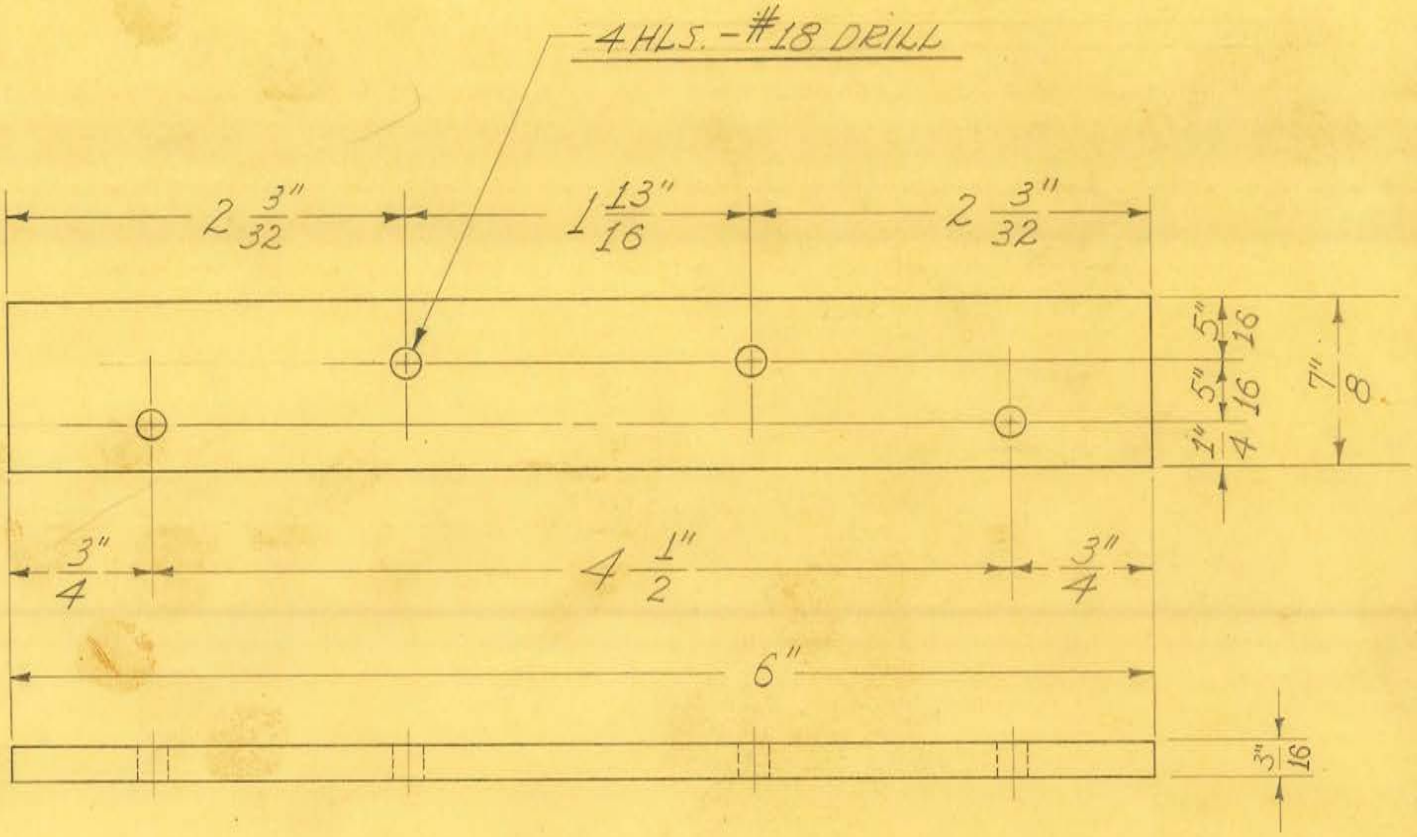


1 REQUIRED

OBSOLETE

| | | | |
|---|---|---|---|
| SIZE | 3/16" SHEET | ISSUE 4-29-38 | J. W. |
| KIND | BAKELITE | CHANGED | |
| SHAPE | | " | |
| FINISH | | " | |
| TEMP. | | " | |
| PATT. | | " | |

**TITLE:** FISCHER MOD. "G" SHOCKPROOF FLUOROSCOPE REMOTE CONTROL - PILOT LIGHT MTG. STRIP

H. G. FISCHER & CO.
2335 WABANSIA AVE.
CHICAGO, ILL.

CAT. NO.

PART NO. 11465

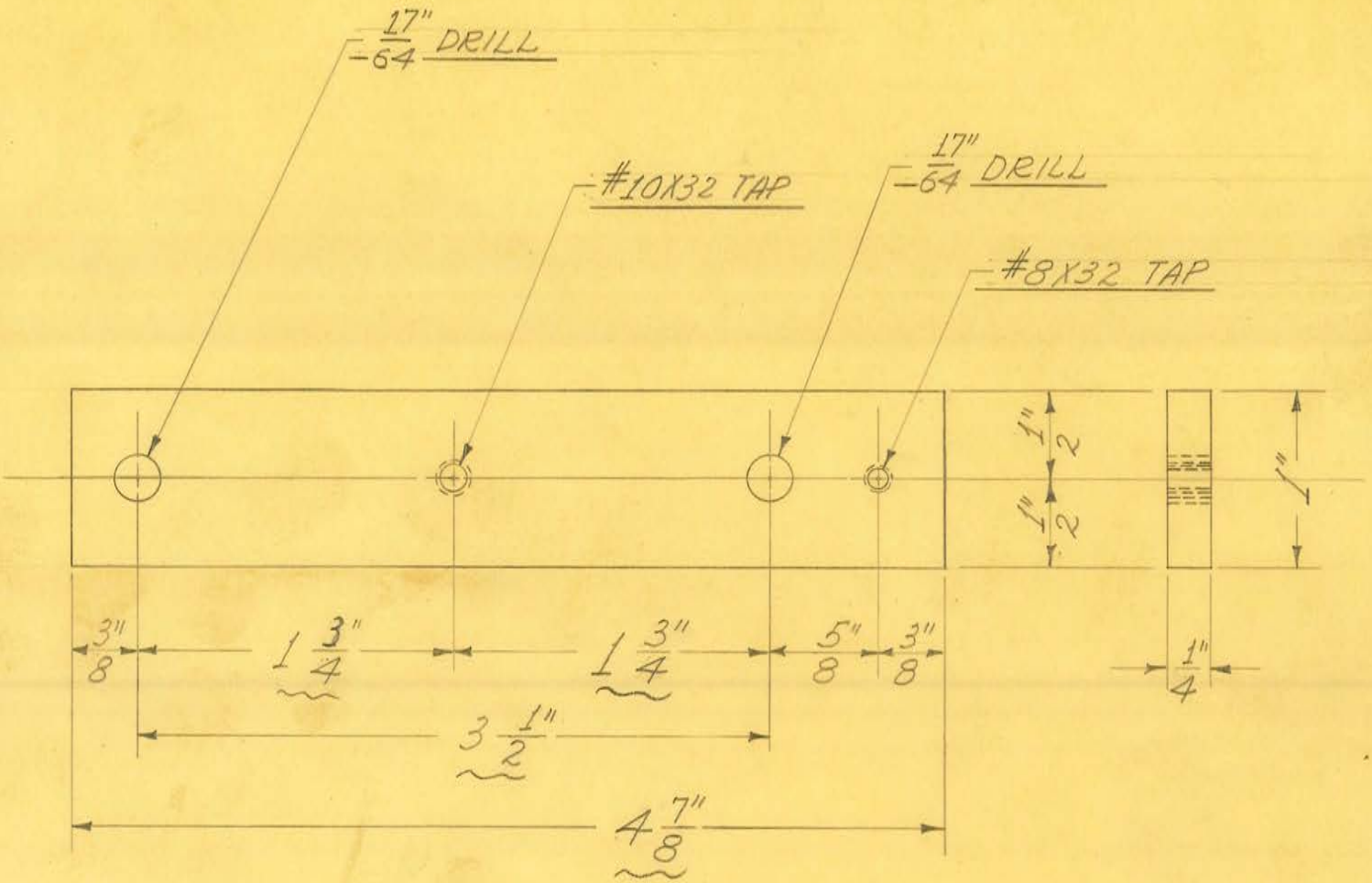


2 REQUIRED

OBSOLETE

| | | | |
|---|---|---|---|
| SIZE | 1"X 1/4" | ISSUE 4-28-38 | J.W. |
| KIND | C.R. STEEL | CHANGED | |
| SHAPE | BAR | " | |
| FINISH | | " | |
| TEMP. | | " | |
| PATT. | | " | |

**TITLE:** FISCHER MOD. "G" SHOCKPROOF FLUOROSCOPE REMOTE CONTROL - TRANSF. SUPP. - LOWER

H. G. FISCHER & CO.
2335 WABANSIA AVE.
CHICAGO, ILL.

CAT. NO.

PART NO. 11466

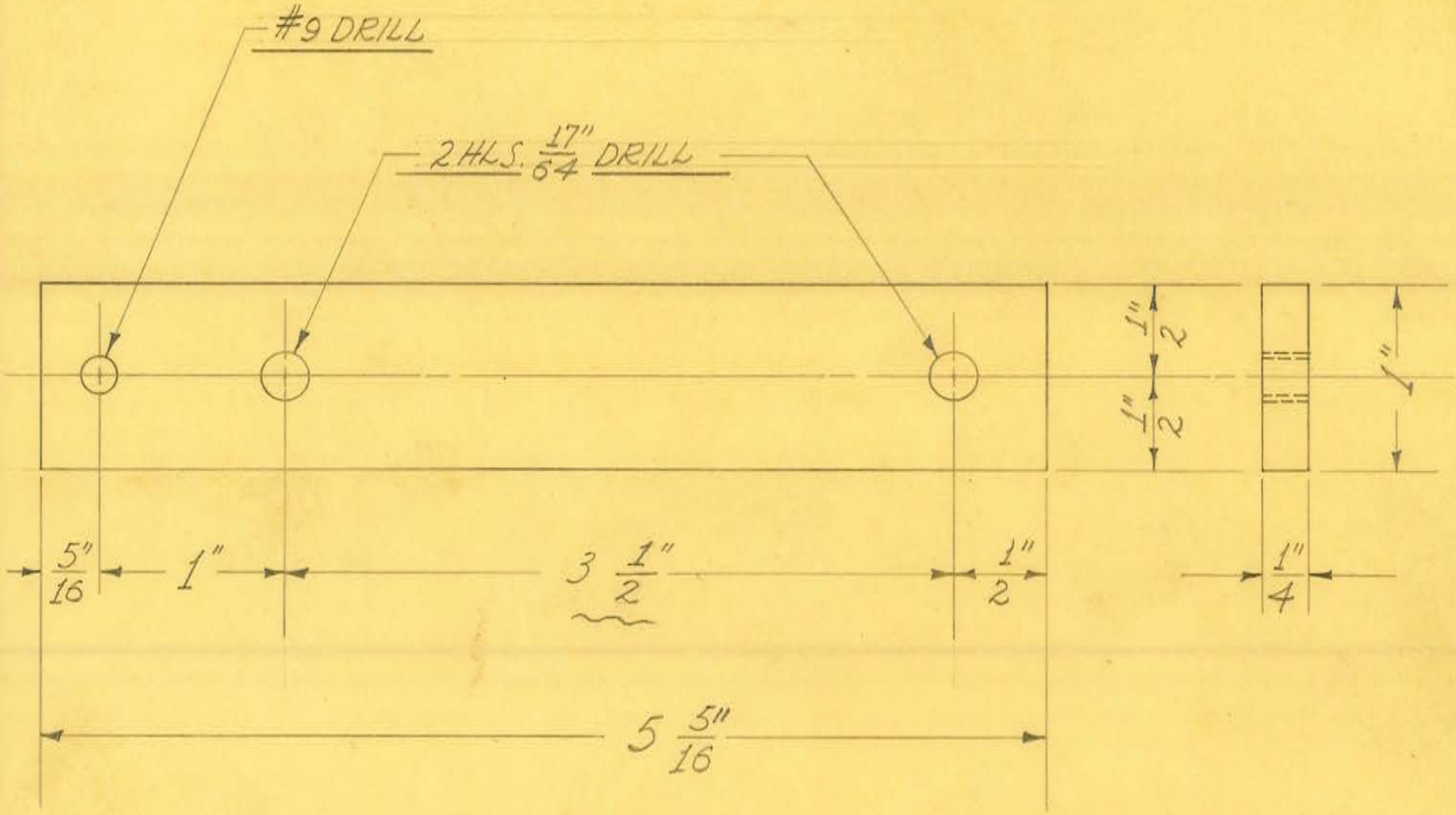


2 REQUIRED

OBSOLETE

| | | | | |
|---|---|---|---|---|
| SIZE | 1" X 1/4" | ISSUE 4-28-38 | J.W. | TITLE: FISCHER MOD. "G" SHOCKPROOF FLUOROSCOPE REMOTE CONTROL - TRANSF. SUPP. - UPPER |
| KIND | C.R. STEEL | CHANGED | | |
| SHAPE | BAR | " | | |
| FINISH | | " | | |
| TEMP. | | " | | |
| PATT. | | " | | |

H. G. FISCHER & CO.
2335 WABANSIA AVE.
CHICAGO, ILL.

CAT. NO.

PART NO. 11467

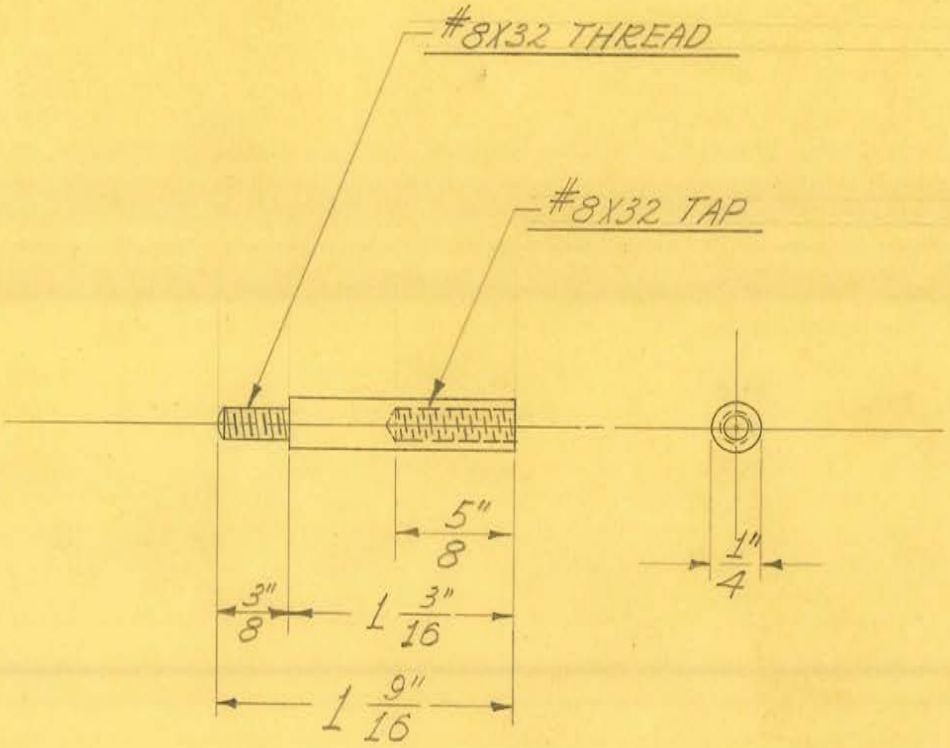


1 REQUIRED

OBSOLETE

| | | | |
|---|---|---|---|
| SIZE | 1/4" DIAM. | ISSUE 4-28-38 | J.W. |
| KIND | BRASS ROD | CHANGED | |
| SHAPE | | " | |
| FINISH | | " | |
| TEMP. | | " | |
| PATT. | | " | |

**TITLE:** FISCHER MOD. "G" SHOCKPROOF FLUOROSCOPE REMOTE CONTROL - PILOT LIGHT MTG. STRIP SPACER - LONG

H. G. FISCHER & CO.
2335 WABANSIA AVE.
CHICAGO, ILL.

CAT. NO.

PART NO. 11468

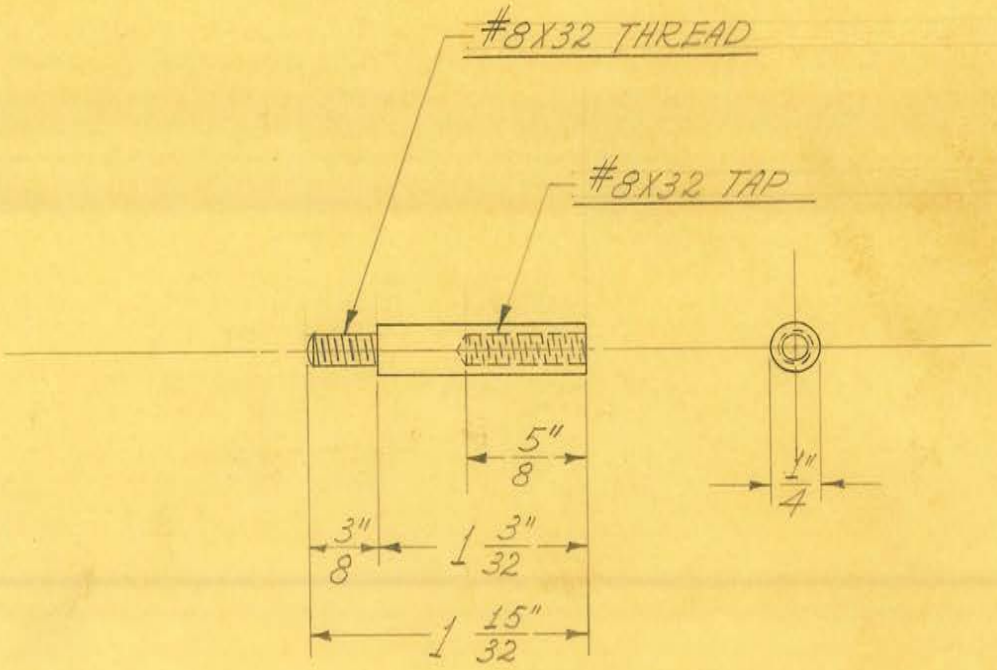


1 REQUIRED

OBSOLETE Obsolete

| | | | | |
|---|---|---|---|---|
| SIZE | 1/4" DIAM. | ISSUE 4-28-38 | J.W. | TITLE: FISCHER MOD. "G" SHOCKPROOF FLUOROSCOPE REMOTE CONTROL - PILOT LIGHT MTG. STRIP SPACER - SHORT |
| KIND | BRASS ROD | CHANGED | | |
| SHAPE | | " | | |
| FINISH | | " | | |
| TEMP. | | " | | |
| PATT. | | " | | |

H. G. FISCHER & CO.
2335 WABANSIA AVE.
CHICAGO, ILL.

CAT. NO.

PART NO. 11469

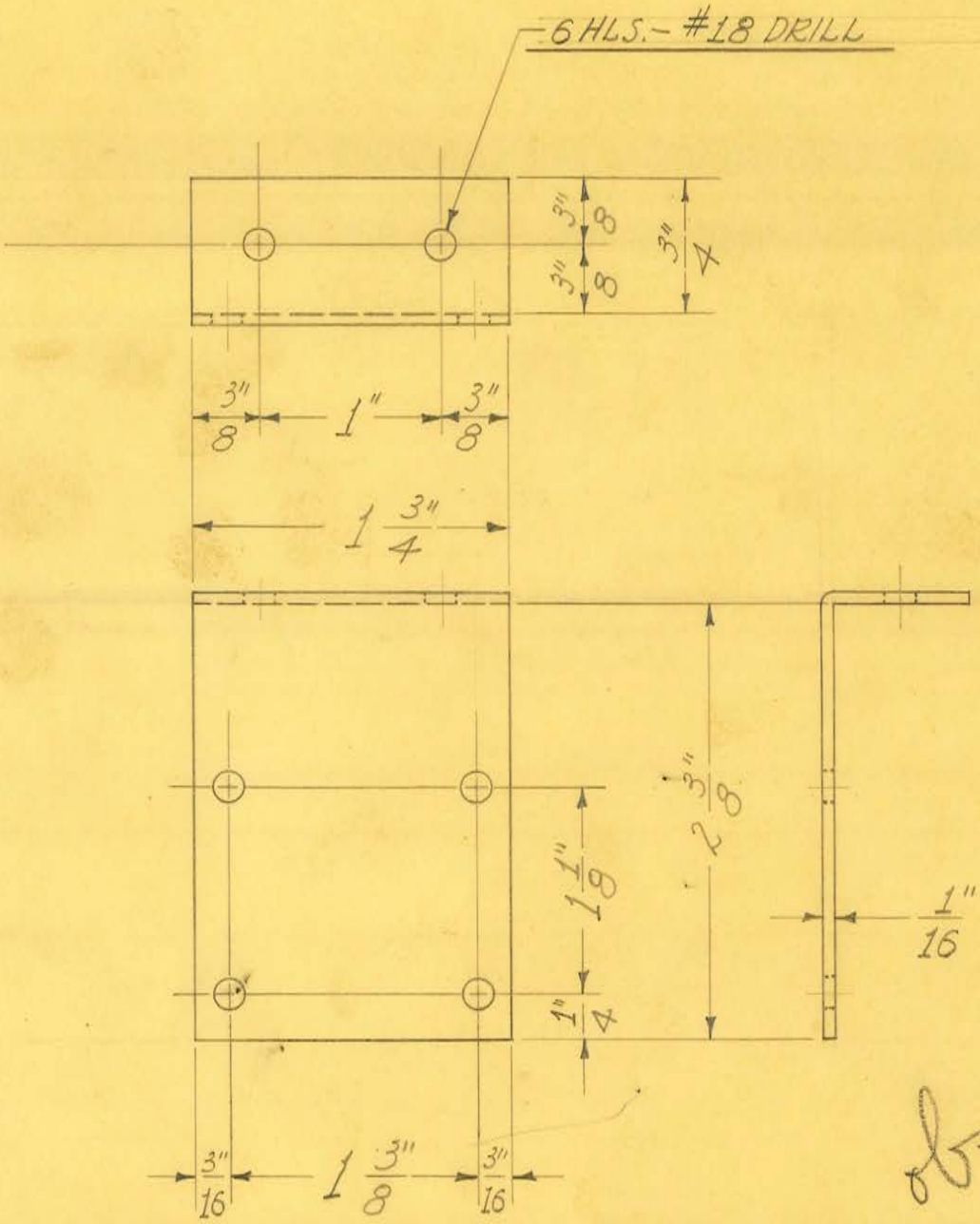


obsolete

OBSOLETE

1 REQUIRED

| | | | |
|---|---|---|---|
| SIZE | 1/16" SHEET | ISSUE 4-29-36 | J.W. |
| KIND | C.R. STEEL | CHANGED | |
| SHAPE | | " | |
| FINISH | | " | |
| TEMP. | | " | |
| PATT. | | " | |

**TITLE:** FISCHER MOD. "G" SHOCKPROOF FLUOROSCOPE REMOTE CONTROL - CONTACTOR BRACKET

H. G. FISCHER & CO.
2335 WABANSIA AVE.
CHICAGO, ILL.

CAT. NO.

PART NO. 11471

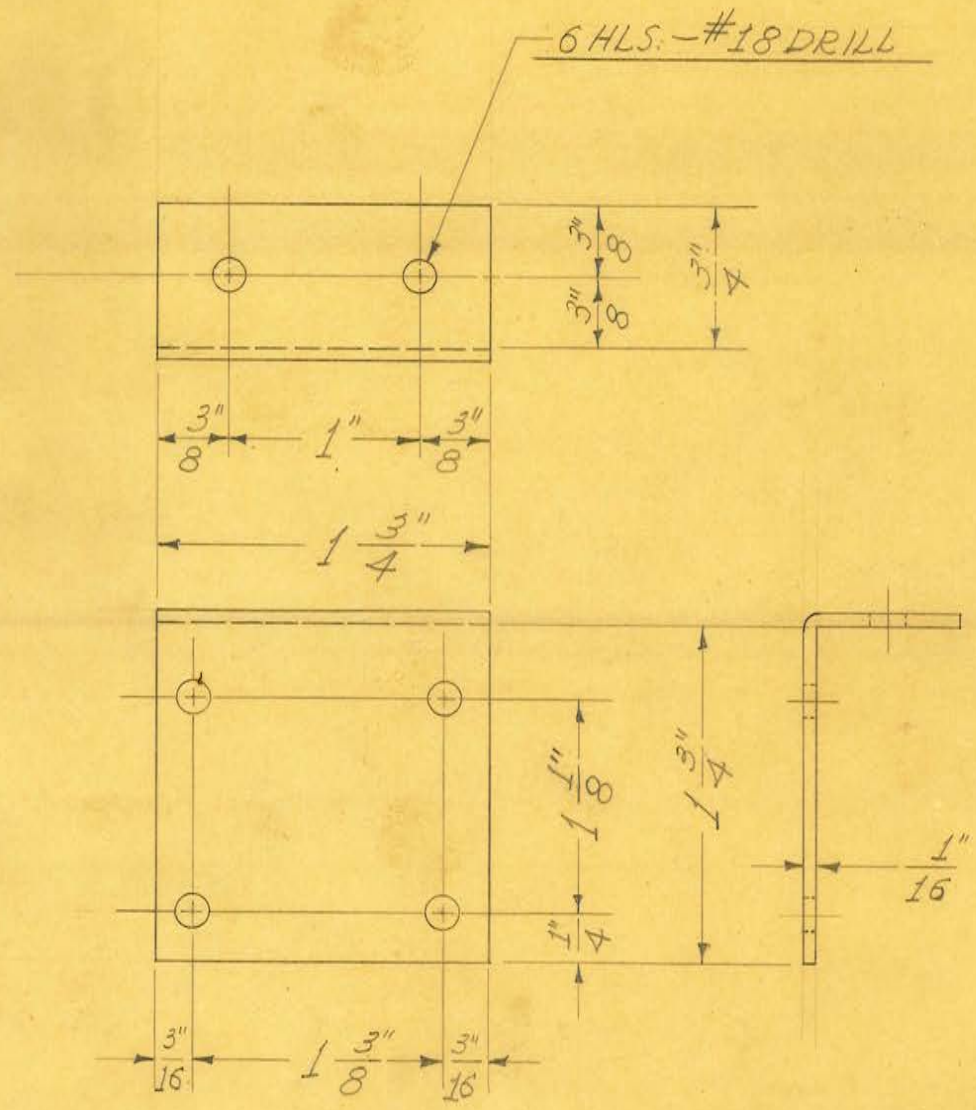


OBSOLETE

DEVELOPED LENGTH = 2 17/32"

1 REQUIRED

| | | | |
|---|---|---|---|
| SIZE | 1/16" SHEET | ISSUE 7-20-38 | J.W. |
| KIND | C.R. STEEL | CHANGED | |
| SHAPE | | " | |
| FINISH | | " | |
| TEMP. | | " | |
| PATT. | | " | |

**TITLE:** FISCHER MOD. "G" SHOCKPROOF FLUOROSCOPE REMOTE CONTROL - CONTACTOR BRACKET

H. G. FISCHER & CO.
2335 WABANSIA AVE.
CHICAGO, ILL.

CAT. NO.

PART NO. 11471A

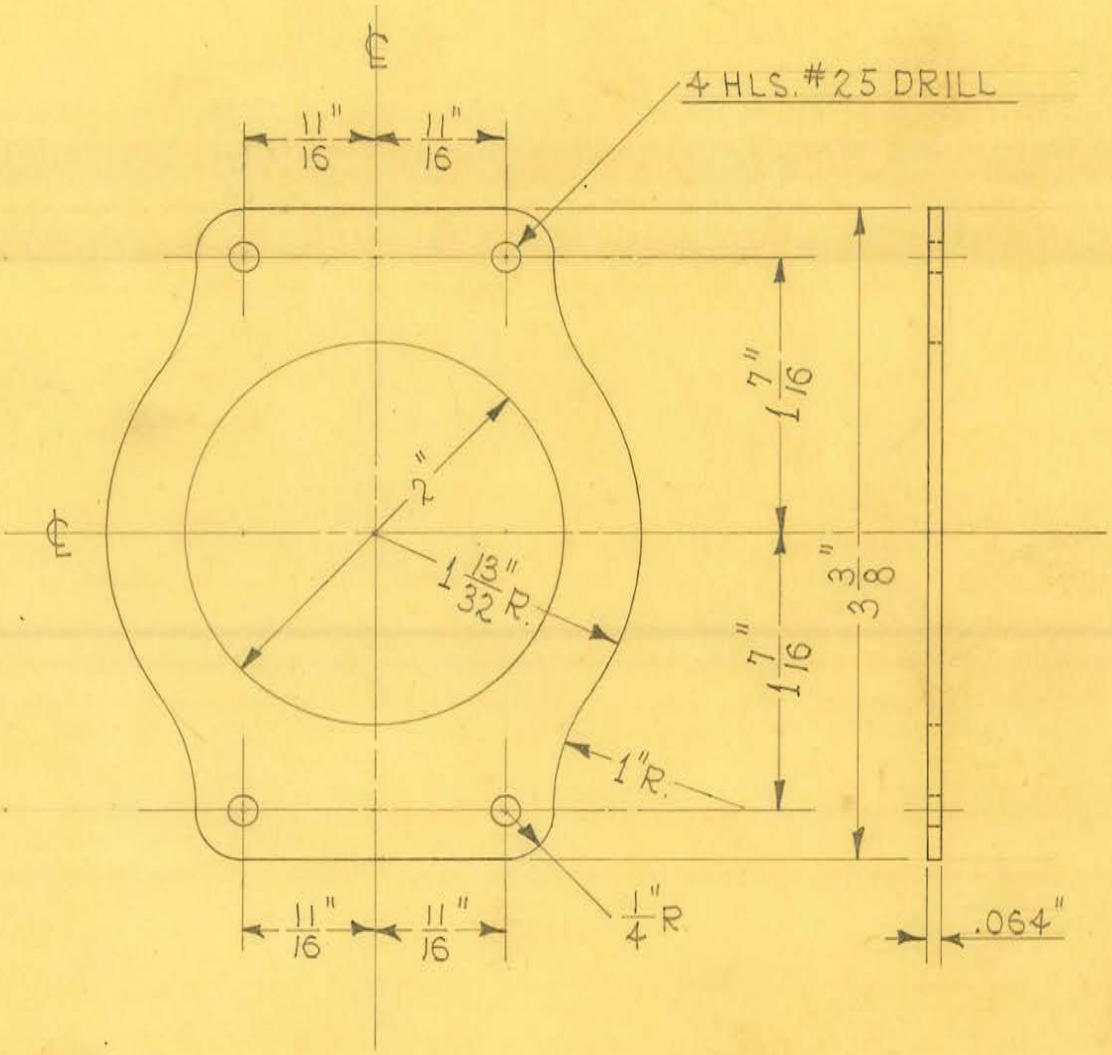


1 REQUIRED

OBSOLETE

obsolete
3-12-53

| | | | |
|---|---|---|---|
| SIZE | #14 B.&S. GA. | ISSUE 5-2-38 | N.E. |
| KIND | H.H. SHEET BRASS | CHANGED | |
| SHAPE | | " | |
| FINISH | | " | |
| TEMP. | | " | |
| PATT. | | " | |

**TITLE:** FISCHER MOD. "G" SHOCKPROOF FLUOROSCOPE-REMOTE CONTROL 10 PT. SW. CONT. RING

H. G. FISCHER & CO.
2335 WABANSIA AVE.
CHICAGO, ILL.

CAT. NO.

PART NO. 11476

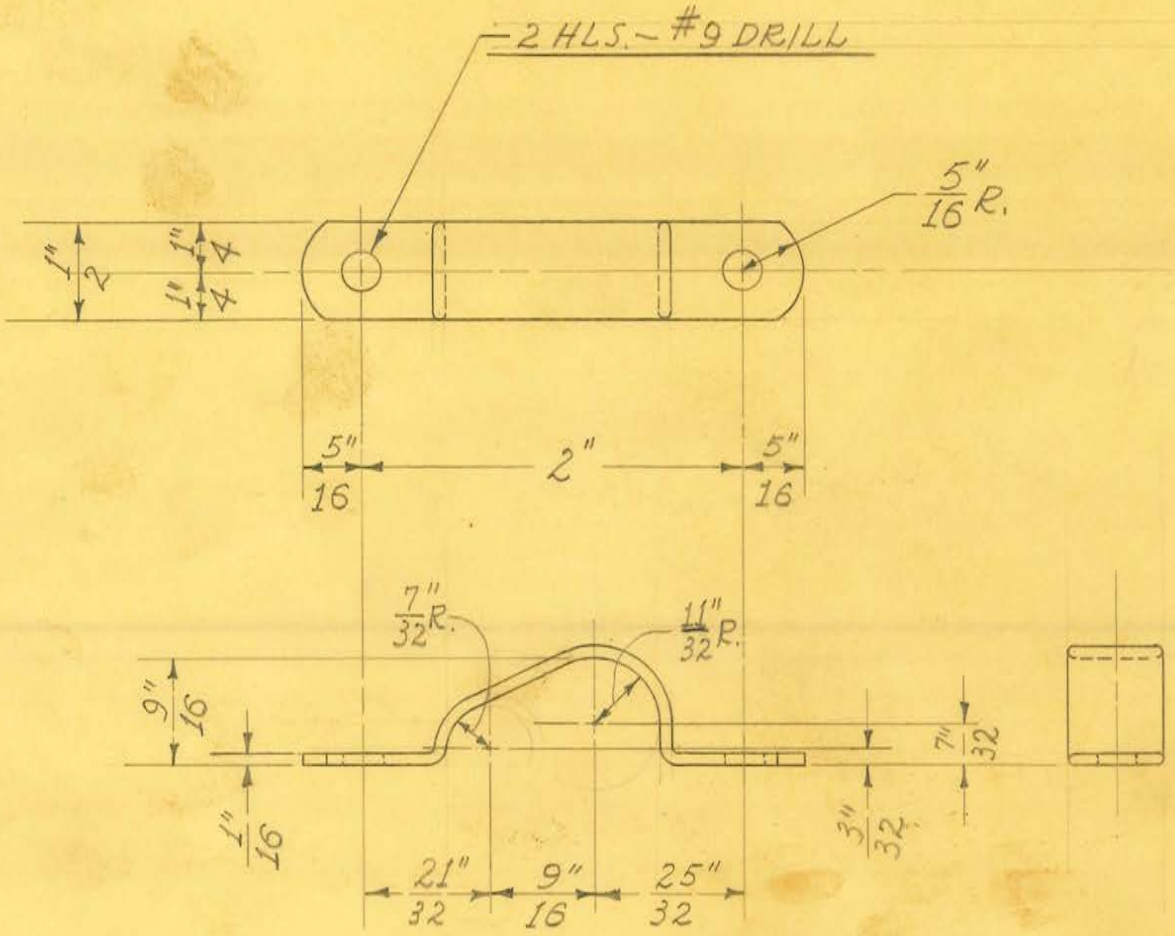


1 REQUIRED

OBSOLETE Obsolete

| | | | |
|---|---|---|---|
| SIZE | 1/2" X 1/16" | ISSUE 4-29-38 | J.W. |
| KIND | FLAT WIRE | CHANGED | |
| SHAPE | | " | |
| FINISH | | " | |
| TEMP. | | " | |
| PATT. | | " | |

**TITLE:** FISCHER MOD. "G" SHOCKPROOF FLUOROSCOPE REMOTE CONTROL – FILAMENT & POWER CORD STRAIN RELIEF

H. G. FISCHER & CO.
2335 WABANSIA AVE.
CHICAGO, ILL.

CAT. NO.

PART NO. 11477

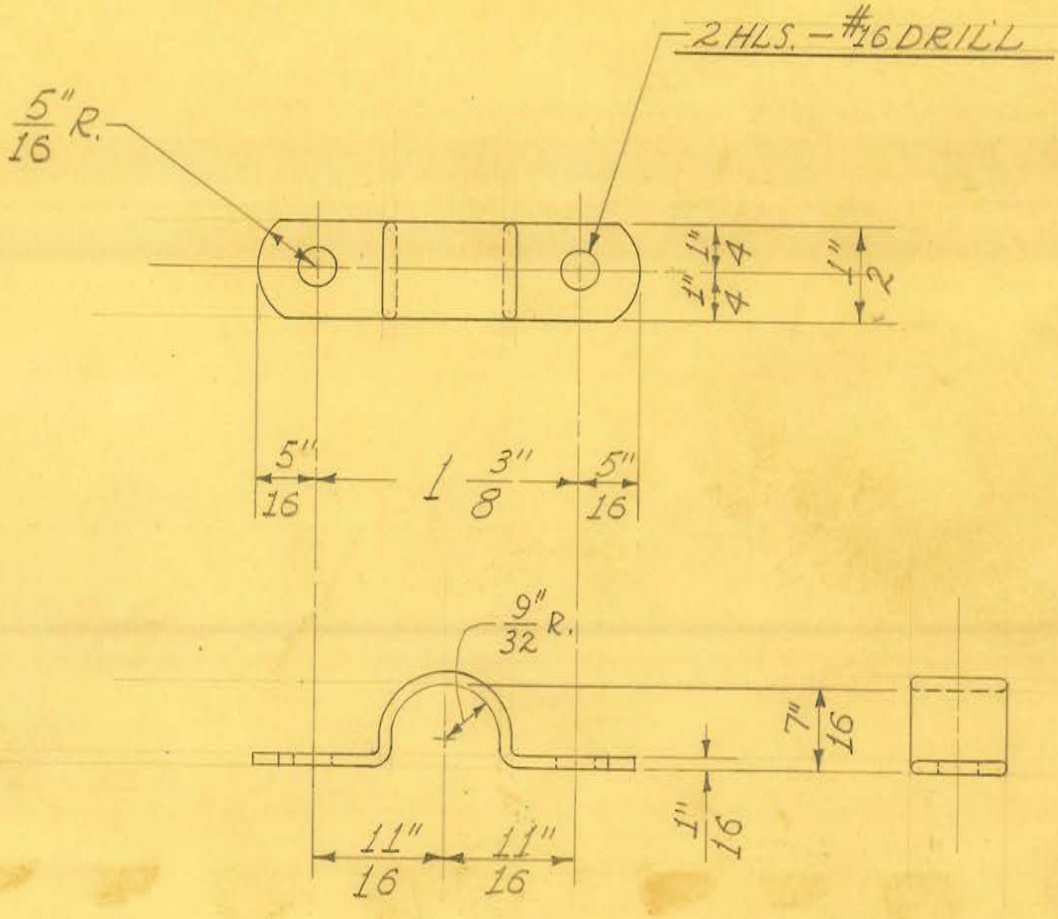


1 REQUIRED

DEVELOPED LENGTH

OBSOLETE

| | | | |
|---|---|---|---|
| SIZE | 1/2" X 1/16" | ISSUE 4-28-38 | J.W. |
| KIND | FLAT WIRE | per C.M. CHANGED 8-25-38 | J.W. |
| SHAPE | | " | |
| FINISH | DU-LITE #8 | " | |
| TEMP. | | " | |
| PATT. | | " | |

**TITLE:** FISCHER MOD. "G" SHOCKPROOF FLUOROSCOPE REMOTE CONTROL – LINE CORD STRAIN RELIEF

H. G. FISCHER & CO.
2335 WABANSIA AVE.
CHICAGO, ILL.

CAT. NO.

PART NO. 11478

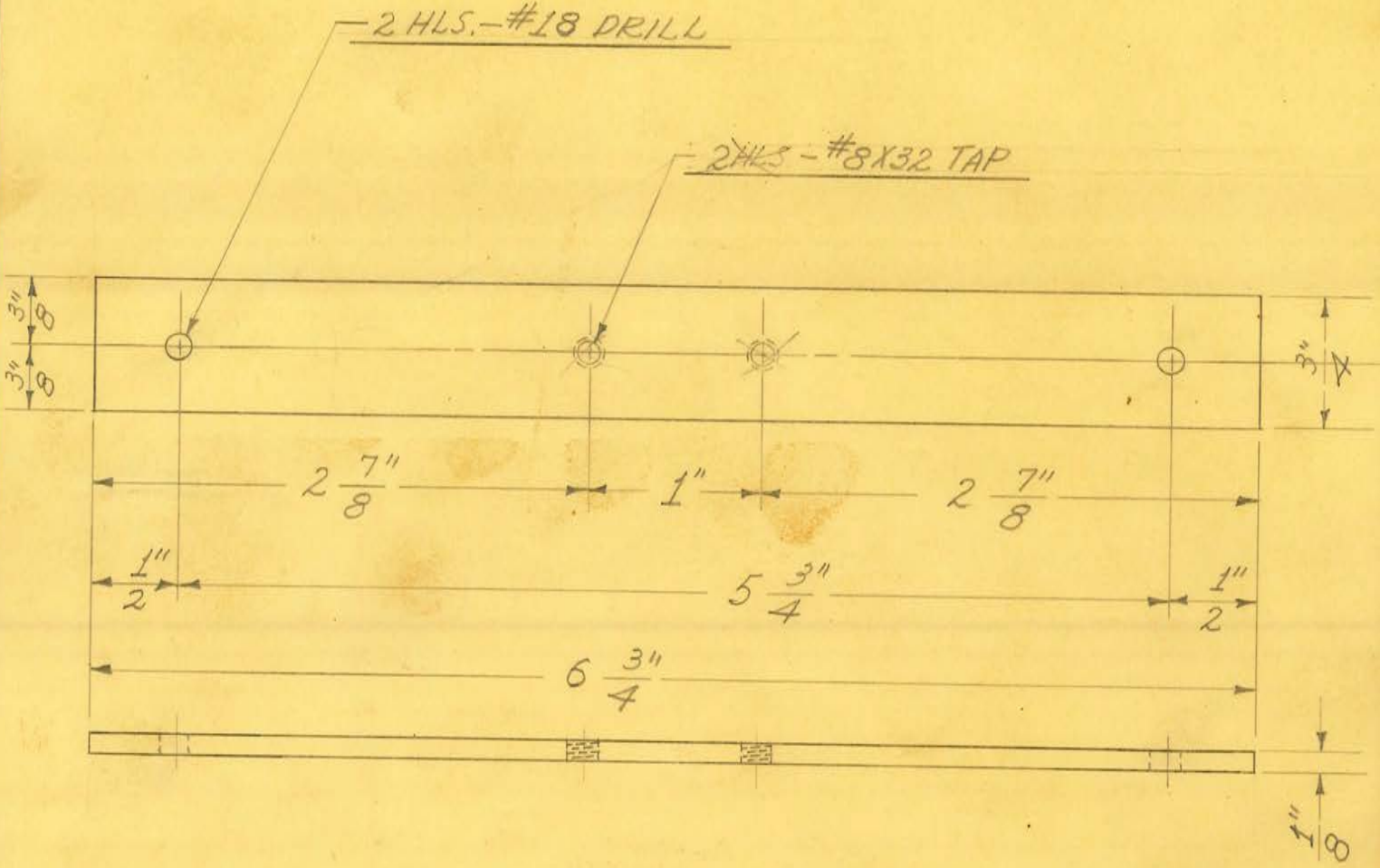


1 REQUIRED

OBSOLETE Obsolete 11

| | | | |
|---|---|---|---|
| SIZE | 3/4" X 3/8" | ISSUE 4-29-38 | J.W. |
| KIND | C.R. STEEL | CHANGED | |
| SHAPE | BAR | " | |
| FINISH | | " | |
| TEMP. | | " | |
| PATT. | | " | |

**TITLE:**
FISCHER MOD. "G" SHOCKPROOF FLUOROSCOPE
REMOTE CONTROL - CONTACTOR BRKT. MTG. STRIP

H. G. FISCHER & CO.
2335 WABANSIA AVE.
CHICAGO, ILL.

CAT. NO.

PART NO. 11479

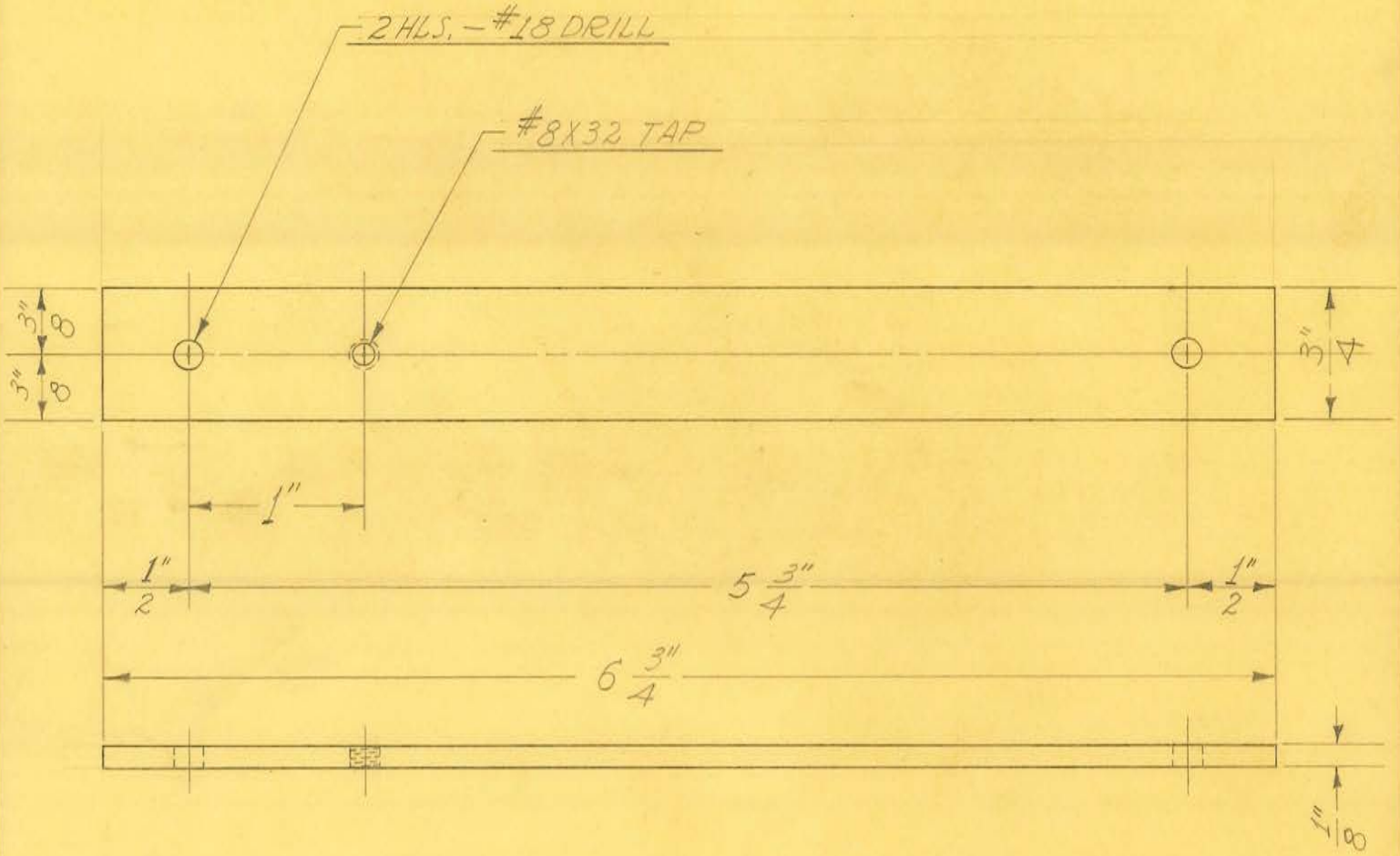


1 REQUIRED

OBSOLETE

| | | | |
|---|---|---|---|
| SIZE | 3/4" X 1/8" | ISSUE 6-23-38 | J.W. |
| KIND | C.R. STEEL | CHANGED | |
| SHAPE | BAR | " | |
| FINISH | | " | |
| TEMP. | | " | |
| PATT. | | " | |

**TITLE:**
FISCHER MOD. "G" SHOCKPROOF FLUOROSCOPE REMOTE CONTROL-CONTACTOR BRKT. MTG. STRIP

H. G. FISCHER & CO.
2335 WABANSIA AVE.
CHICAGO, ILL.

CAT. NO.

PART NO. 11479A

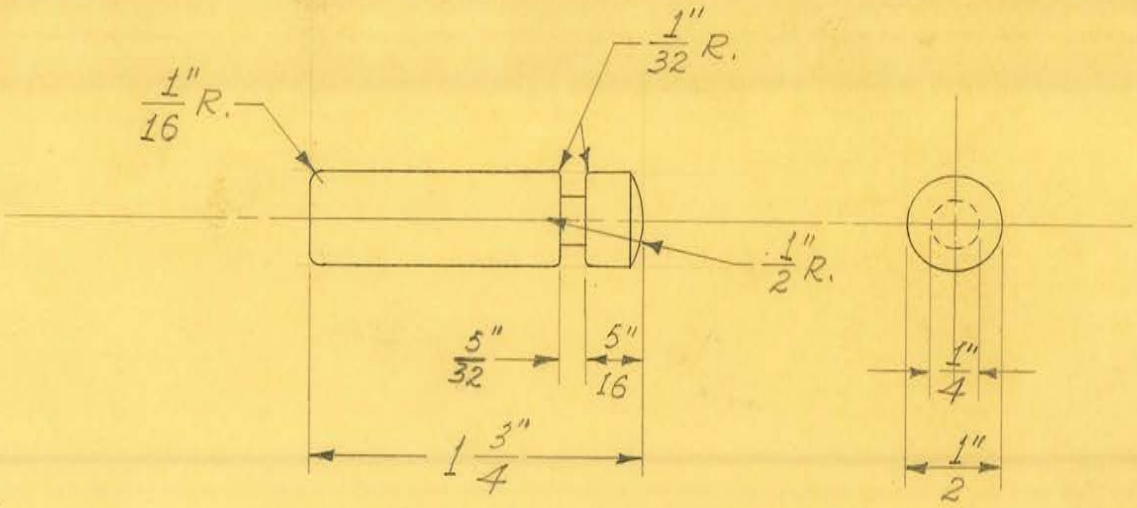


1 REQUIRED

OBSOLETE

| | | | |
|---|---|---|---|
| SIZE | 1/2" DIAM. | ISSUE 6-15-38 | J.W. |
| KIND | C.R. STEEL | CHANGED | |
| SHAPE | ROD | " | |
| FINISH | CAD. #23 | " | |
| TEMP. | | " | |
| PATT. | | " | |

**TITLE:** FISCHER MOD. "G" SHOCKPROOF FLUOROSCOPE REMOTE CONTROL - TIMER SUPPORT STUD

H. G. FISCHER & CO.
2335 WABANSIA AVE.
CHICAGO, ILL.

CAT. NO.

PART NO. 11486

29/64" REAMER - C'SUNK TO 5/8" FACE - FROM BOTTOM SIDE

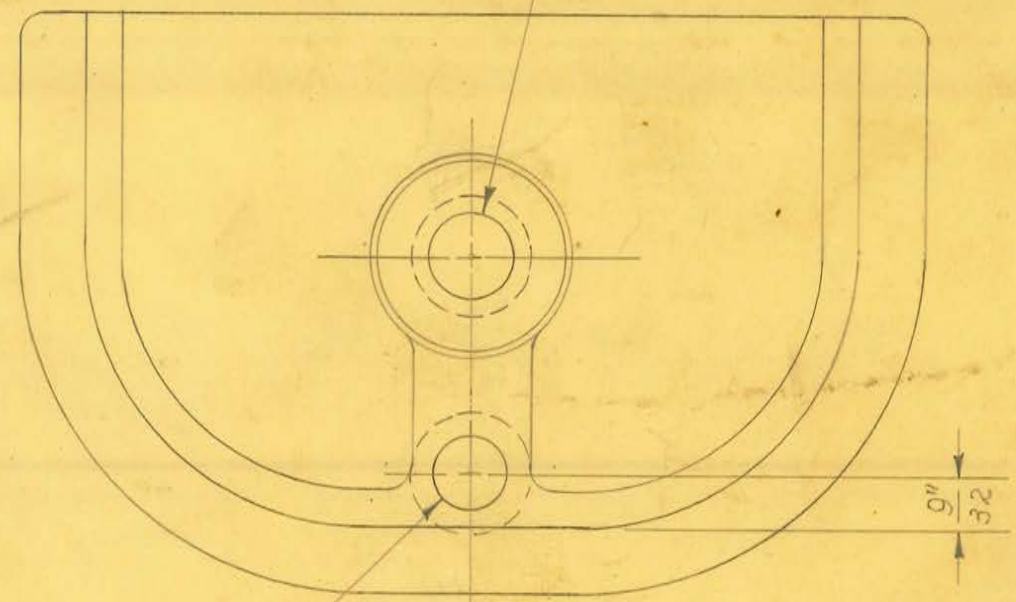


25/64" DRILL - 41/64" C'BORE 1/4" DEEP FROM BOTTOM SIDE

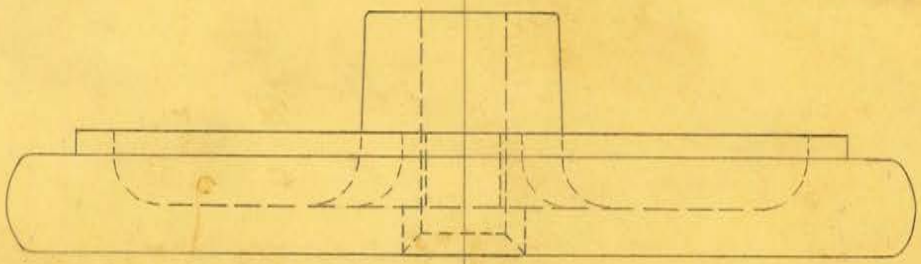

OBSOLETE

2 REQUIRED

Obsolete

| | | | |
|---|---|---|---|
| SIZE | | ISSUE 5-27-38 | J.W. |
| KIND | IRON CASTING | CHANGED | |
| SHAPE | | " | |
| FINISH | PAINTED | " | |
| TEMP. | | " | |
| PATT. | 1230 | " | |

**TITLE:** FISCHER MOD "G" SHOCKPROOF FLUOROSCOPE BASE CASTER BLOCK - LARGE

H. G. FISCHER & CO.
2335 WABANSIA AVE.
CHICAGO, ILL.

CAT. NO.

PART NO. 11492F

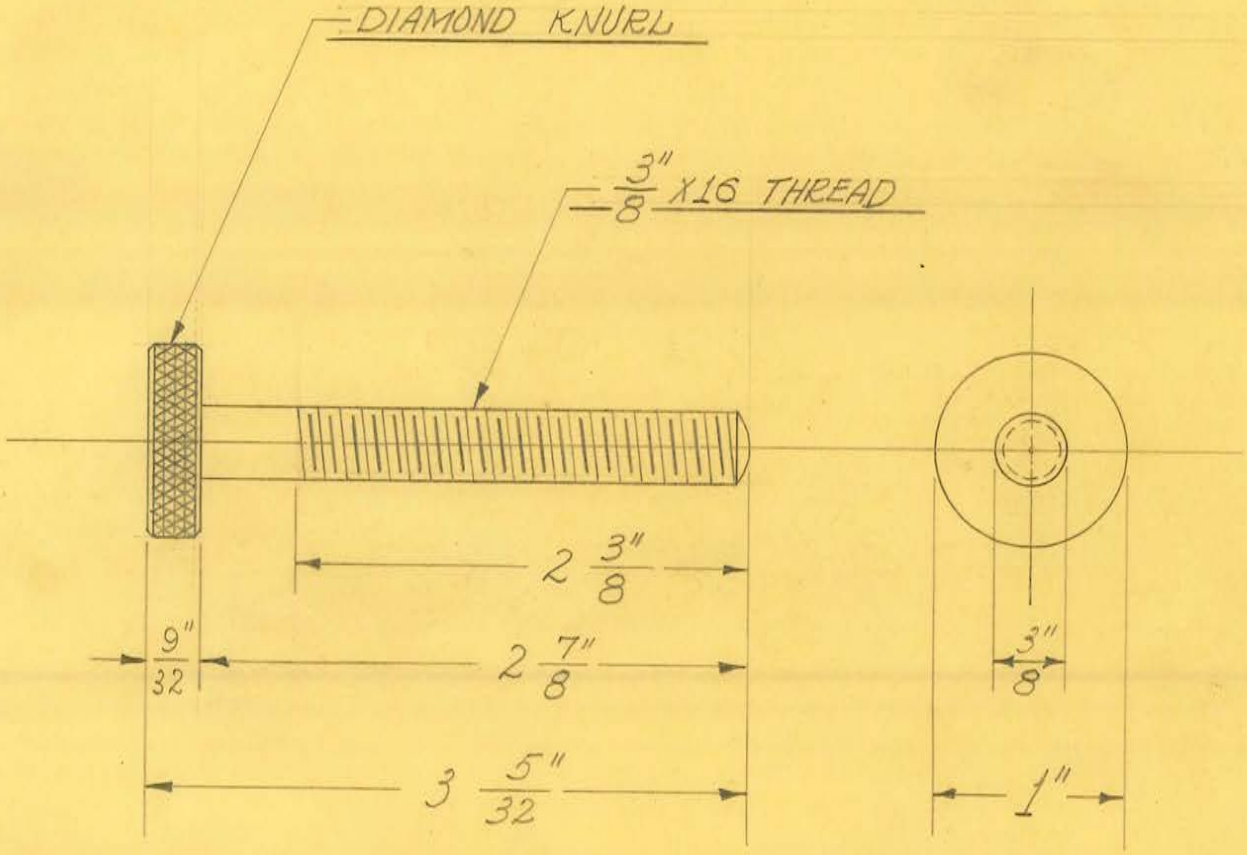


2 REQUIRED

OBSOLETE

Obsolete

| | | | | |
|---|---|---|---|---|
| SIZE | 1" DIAM. | ISSUE 5-6-38 | J.W. | TITLE: FISCHER MOD. "G" SHOCKPROOF FLUOROSCOPE BASE CASTER BLOCK - CLAMP SCREW |
| KIND | C.R. STEEL | CHANGED | | |
| SHAPE | ROD | " | | |
| FINISH | CAD. #23 | " | | |
| TEMP. | | " | | |
| PATT. | | " | | |

H. G. FISCHER & CO.
2335 WABANSIA AVE.
CHICAGO, ILL.

CAT. NO.

PART NO. 11493

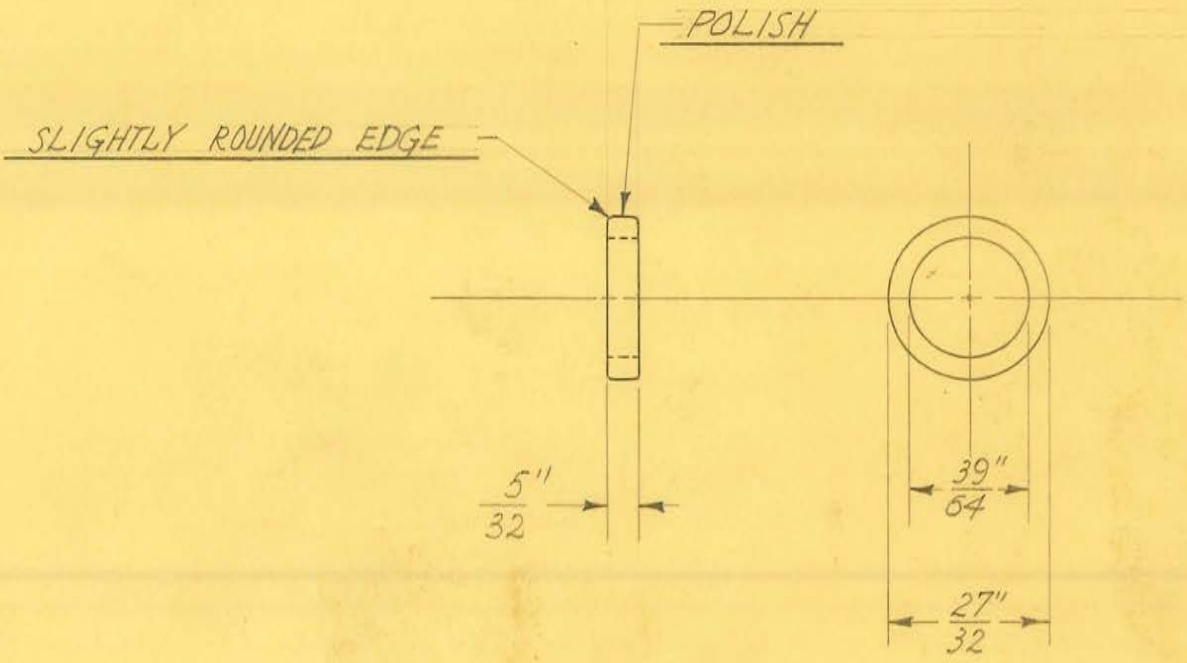


1 REQUIRED

OBSOLETE

Obsolete

| | | | |
|---|---|---|---|
| SIZE | 7/8" DIAM. | ISSUE 5-4-38 | J.W. |
| KIND | ALUM. ROD | CHANGED | |
| SHAPE | | " | |
| FINISH | POL. & BUFF | " | |
| TEMP. | | " | |
| PATT. | | " | |

**TITLE:**
FISCHER MOD. "G" SHOCKPROOF FLUOROSCOPE
PILOT LIGHT SPACER

H. G. FISCHER & CO.
2335 WABANSIA AVE.
CHICAGO, ILL.

CAT. NO.

PART NO. 11494

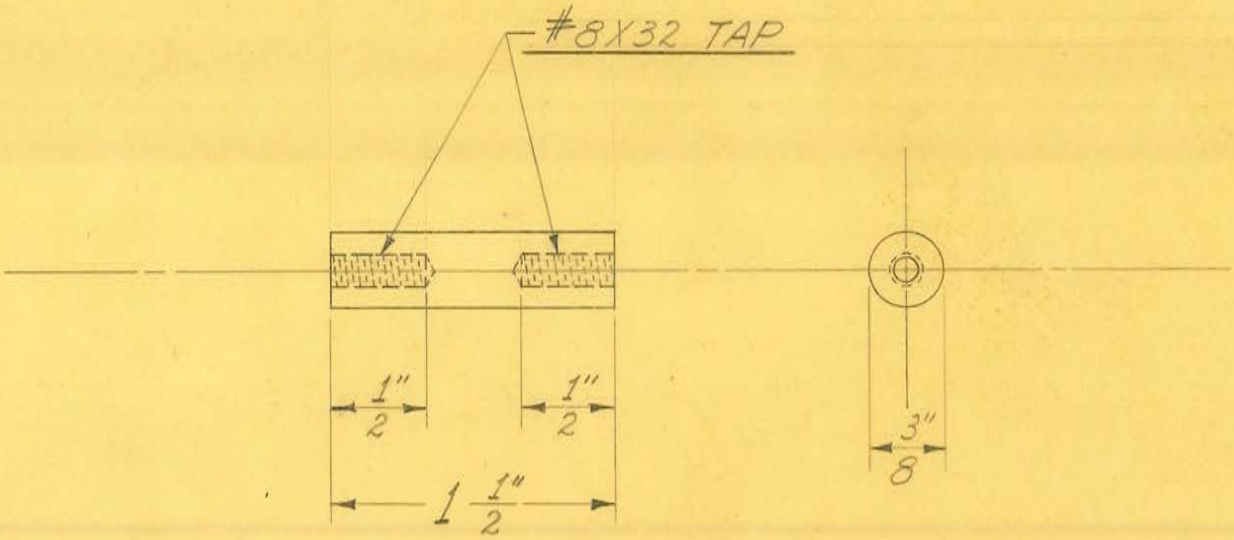


2 REQUIRED

OBSOLETE

| | | | |
|---|---|---|---|
| SIZE | 3/8" DIAM. | ISSUE 6-22-38 | J.W. |
| KIND | BRASS ROD | CHANGED | |
| SHAPE | | " | |
| FINISH | | " | |
| TEMP. | | " | |
| PATT. | | " | |

**TITLE:** FISCHER MOD. "G" SHOCKPROOF FLUOROSCOPE REMOTE CONTROL-PILOT LIGHT MTG. STRIP SPACER

H. G. FISCHER & CO.
2335 WABANSIA AVE.
CHICAGO, ILL.

CAT. NO.

PART NO. 11497

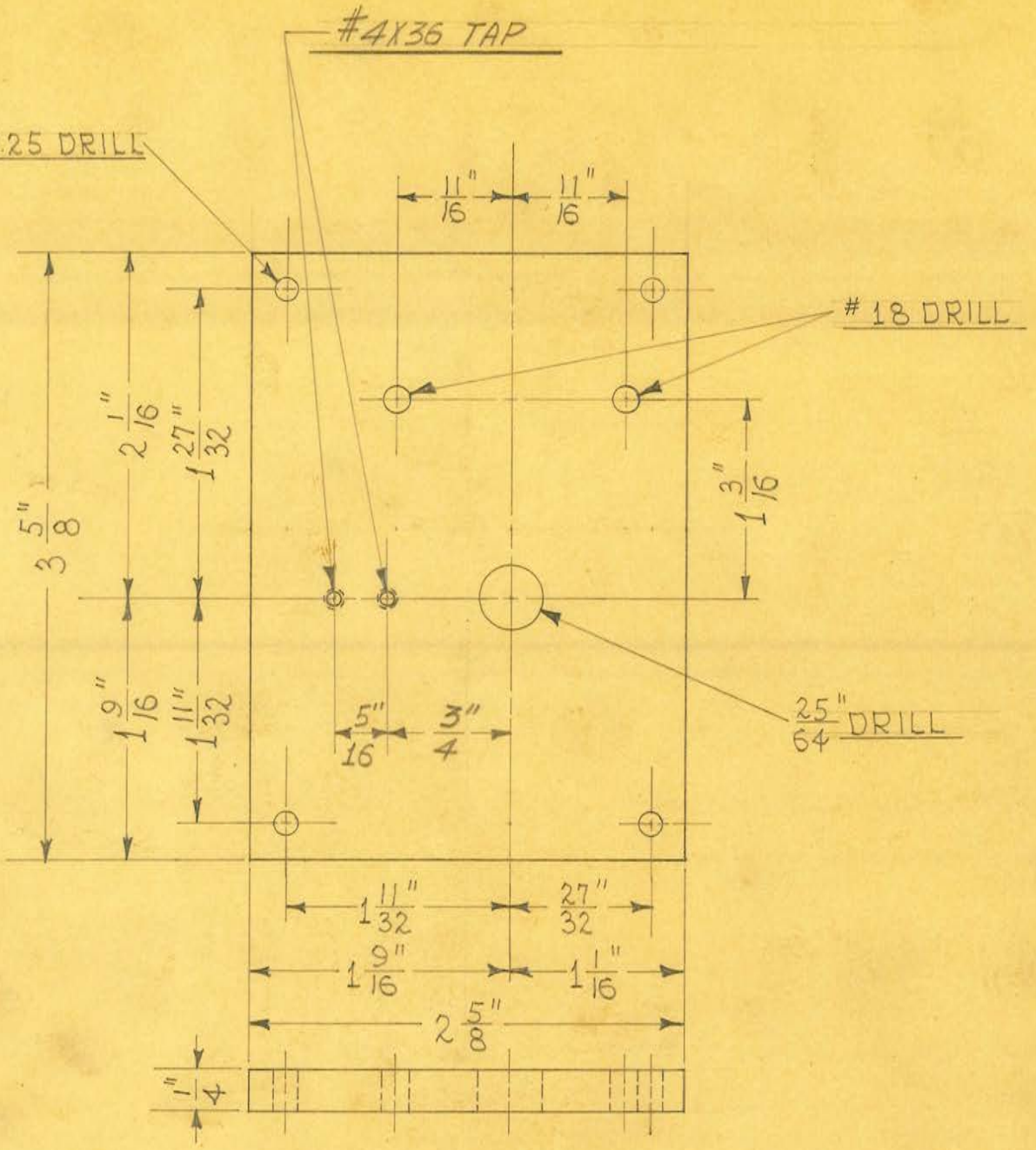


1 REQUIRED

OBSOLETE

| | | | | |
|---|---|---|---|---|
| SIZE | 1/4" (RICHELAIN) | ISSUE 7-15-38 | H.E. | TITLE: FISCHER MOD. "G" SHOCKPROOF FLUOROSCOPE-REMOTE CONTROL - RHEOSTAT BASE |
| KIND | BAKELITE | CHANGED 7-10-40 | J.W. | |
| SHAPE | | " | | |
| FINISH | | " | | |
| TEMP. | | " | | |
| PATT. | | " | | |

H. G. FISCHER & CO.
2335 WABANSIA AVE.
CHICAGO, ILL.

CAT. NO.

PART NO. 11498A

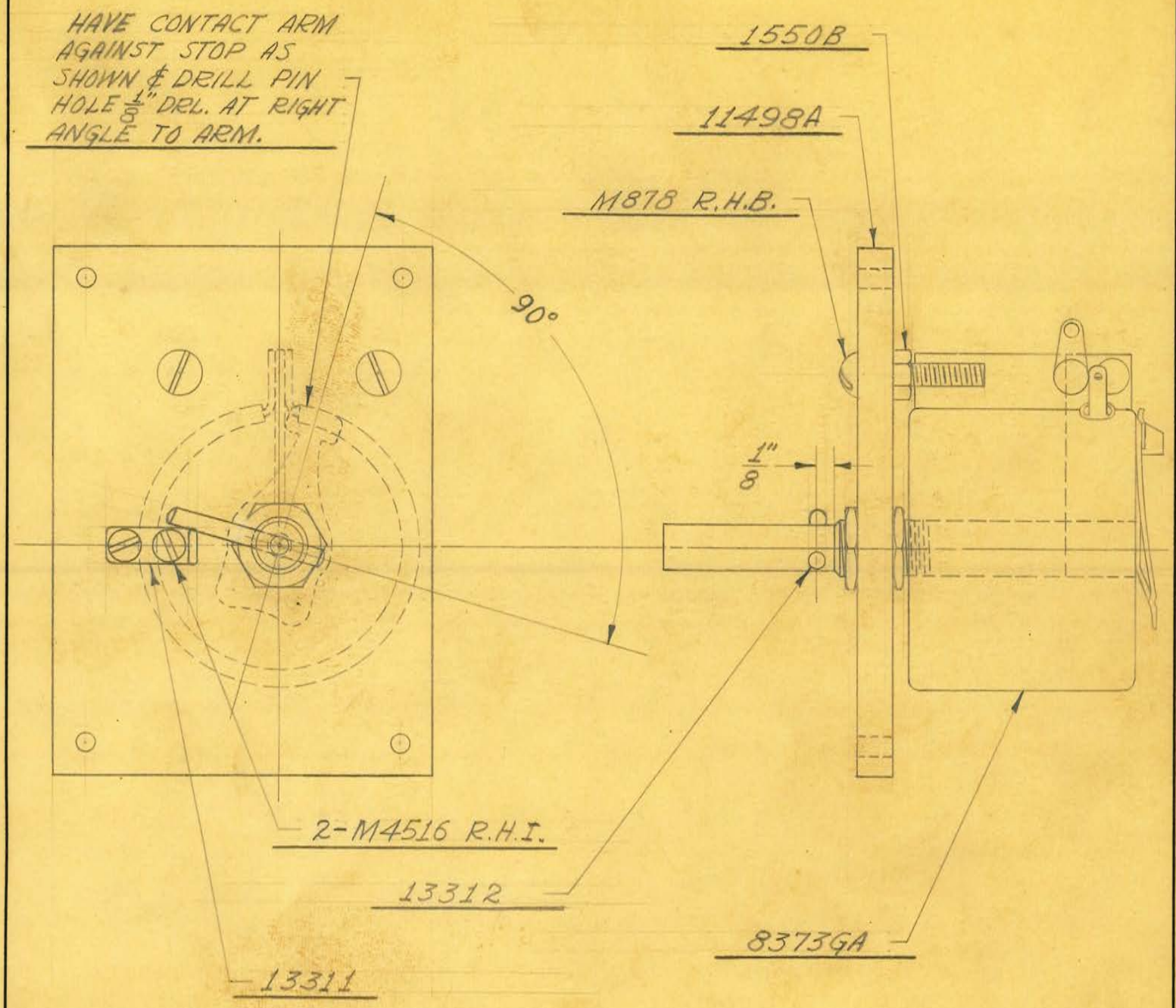


OBSOLETE

1 REQUIRED

| | | | | |
|---|---|---|---|---|
| SIZE | | ISSUE 3-13-39 | J.W. | **TITLE:** FISCHER MOD. "G" SHOCKPROOF FLUOROSCOPE REMOTE CONTROL RHEOSTAT (MOUNTED |
| KIND | | CHANGED 7-10-40 | J.W. | |
| SHAPE | | " | | |
| FINISH | | " | | |
| TEMP. | | " | | |
| PATT. | | " | | |

H. G. FISCHER & CO.
2335 WABANSIA AVE.
CHICAGO, ILL.

CAT. NO.

PART NO. 11499GA

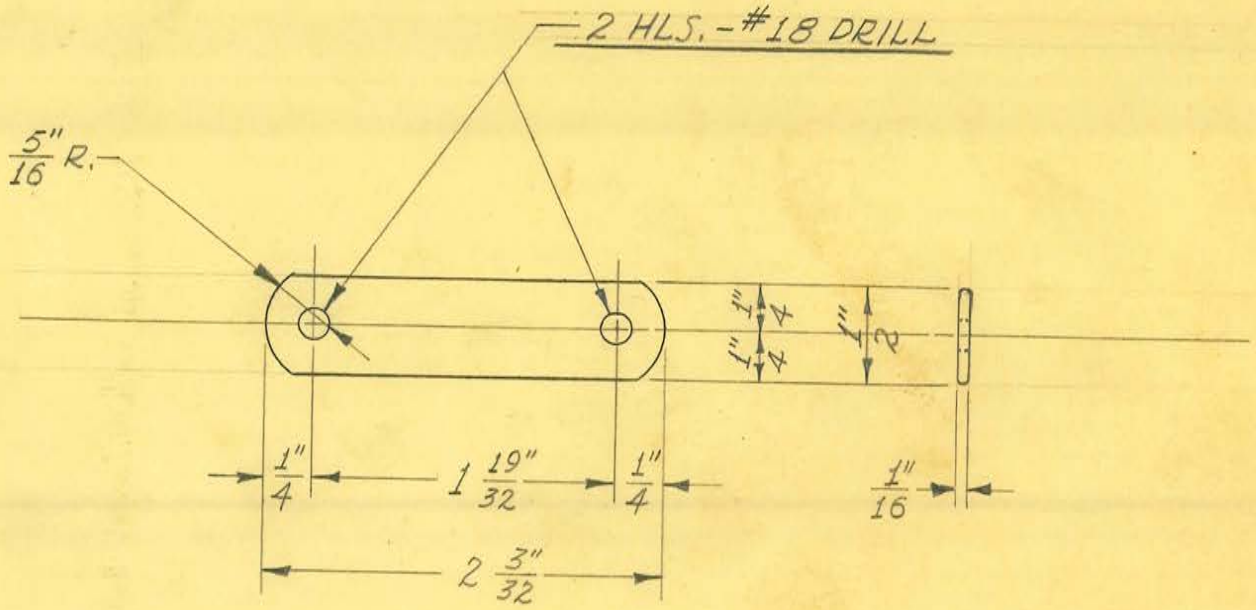


1 REQUIRED

OBSOLETE

| | | | | |
|---|---|---|---|---|
| SIZE | 1/2" X 1/16" | ISSUE 10-6-39 | J.W. | TITLE: FISCHER MOD. "G" SHOCKPROOF FLUOROSCOPE MILLIAMPERAGE CONTROL (220V.-60CY. FOR CHINA) CABLE CLAMP |
| KIND | FLAT WIRE | CHANGED | | |
| SHAPE | | " | | |
| FINISH | DU-LITE #8 | " | | |
| TEMP. | | " | | |
| PATT. | | " | | |

H. G. FISCHER & CO.
2335 WABANSIA AVE.
CHICAGO, ILL.

CAT. NO.

PART NO. 11508

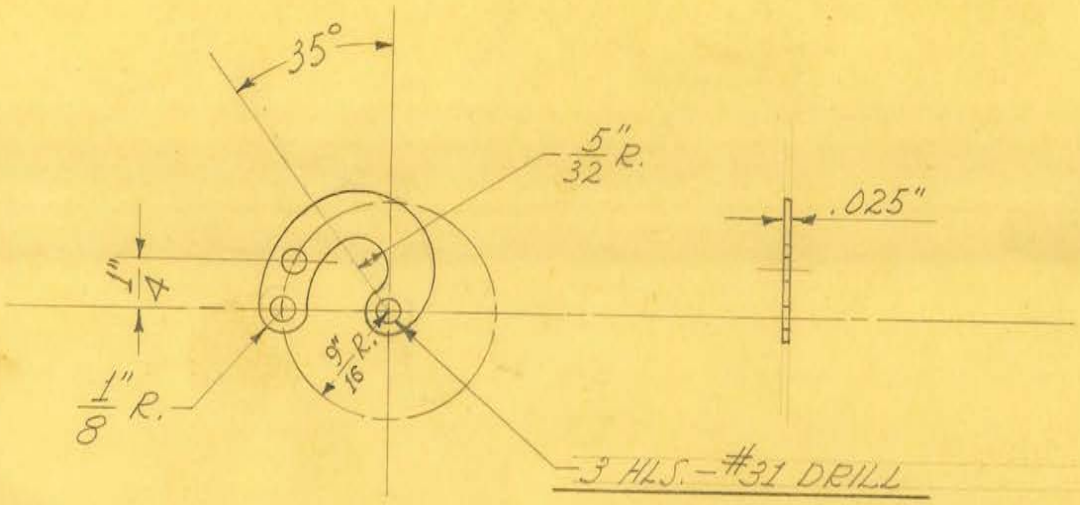


3

2 REQUIRED

OBSOLETE

| | | | | |
|---|---|---|---|---|
| SIZE | .025" SHEET | ISSUE 4-1-38 | J.W. | TITLE: FISCHER MOD. "G" SHOCKPROOF FLUOROSCOPE FOOT SWITCH – CONTACT PLATE – TOP |
| KIND | PHOS. BRONZE | CHANGED | | |
| SHAPE | | " | | |
| FINISH | | " | | |
| TEMP. | | " | | |
| PATT. | | " | | |

H. G. FISCHER & CO.
2335 WABANSIA AVE.
CHICAGO, ILL.

CAT. NO.

PART NO. 11422

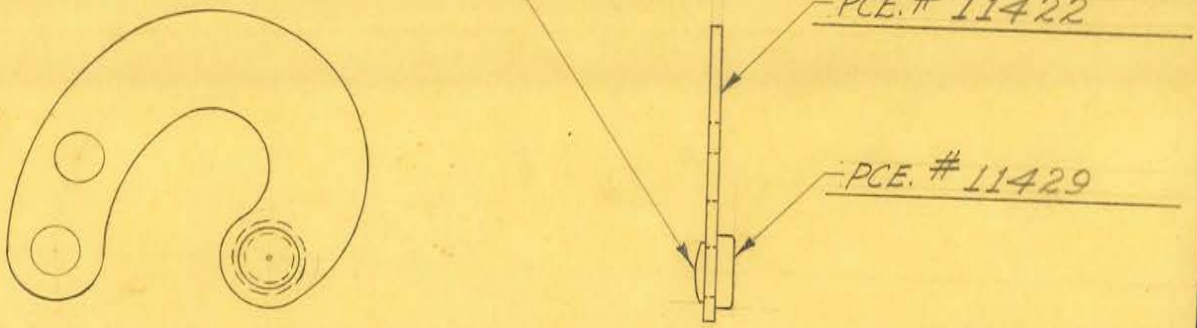


SCALE ÷ DOUBLE SIZE

1 REQUIRED

OBSOLETE

| | | | | |
|---|---|---|---|---|
| SIZE | | ISSUE 4-4-38 | J.W. | TITLE: FISCHER MOD. "G" SHOCKPROOF FLUOROSCOPE FOOT SWITCH - CONTACT PLATE ASSEM. - TOP |
| KIND | | CHANGED | | |
| SHAPE | | " | | |
| FINISH | | " | | |
| TEMP. | | " | | |
| PATT. | | " | | |

H. G. FISCHER & CO.
2335 WABANSIA AVE.
CHICAGO, ILL.

CAT. NO.

PART NO. 11423G

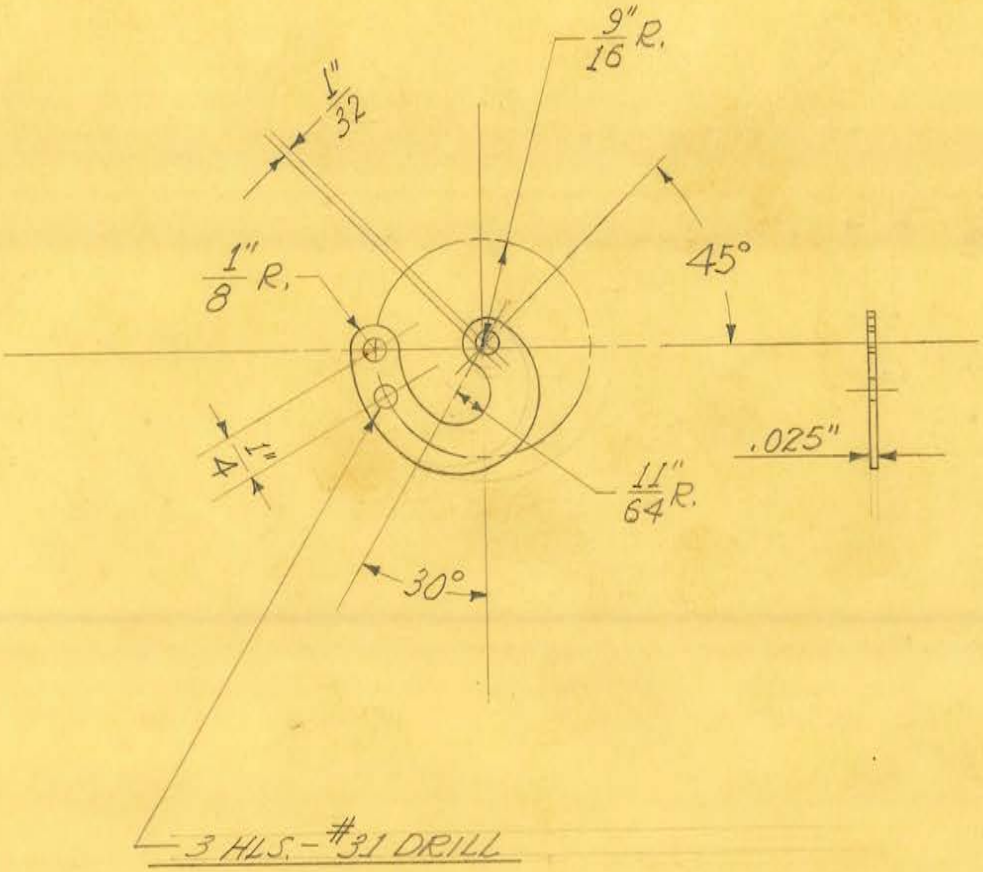


2 REQUIRED

OBSOLETE

obsolete

| | | | | |
|---|---|---|---|---|
| SIZE | .025" SHEET | ISSUE 4-1-38 | J.W. | TITLE: FISCHER MOD. "G" SHOCKPROOF FLUOROSCOPE FOOT SWITCH - CONTACT PLATE - BOTTOM - BLANK |
| KIND | PHOS. BRONZE | CHANGED | | |
| SHAPE | | " | | |
| FINISH | | " | | |
| TEMP. | | " | | |
| PATT. | | " | | |

H. G. FISCHER & CO.
2335 WABANSIA AVE.
CHICAGO, ILL.

CAT. NO.

PART NO. 11424

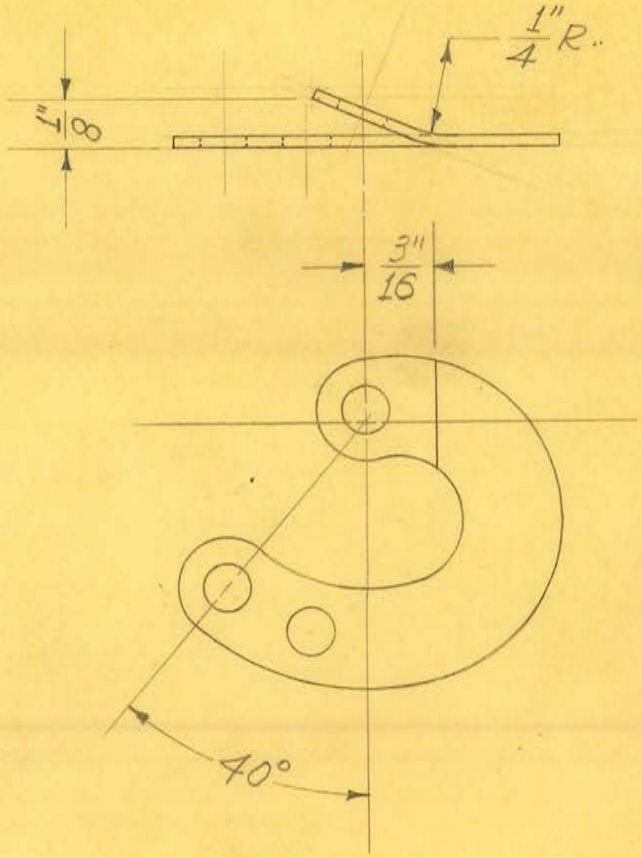


1 REQUIRED

SCALE ÷ DOUBLE SIZE

OBSOLETE

| | | | |
|---|---|---|---|
| SIZE | | ISSUE 4-1-38 | J. W. |
| KIND | FROM #11422 | CHANGED | |
| SHAPE | | " | |
| FINISH | | " | |
| TEMP. | | " | |
| PATT. | | " | |

**TITLE:** FISCHER MOD "G" SHOCKPROOF FLUOROSCOPE FOOT SWITCH CONTACT PLATE - BOTTOM

H. G. FISCHER & CO.
2335 WABANSIA AVE.
CHICAGO, ILL.

CAT. NO.

PART NO. 11425

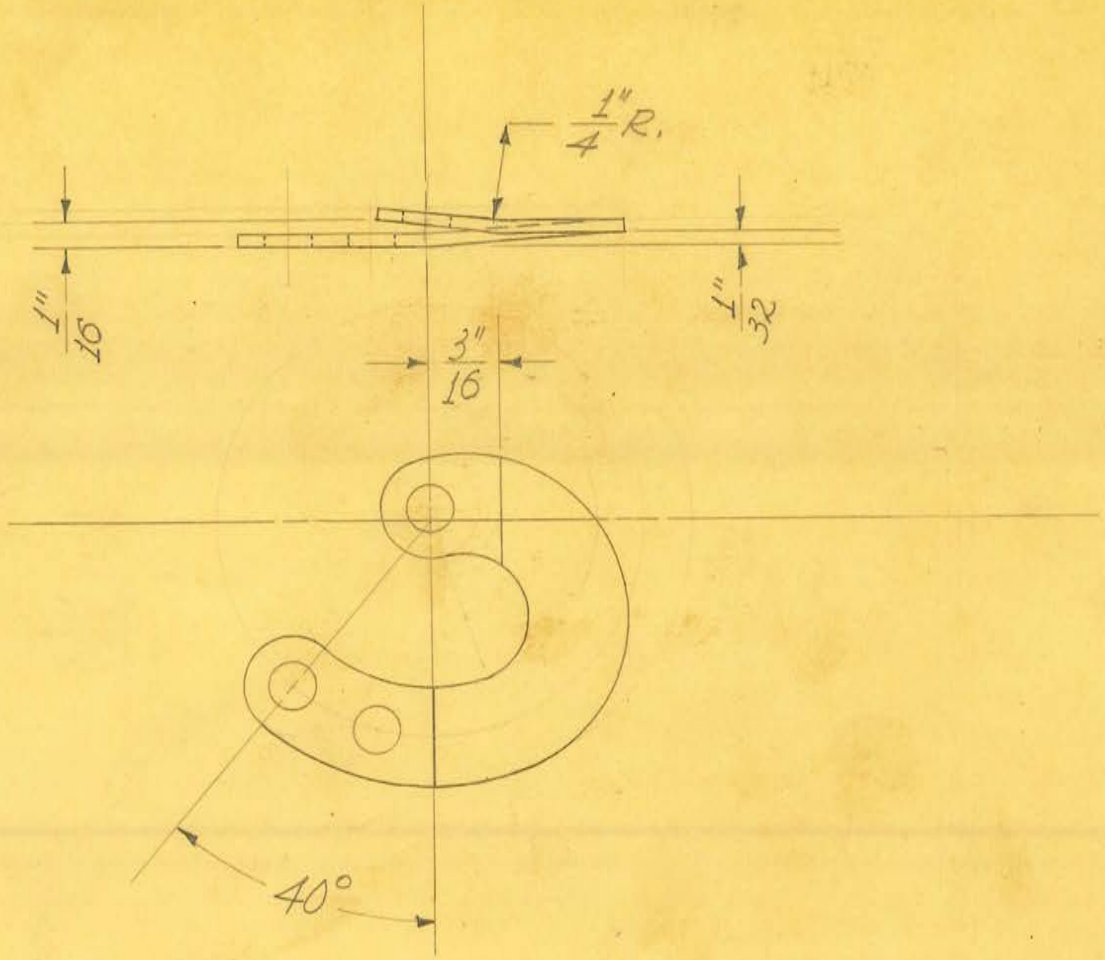


1 REQUIRED

SCALE ÷ DOUBLE SIZE

OBSOLETE

| | | | |
|---|---|---|---|
| SIZE | | ISSUE 4-1-38 | J.W. |
| KIND | FROM # 11422 | CHANGED | |
| SHAPE | | " | |
| FINISH | | " | |
| TEMP. | | " | |
| PATT. | | " | |

**TITLE:** FISCHER MOD. "G" SHOCKPROOF FLUOROSCOPE FOOT SWITCH - CONTACT PLATE - CENTER

H. G. FISCHER & CO.
2335 WABANSIA AVE.
CHICAGO, ILL.

CAT. NO.

PART NO. 11426

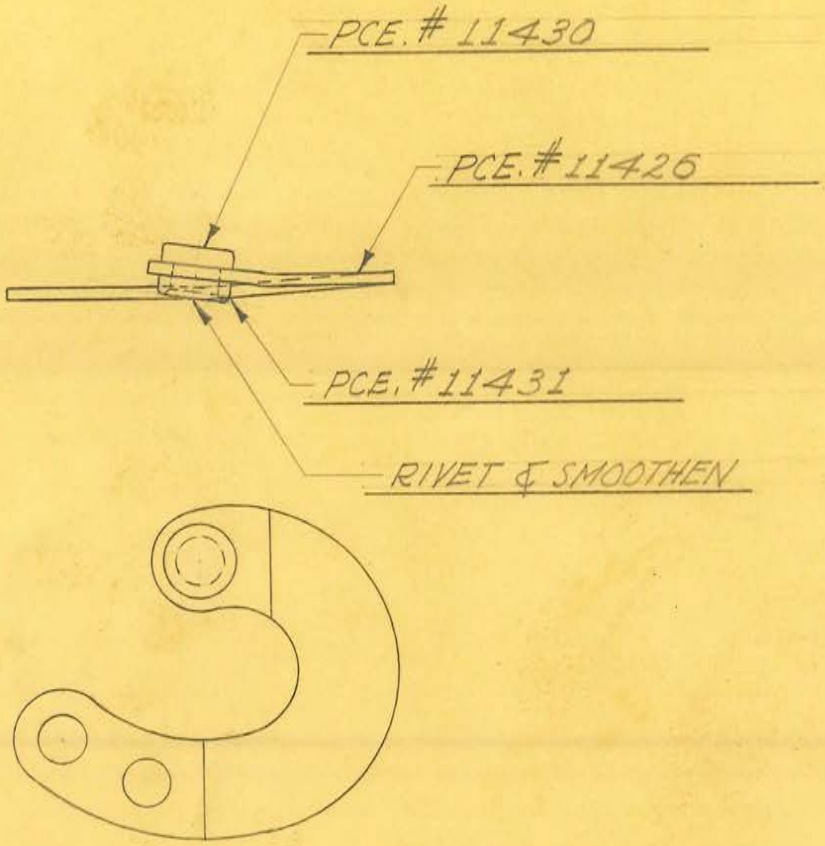


SCALE ÷ DOUBLE SIZE

1 REQUIRED

OBSOLETE

| | | | |
|---|---|---|---|
| SIZE | | ISSUE 4-4-38 | J.W. |
| KIND | | CHANGED | |
| SHAPE | | " | |
| FINISH | | " | |
| TEMP. | | " | |
| PATT. | | " | |

**TITLE:** FISCHER MOD. "G" SHOCKPROOF FLUOROSCOPE FOOT SWITCH - CONTACT PLATE ASSEM. - CENTER

H. G. FISCHER & CO.
2335 WABANSIA AVE.
CHICAGO, ILL.

CAT. NO.

PART NO. 11427G

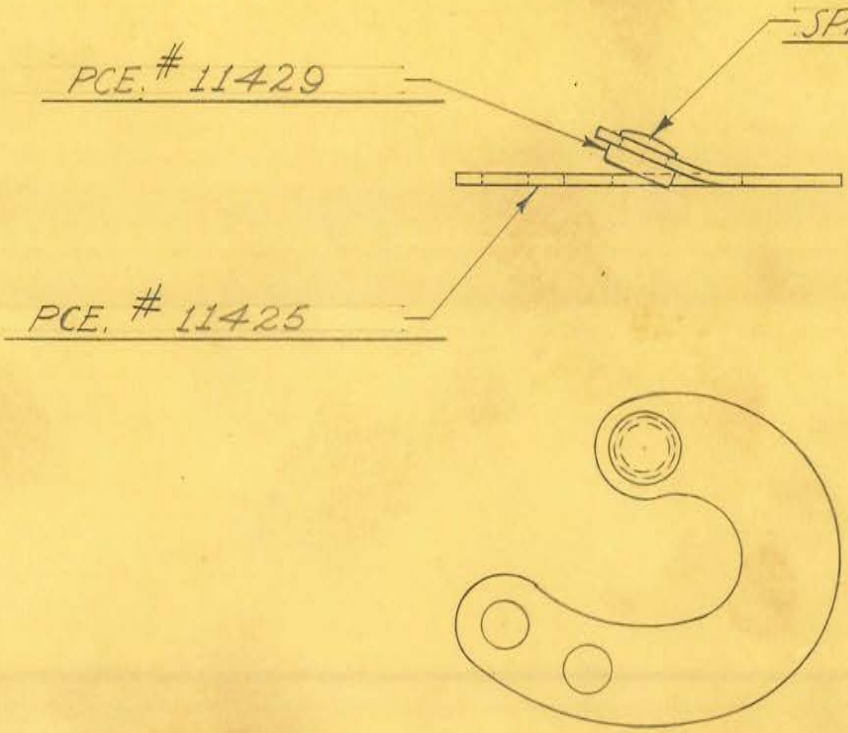


SCALE ÷ DOUBLE SIZE

1 REQUIRED

OBSOLETE

| | | | |
|---|---|---|---|
| SIZE | | ISSUE 4-4-38 | J.W. |
| KIND | | CHANGED | |
| SHAPE | | " | |
| FINISH | | " | |
| TEMP. | | " | |
| PATT. | | " | |

**TITLE:** FISCHER MOD. "G" SHOCKPROOF FLUOROSCOPE FOOT SWITCH-CONTACT PLATE ASSEM.-BOTTOM

H. G. FISCHER & CO.
2335 WABANSIA AVE.
CHICAGO, ILL.

CAT. NO.

PART NO. 11428G

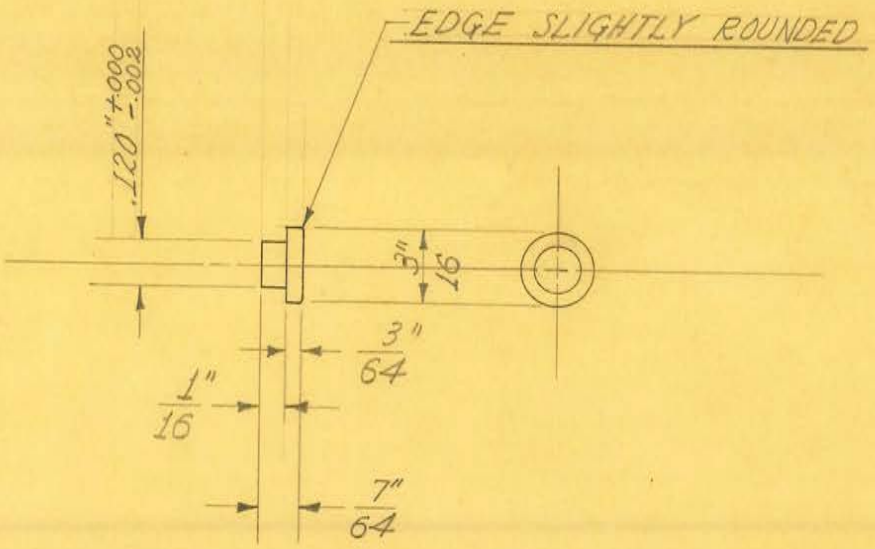


SCALE ÷ 2 DIAMETERS

2 REQUIRED

OBSOLETE

| | | | |
|---|---|---|---|
| SIZE | 3/16" DIAM. | ISSUE 4-4-38 | J.W. |
| KIND | SILVER ROD | CHANGED | |
| SHAPE | | " | |
| FINISH | | " | |
| TEMP. | | " | |
| PATT. | | " | |

**TITLE:** FISCHER MOD. "G" SHOCKPROOF FLUOROSCOPE FOOT SWITCH - CONTACT POINT - TOP & BOTTOM

H. G. FISCHER & CO.
2335 WABANSIA AVE.
CHICAGO, ILL.

CAT. NO.

PART NO. 11429

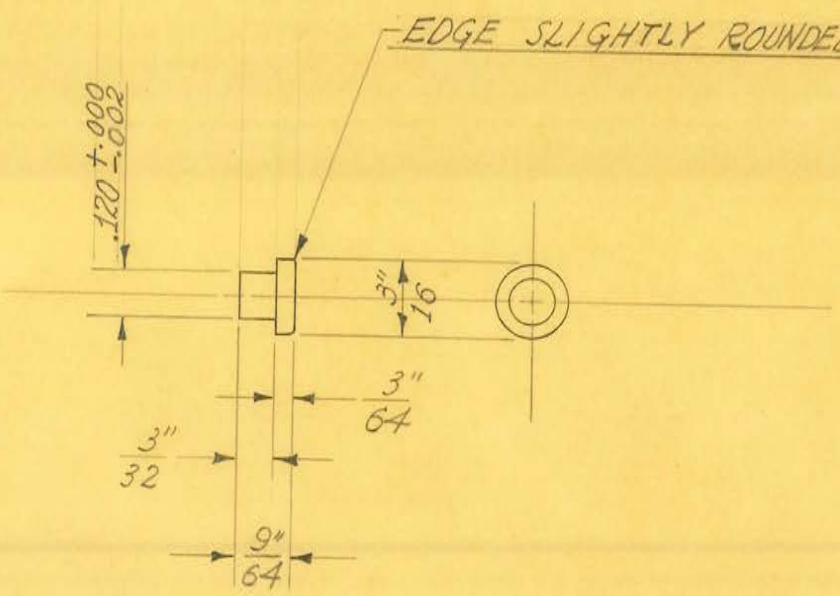


SCALE ÷ 2 DIAMETERS

1 REQUIRED

OBSOLETE

| | | | | |
|---|---|---|---|---|
| SIZE | 3/16" DIAM. | ISSUE 4-4-38 | J.W. | TITLE: FISCHER MOD. "G" SHOCKPROOF FLUOROSCOPE FOOT SWITCH - CONTACT POINT - CENTER |
| KIND | SILVER ROD | CHANGED | | |
| SHAPE | | " | | |
| FINISH | | " | | |
| TEMP. | | " | | |
| PATT. | | " | | |

H. G. FISCHER & CO.
2335 WABANSIA AVE.
CHICAGO, ILL.

CAT. NO.

PART NO. 11430

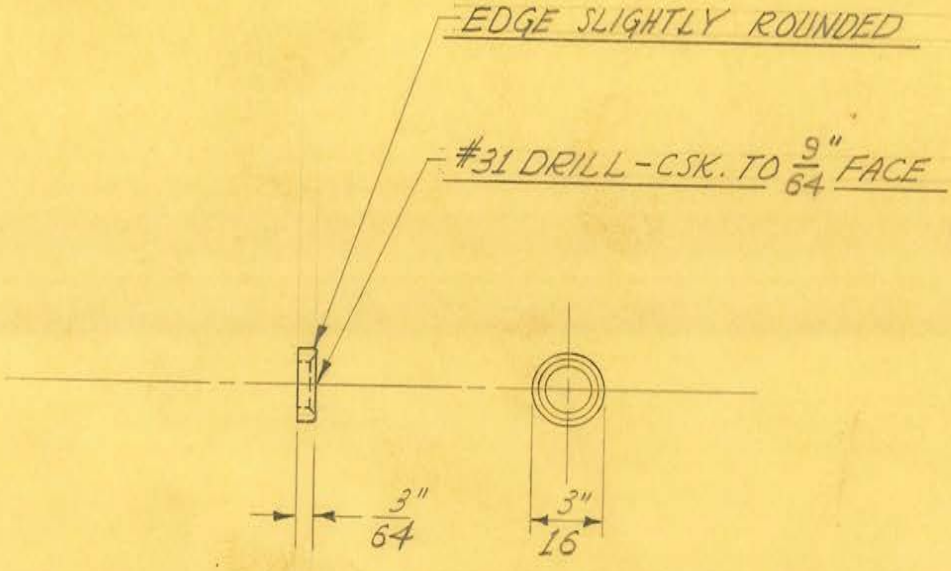


SCALE ÷ 2 DIAMETERS

1 REQUIRED

OBSOLETE

| | | | |
|---|---|---|---|
| SIZE | 3/16" DIAM. | ISSUE 4-4-38 | J.W. |
| KIND | SILVER ROD | CHANGED | |
| SHAPE | | " | |
| FINISH | | " | |
| TEMP. | | " | |
| PATT. | | " | |

**TITLE:**
FISCHER MOD. "G" SHOCKPROOF FLUOROSCOPE
FOOT SWITCH - CONTACT POINT WASHER

H. G. FISCHER & CO.
2335 WABANSIA AVE.
CHICAGO, ILL.

CAT. NO.

PART NO. 11431

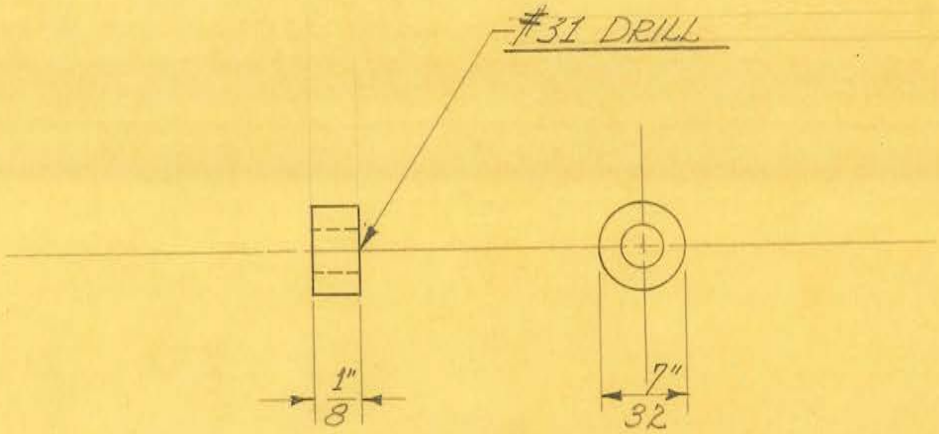


SCALE ~ 2 DIAMETERS

2 REQUIRED

OBSOLETE

| | | | | |
|---|---|---|---|---|
| SIZE | 7/32" DIAM. | ISSUE 4-4-38 | J.W. | TITLE: FISCHER MOD. "G" SHOCKPROOF FLUOROSCOPE FOOT SWITCH - BOTTOM CONTACT SPACER |
| KIND | BRASS ROD | CHANGED | | |
| SHAPE | | " | | |
| FINISH | | " | | |
| TEMP. | | " | | |
| PATT. | | " | | |

H. G. FISCHER & CO.
2335 WABANSIA AVE.
CHICAGO, ILL.

CAT. NO.

PART NO. 11432

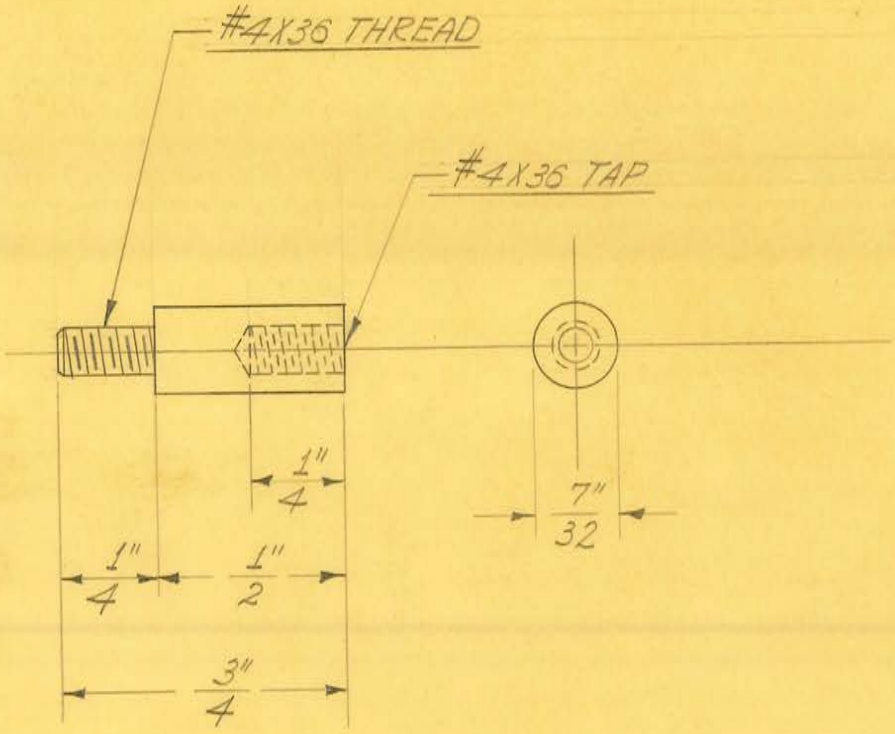


SCALE ÷ DOUBLE SIZE

2 REQUIRED

OBSOLETE

| | | | | |
|---|---|---|---|---|
| SIZE | 7/32" DIAM. | ISSUE 4-1-38 | J.W. | TITLE: FISCHER MOD. "G" SHOCKPROOF FLUOROSCOPE FOOT SWITCH – TOP CONTACT SPACER |
| KIND | BRASS ROD | CHANGED | | |
| SHAPE | | " | | |
| FINISH | | " | | |
| TEMP. | | " | | |
| PATT. | | " | | |

H. G. FISCHER & CO.
2335 WABANSIA AVE.
CHICAGO, ILL.

CAT. NO.

PART NO. 11433

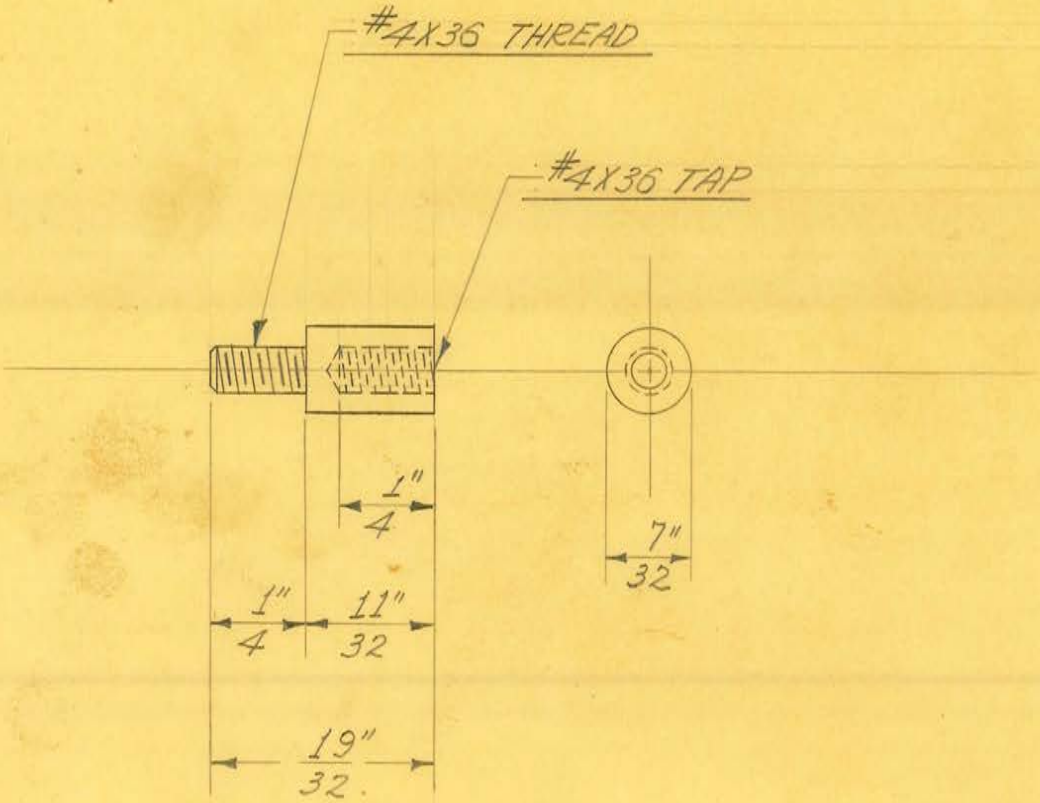


SCALE ÷ DOUBLE SIZE

2 REQUIRED

OBSOLETE

| | | | |
|---|---|---|---|
| SIZE | 7/32" DIAM. | ISSUE 4-1-38 | J.W. |
| KIND | BRASS ROD | CHANGED | |
| SHAPE | | " | |
| FINISH | | " | |
| TEMP. | | " | |
| PATT. | | " | |

**TITLE:** FISCHER MOD. "G" SHOCKPROOF FLUOROSCOPE FOOT SWITCH – CENTER CONTACT SPACER

H. G. FISCHER & CO.
2335 WABANSIA AVE.
CHICAGO, ILL.

CAT. NO.

PART NO. 11434

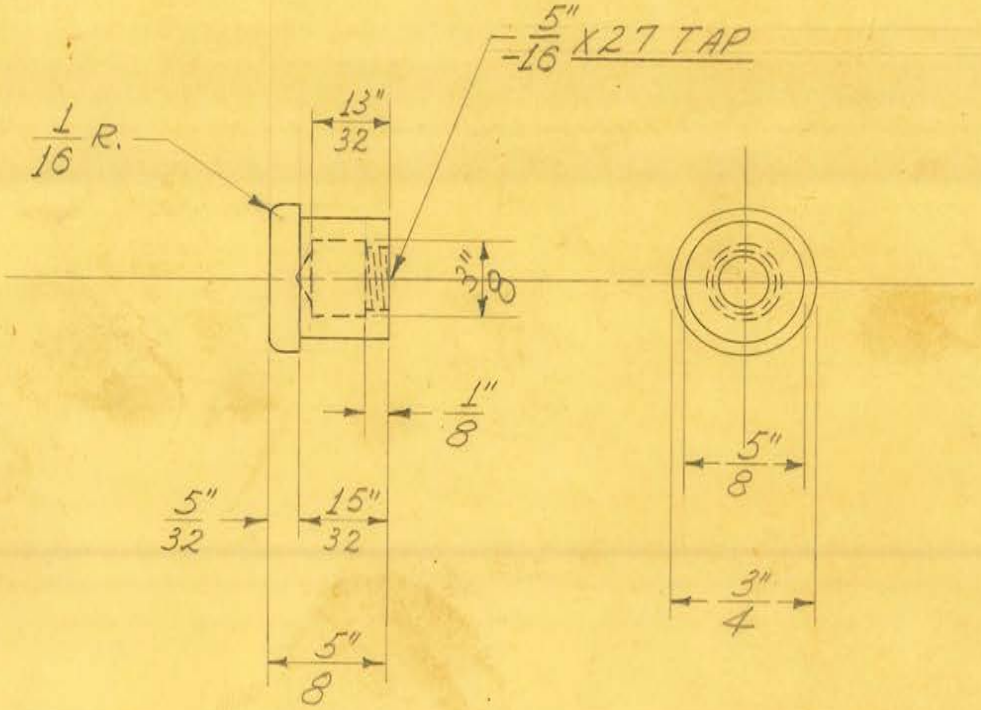


1 REQUIRED

OBSOLETE

obsolete

| | | | |
|---|---|---|---|
| SIZE | 3/4" DIAM. | ISSUE 4-1-38 | J.W. |
| KIND | BAKELITE | CHANGED | |
| SHAPE | ROD | " | |
| FINISH | | " | |
| TEMP. | | " | |
| PATT. | | " | |

**TITLE:** FISCHER MOD. "G" SHOCKPROOF FLUOROSCOPE FOOT SWITCH PUSH BUTTON

H. G. FISCHER & CO.
2335 WABANSIA AVE.
CHICAGO, ILL.

CAT. NO.

PART NO. 11435

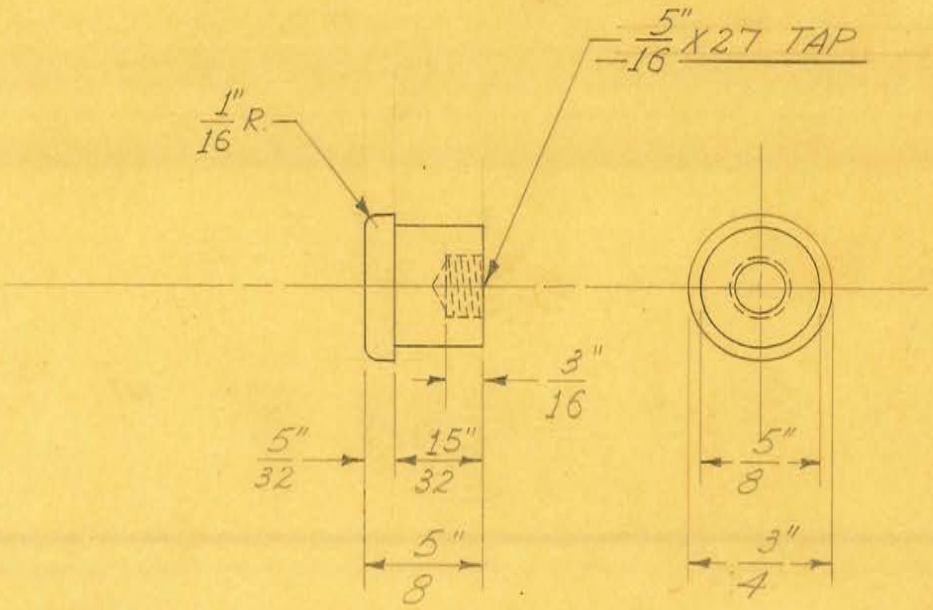


1 REQUIRED

OBSOLETE

| | | | | |
|---|---|---|---|---|
| SIZE | 3/4" DIAM. | ISSUE 7-7-38 | J.W. | TITLE: FISCHER MOD. "G" SHOCKPROOF FLUOROSCOPE FOOT SWITCH PUSH BUTTON |
| KIND | BAKELITE | CHANGED | | |
| SHAPE | ROD | " | | |
| FINISH | | " | | |
| TEMP. | | " | | |
| PATT. | | " | | |

H. G. FISCHER & CO.
2335 WABANSIA AVE.
CHICAGO, ILL.

CAT. NO.

PART NO. 11435A

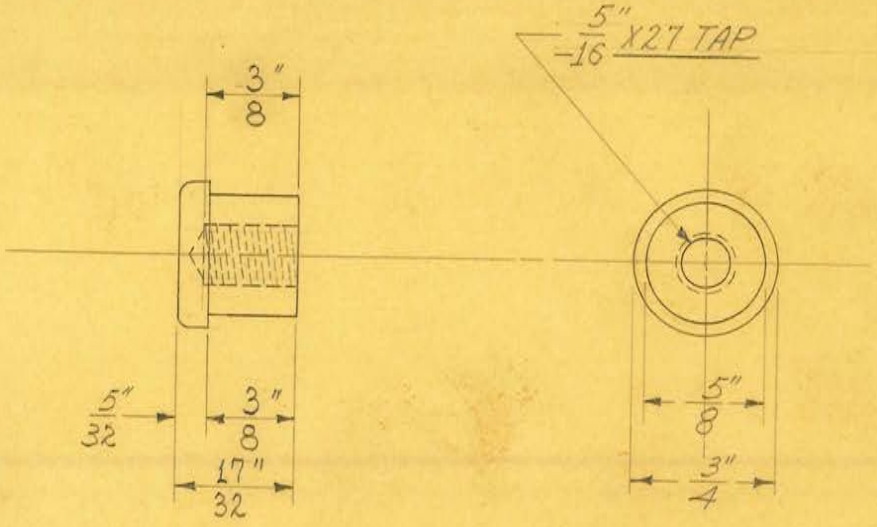


1 REQUIRED

OBSOLETE

| | | | |
|---|---|---|---|
| SIZE | 3/4" DIAM. | ISSUE 7-26-38 | J.W. |
| KIND | BAKELITE | CHANGED | |
| SHAPE | ROD | " | |
| FINISH | | " | |
| TEMP. | | " | |
| PATT. | | " | |

**TITLE:** FISCHER MOD. "G" SHOCKPROOF FLUOROSCOPE FOOT SWITCH PUSH BUTTON

H. G. FISCHER & CO.
2335 WABANSIA AVE.
CHICAGO, ILL.

CAT. NO.

PART NO. 11435B

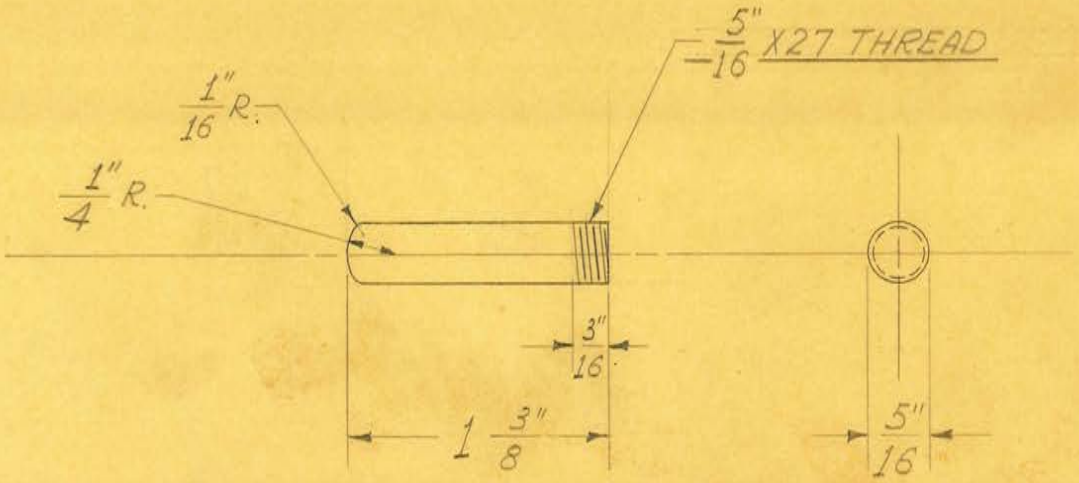


1 REQUIRED

OBSOLETE obsolete

| | | | |
|---|---|---|---|
| SIZE | 5/16" DIAM. | ISSUE 7-11-38 | J.W. |
| KIND | BRASS ROD | CHANGED | |
| SHAPE | | " | |
| FINISH | | " | |
| TEMP. | | " | |
| PATT. | | " | |

**TITLE:** FISCHER MOD. "G" SHOCKPROOF FLUOROSCOPE FOOT SWITCH PUSH BUTTON CONTACT STUD

H. G. FISCHER & CO.
2335 WABANSIA AVE.
CHICAGO, ILL.

CAT. NO.

PART NO. 11-438

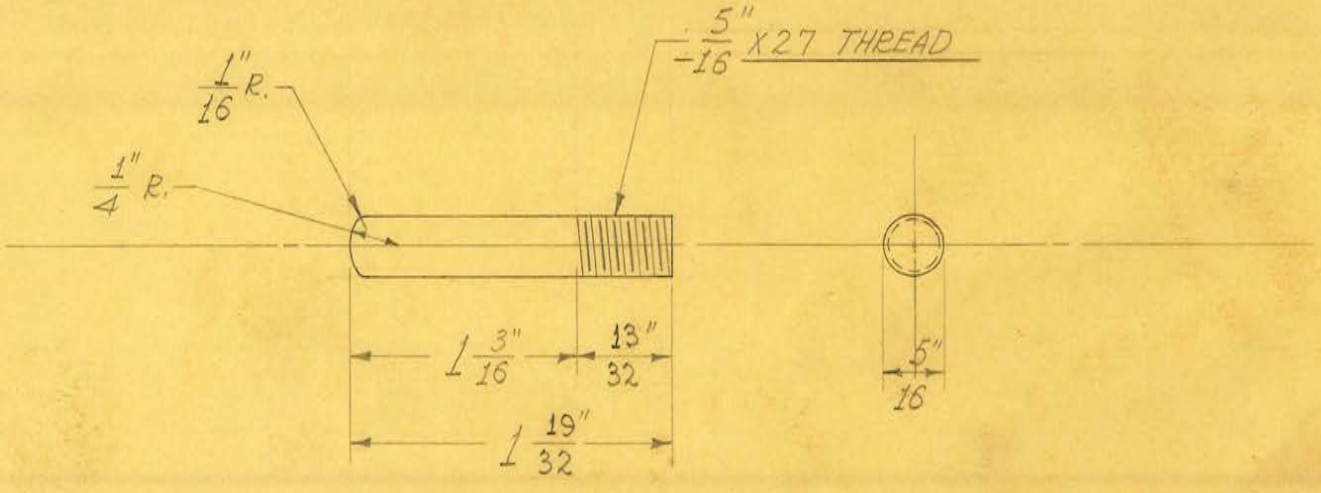


1 REQUIRED

OBSOLETE

| | | | | |
|---|---|---|---|---|
| SIZE | 5/16" DIA. | ISSUE 7-26-38 | J.W. | TITLE: FISCHER MOD. "G" SHOCKPROOF FLUOROSCOPE FOOT SWITCH PUSH BUTTON CONTACT STUD |
| KIND | BLK. BAKELITE | CHANGED | | |
| SHAPE | | " | | |
| FINISH | | " | | |
| TEMP. | | " | | |
| PATT. | | " | | |

H. G. FISCHER & CO.
2335 WABANSIA AVE.
CHICAGO, ILL.

CAT. NO.

PART NO. 11438B

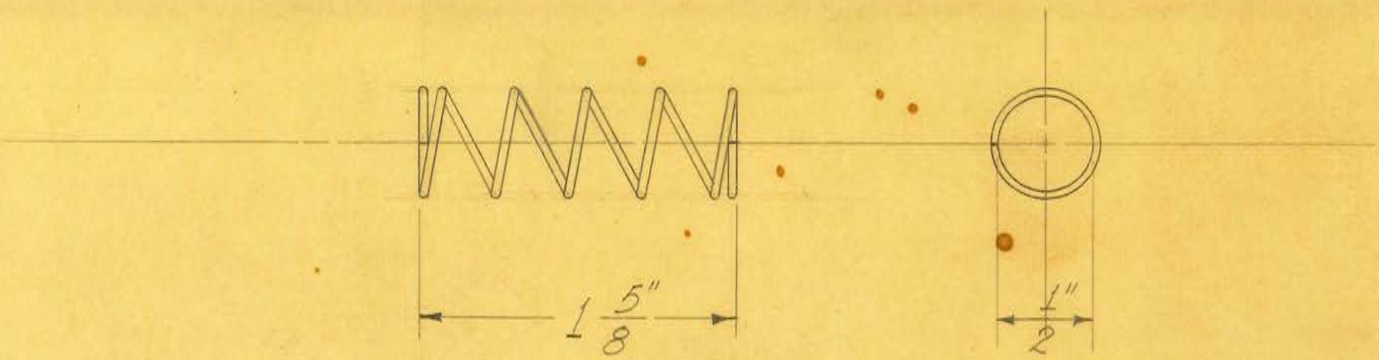


6 TURNS

1 REQUIRED

OBSOLETE

| | | | |
|---|---|---|---|
| SIZE | .040" | ISSUE 7-11-38 | J.W. |
| KIND | PIANO WIRE | CHANGED | |
| SHAPE | | " | |
| FINISH | CAD. #23 | " | |
| TEMP. | | " | |
| PATT. | | " | |

**TITLE:** FISCHER MOD. "G" SHOCKPROOF FLUOROSCOPE FOOT SWITCH PUSH BUTTON SPRING

H. G. FISCHER & CO.
2335 WABANSIA AVE.
CHICAGO, ILL.

CAT. NO.

PART NO. 11439

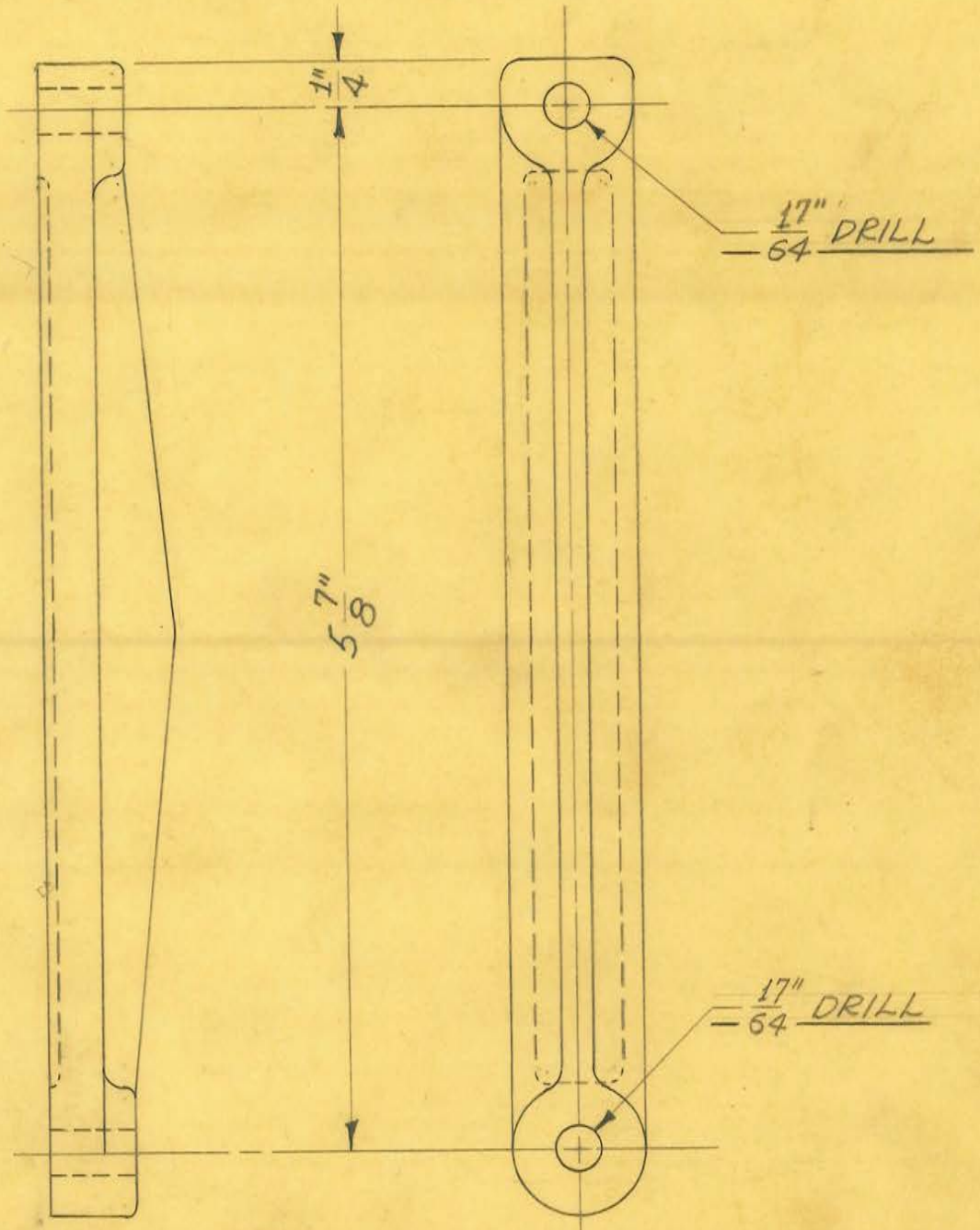


OBSOLETE

2 REQUIRED

| | | | |
|---|---|---|---|
| SIZE | #214 | ISSUE 1-26-40 | J.W. |
| KIND | ALUM. CASTING | CHANGED | |
| SHAPE | | " | |
| FINISH | | " | |
| TEMP. | | " | |
| PATT. | 1498 | " | |

**TITLE:** FISCHER MOD. "G" SHOCKPROOF FLUOROSCOPE TRANSFORMER CLAMP

H. G. FISCHER & CO.
2335 WABANSIA AVE.
CHICAGO, ILL.

CAT. NO.

PART NO. 11443F

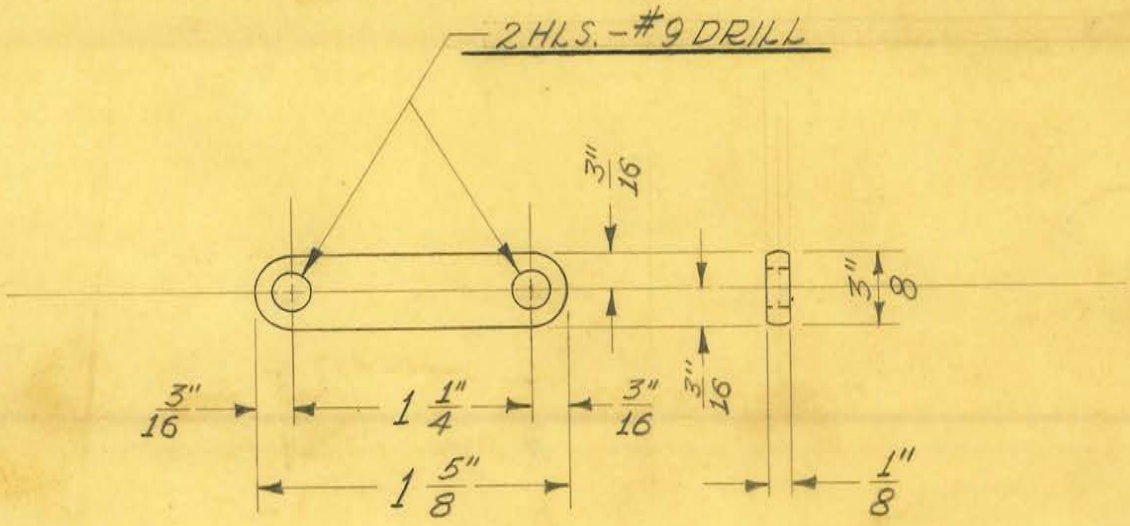


2 REQUIRED

OBSOLETE

| | | | |
|---|---|---|---|
| SIZE | 3/8" X 1/8" | ISSUE 3-15-40 | J.W. |
| KIND | FLAT WIRE | CHANGED | |
| SHAPE | | " | |
| FINISH | | " | |
| TEMP. | | " | |
| PATT. | | " | |

**TITLE:** FISCHER MOD. "GF-15" S.P. FLUOROSCOPE FILAMENT TRANSF. CLAMP STRAP

H. G. FISCHER & CO.
2338 WABANSIA AVE.
CHICAGO, ILL.

CAT. NO.

PART NO. 11443 1/2

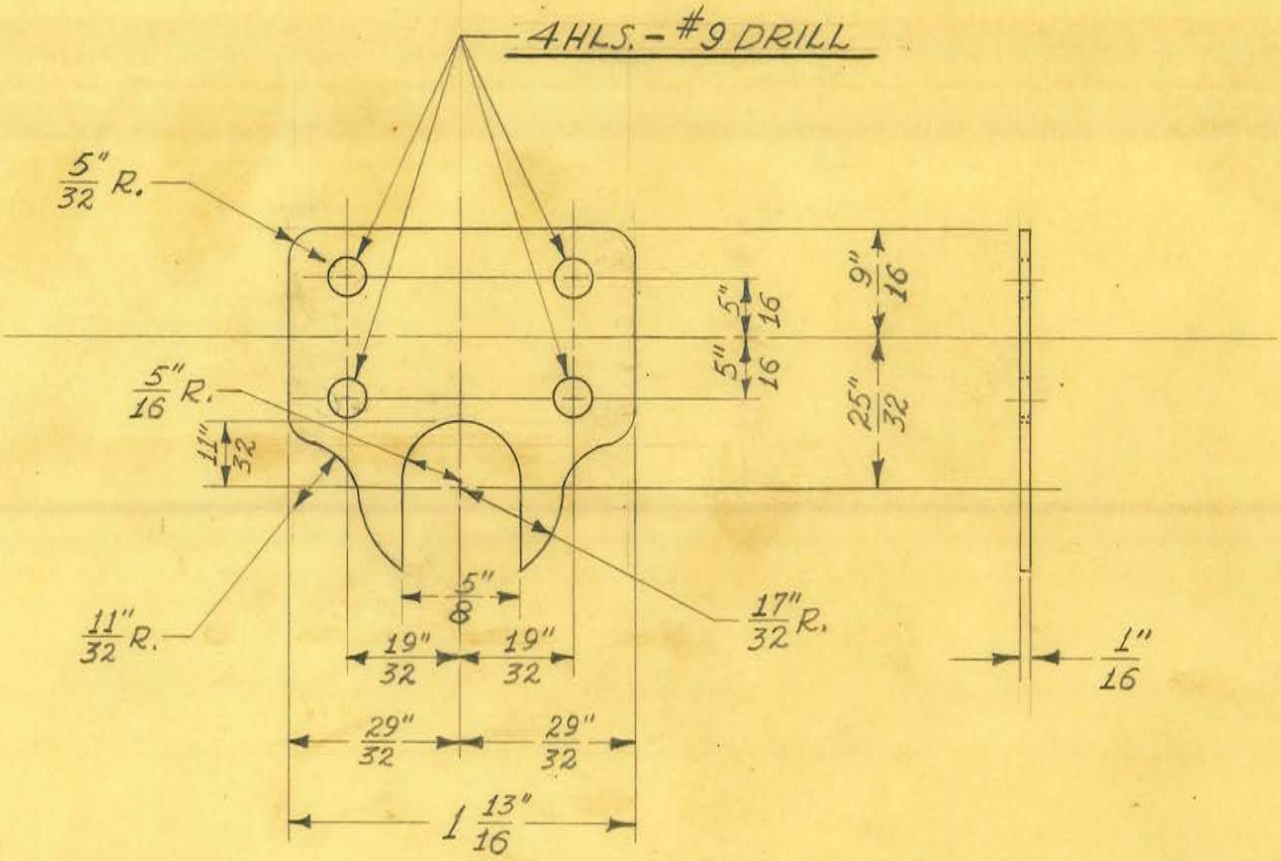


1 REQUIRED

OBSOLETE

| | | | |
|---|---|---|---|
| SIZE | 1/16" SHEET | ISSUE 2-5-40 | J.W. |
| KIND | VELLUMOID | CHANGED 9-11-40 | J.W. |
| SHAPE | | " | |
| FINISH | | " | |
| TEMP. | | " | |
| PATT. | | " | |

**TITLE:** FISCHER MOD. "G" SHOCKPROOF FLUOROSCOPE TRANSFORMER SUPPORT - GASKET - LEFT

H. G. FISCHER & CO.
2338 WABANSIA AVE.
CHICAGO, ILL.

CAT. NO.

PART NO. 11444A

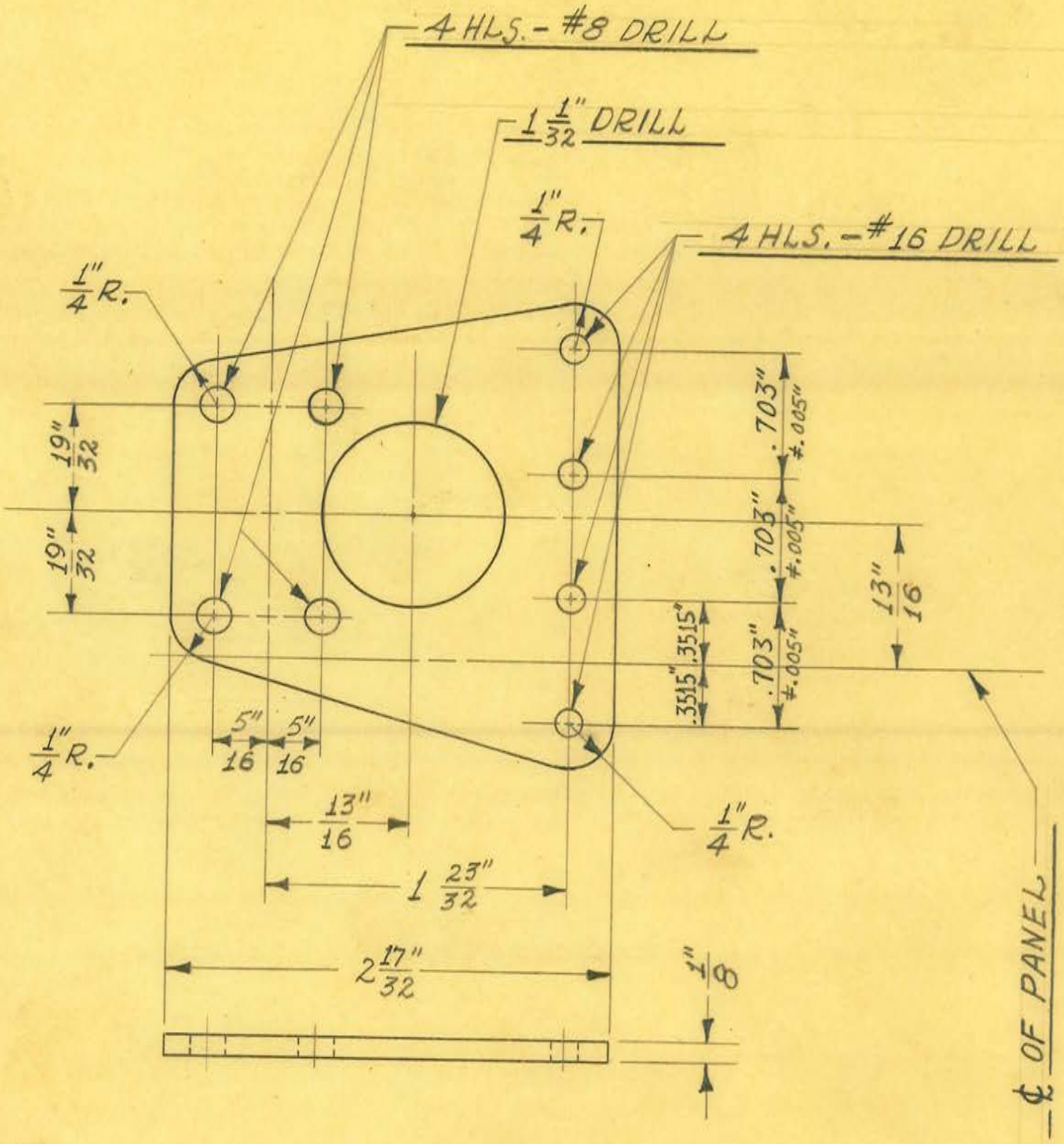


1 REQUIRED

OBSOLETE obsolete

| | | | |
|---|---|---|---|
| SIZE | 1/8" SHEET | ISSUE 2-1-40 | J.W. |
| KIND | C.R. STEEL | CHANGED | |
| SHAPE | | " | |
| FINISH | DU-LITE #8 | " | |
| TEMP. | | " | |
| PATT. | | " | |

**TITLE:** FISCHER MOD. "GF-15" S.P. FLUOROSCOPE TRANSF. MOUNTING PLATE -LEFT

H. G. FISCHER & CO.
2335 WABANSIA AVE.
CHICAGO, ILL.

CAT. NO.

PART NO. 11446

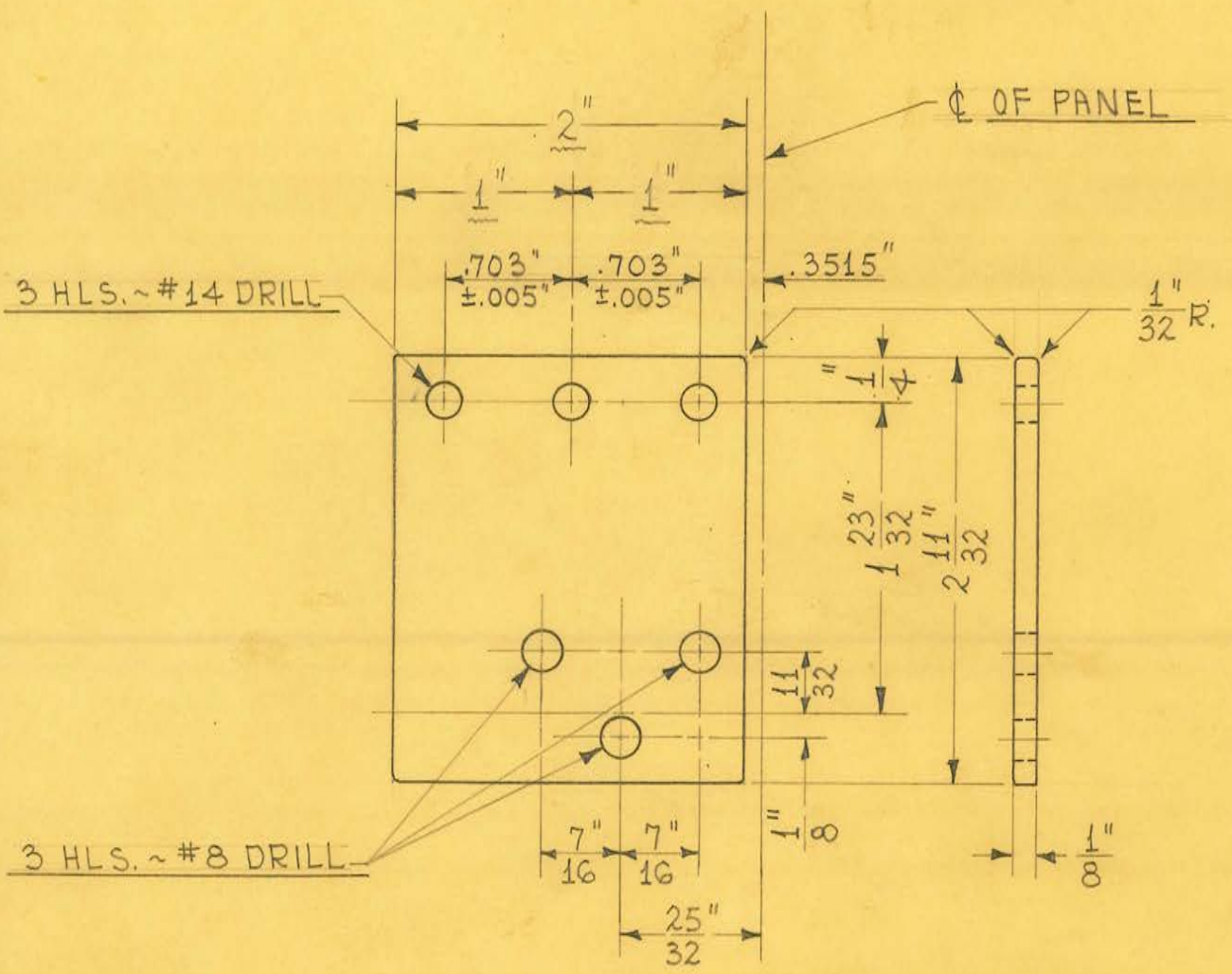


2 REQUIRED

OBSOLETE

| | | | |
|---|---|---|---|
| SIZE | 1/8" X 2" | ISSUE 3-23-45 | HE. |
| KIND | STRIP | CHANGED | |
| ~~SHAPE~~ | C.R. STEEL | " | |
| FINISH | CAD. #23 | " | |
| TEMP. | | " | |
| PATT. | | " | |

**TITLE:** FISCHER MOD. "GF-15" S.P. FLUOROSCOPE TRANSFORMER MOUNTING PLATE

H. G. FISCHER & CO.
2335 WABANSIA AVE.
CHICAGO. ILL.

CAT. NO.

PART NO. 1144GA

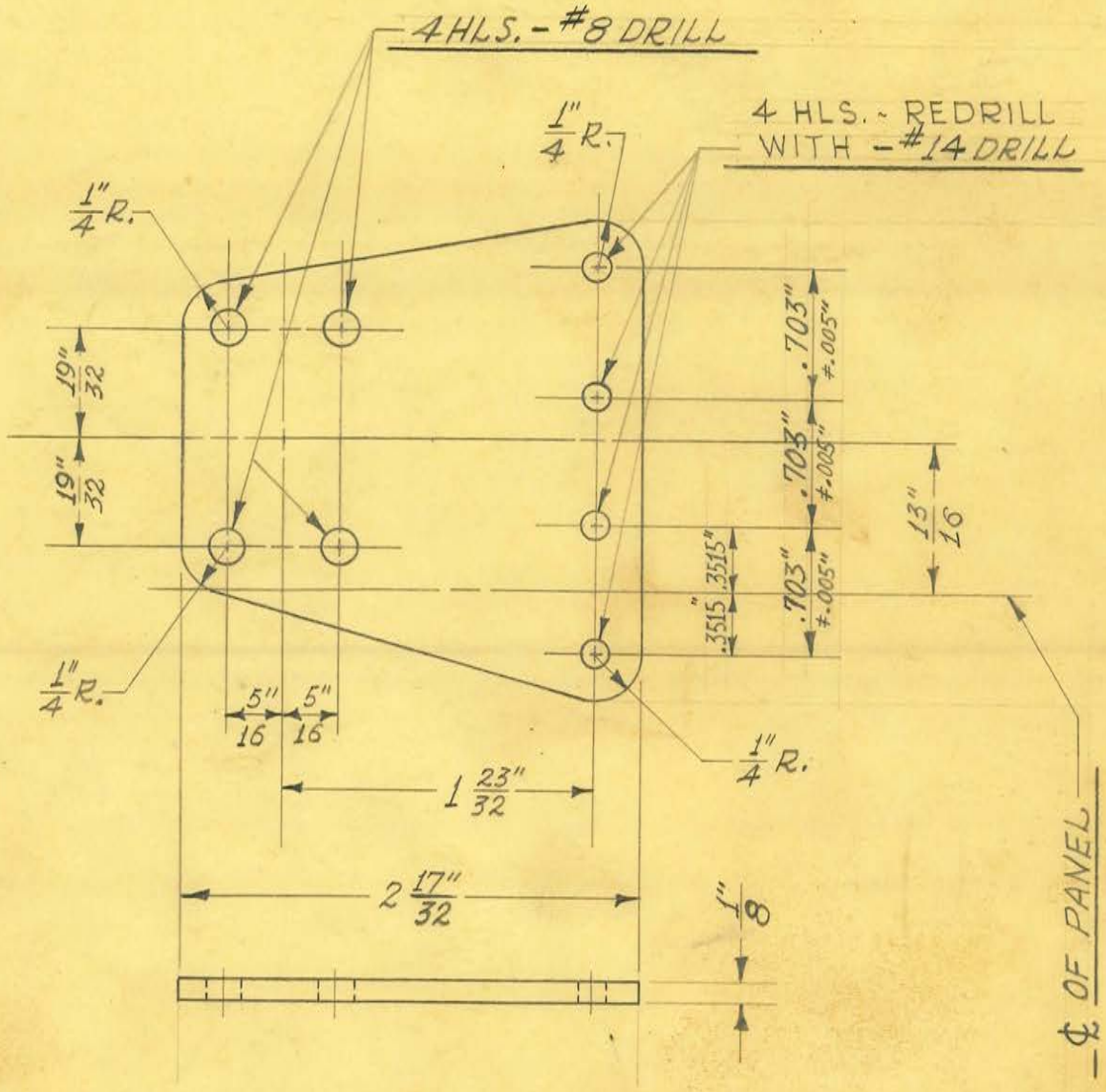


2 REQUIRED

OBSOLETE

Obsolete

CAD. #23 - SUB. WH. CHR. #3

| | | | |
|---|---|---|---|
| SIZE | 1/8" SHEET | ISSUE 2-1-40 | J.W. |
| KIND | C.R. STEEL | CHANGED | |
| SHAPE | | " | |
| FINISH | ~~DU-LITE #8~~ | " | |
| TEMP. | | " | |
| PATT. | | " | |

**TITLE:** FISCHER MOD. "GF-15" S.P. FLUOROSCOPE TRANSF. MOUNTING PLATE - RIGHT

H. G. FISCHER & CO.
2335 WABANSIA AVE.
CHICAGO, ILL.

CAT. NO.

PART NO. 11446 1/2

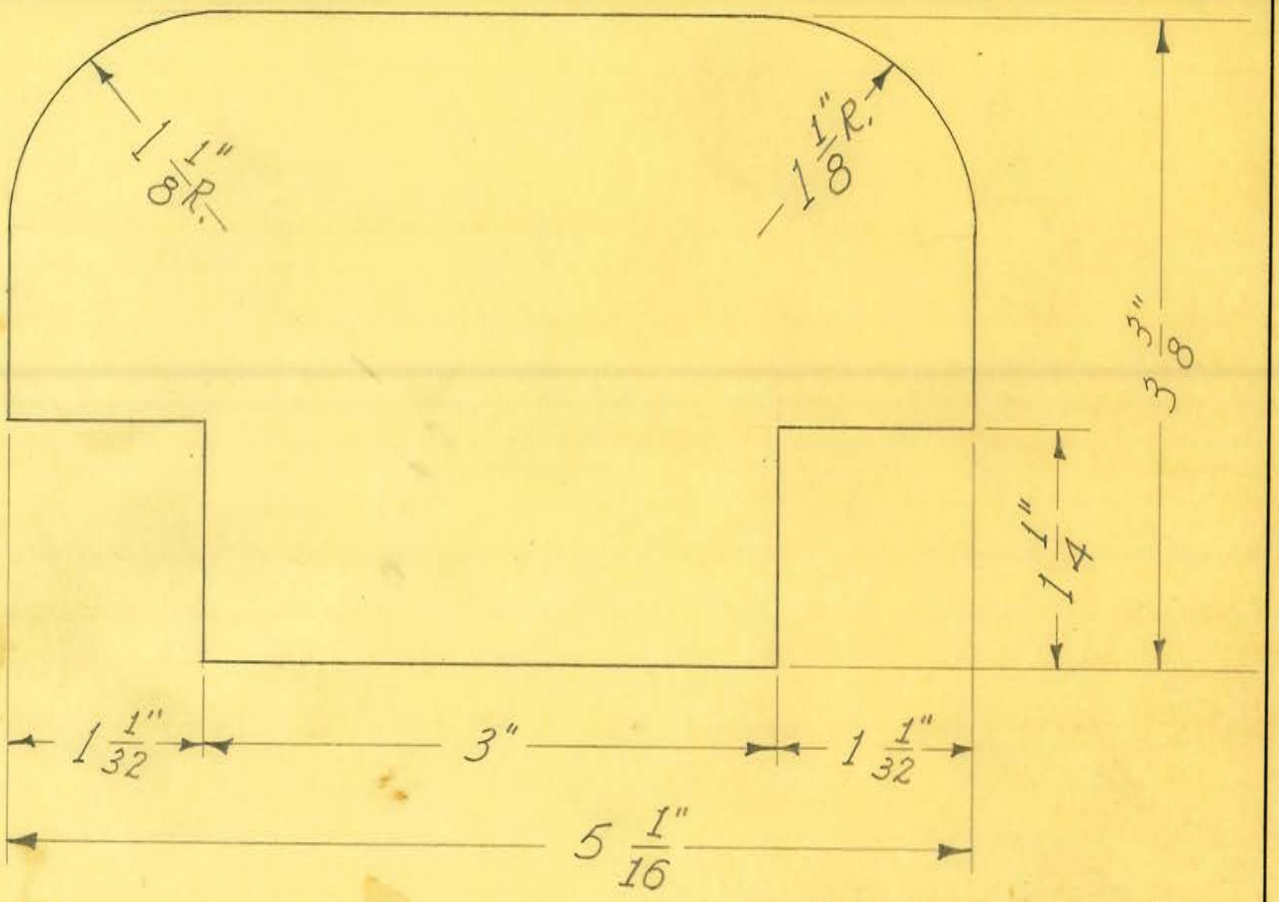


OBSOLETE

| | | | | |
|---|---|---|---|---|
| SIZE | | ISSUE 2-22-37 | J.W. | TITLE: SHOCKPROOF DENTAL X CONTACTOR INSULATOR |
| KIND | | CHANGED | | |
| SHAPE | | " | | |
| FINISH | | " | | |
| TEMP. | | " | | |
| PATT. | | " | | |

H. G. FISCHER & CO.
2335 WABANSIA AVE.
CHICAGO, ILL.

CAT. NO.

PART NO. 9590 1/2

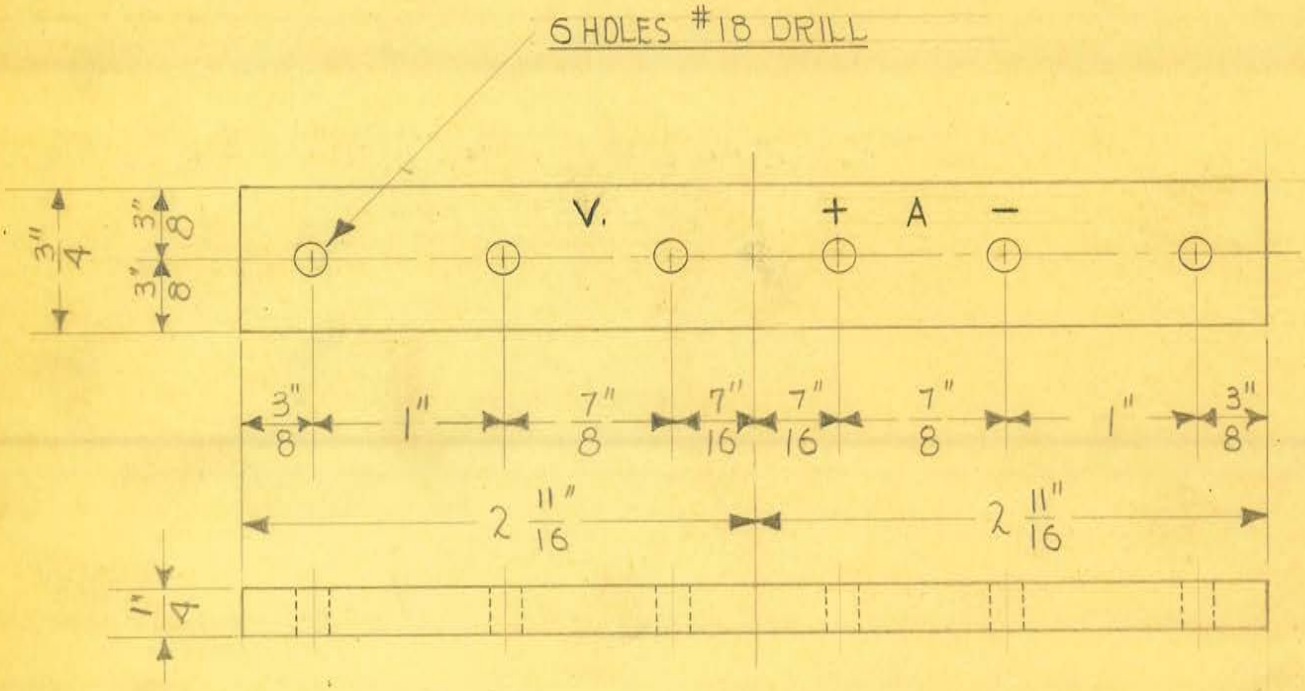


1 REQUIRED

OBSOLETE

| | | | |
|---|---|---|---|
| SIZE | 1/4" RICHELAIN | ISSUE 5-14-35 | J.W. |
| KIND | BAK. SHEET | CHANGED | |
| SHAPE | | " | |
| FINISH | | " | |
| TEMP. | | " | |
| PATT. | | " | |

**TITLE:** SHOCKPROOF DENTAL X VOLT METER TERMINAL BOARD (ENGRAVED)

H. G. FISCHER & CO.
2335 WABANSIA AVE.
CHICAGO, ILL.

CAT. NO.

PART NO. 9591

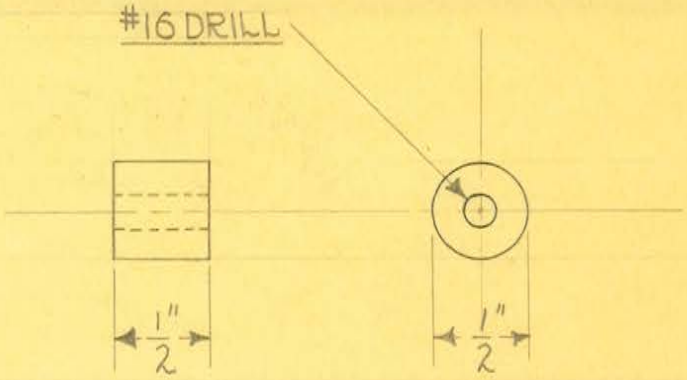


2 REQUIRED

OBSOLETE

| | | | |
|---|---|---|---|
| SIZE | 1/2" BAK. ROD | ISSUE 5-14-35 | J.W. |
| KIND | | CHANGED | |
| SHAPE | | " | |
| FINISH | | " | |
| TEMP. | | " | |
| PATT. | | " | |

**TITLE:** SHOCKPROOF DENTAL X VOLT METER TERMINAL BOARD SPACER

| | | |
|---|---|---|
| H. G. FISCHER & CO. 2335 WABANSIA AVE. CHICAGO, ILL. | CAT. NO. | PART NO. 9592 |

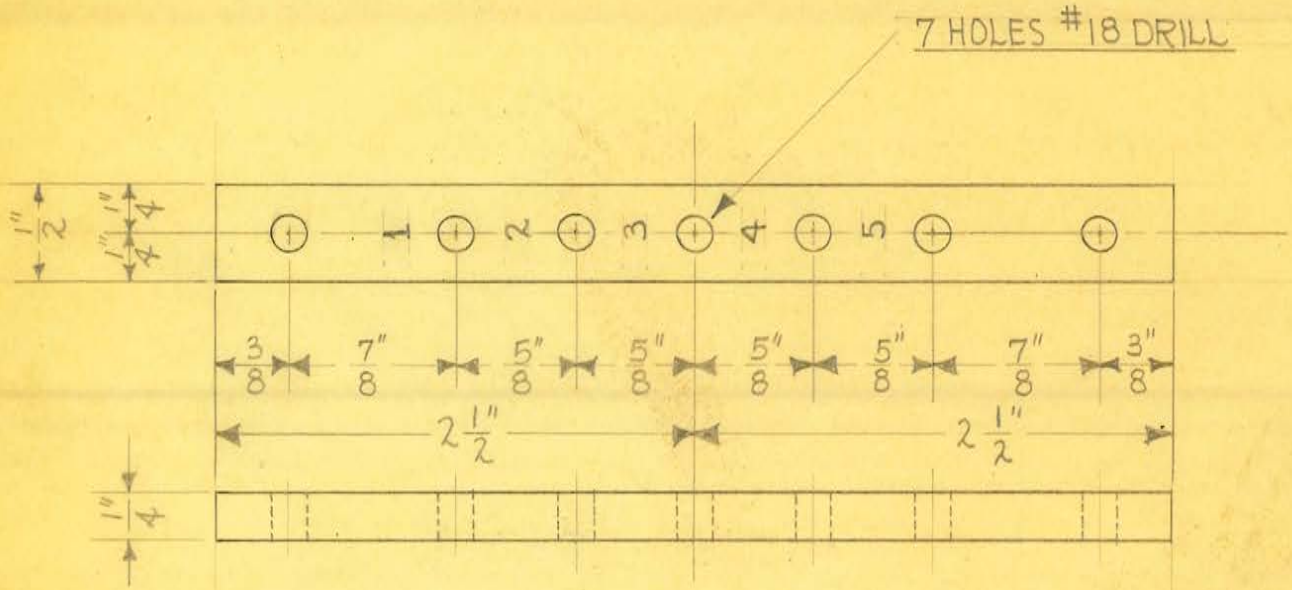


2 REQUIRED

OBSOLETE

| | | | |
|---|---|---|---|
| SIZE | 1/4" RICHELAIN | ISSUE 5-14-35 | J.W. |
| KIND | BAK. SHEET | CHANGED | |
| SHAPE | | " | |
| FINISH | | " | |
| TEMP. | | " | |
| PATT. | | " | |

**TITLE:** SHOCKPROOF DENTAL X TIMER & VOLTAGE CHANGE TERMINAL BOARD

H. G. FISCHER & CO.
2335 WABANSIA AVE.
CHICAGO, ILL.

CAT. NO.

PART NO. 9593

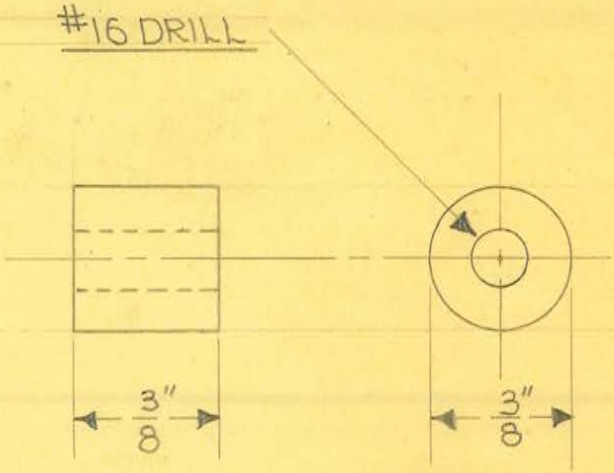


SCALE – 2 DIAM.

4 REQUIRED

OBSOLETE

| | | | |
|---|---|---|---|
| SIZE | 3/8" RAK. ROD | ISSUE 5-14-35 | J.W. |
| KIND | | CHANGED | |
| SHAPE | | " | |
| FINISH | | " | |
| TEMP. | | " | |
| PATT. | | " | |

**TITLE:** SHOCKPROOF DENTAL X TIMER & VOLTAGE CHANGE TERM. BOARD SPACER

H. G. FISCHER & CO.
2335 WABANSIA AVE.
CHICAGO, ILL.

CAT. NO.

PART NO. 9593 1/2

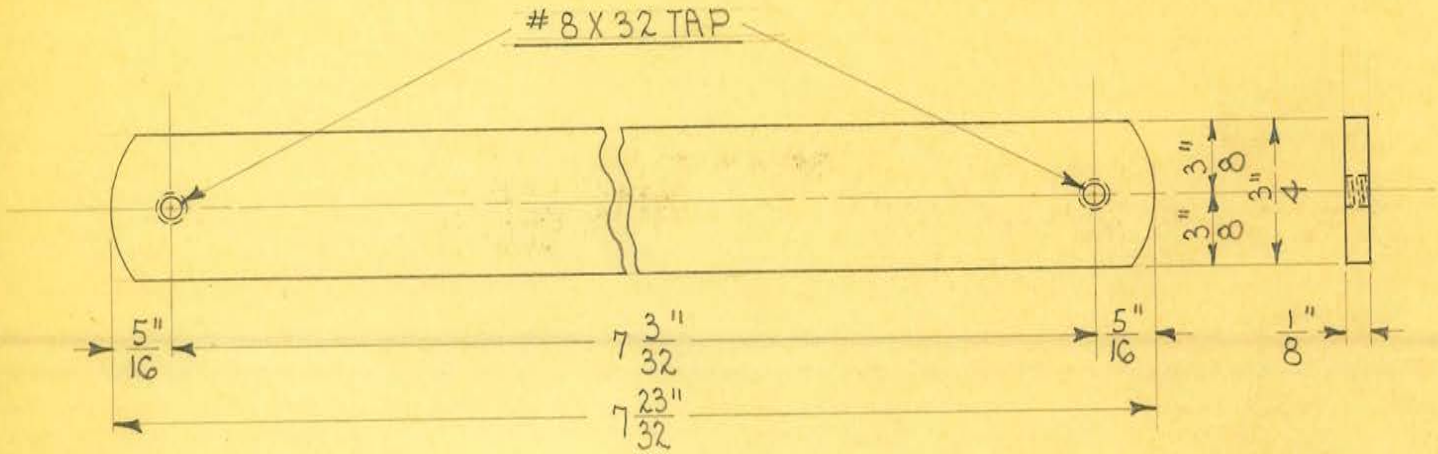


3 REQUIRED

OBSOLETE

| | | | |
|---|---|---|---|
| SIZE | 1/8" X 3/4" | ISSUE 5-17-35 | A.E. |
| KIND | C.R. STEEL | CHANGED | |
| SHAPE | | " | |
| FINISH | BLACK #80 | " | |
| TEMP. | | " | |
| PATT. | | " | |

**TITLE:** SHOCKPROOF DENTAL "X" TRANSFORMER SUPPORTING STRIP

H. G. FISCHER & CO.
2335 WABANSIA AVE.
CHICAGO, ILL.

CAT. NO.

PART NO. 9594

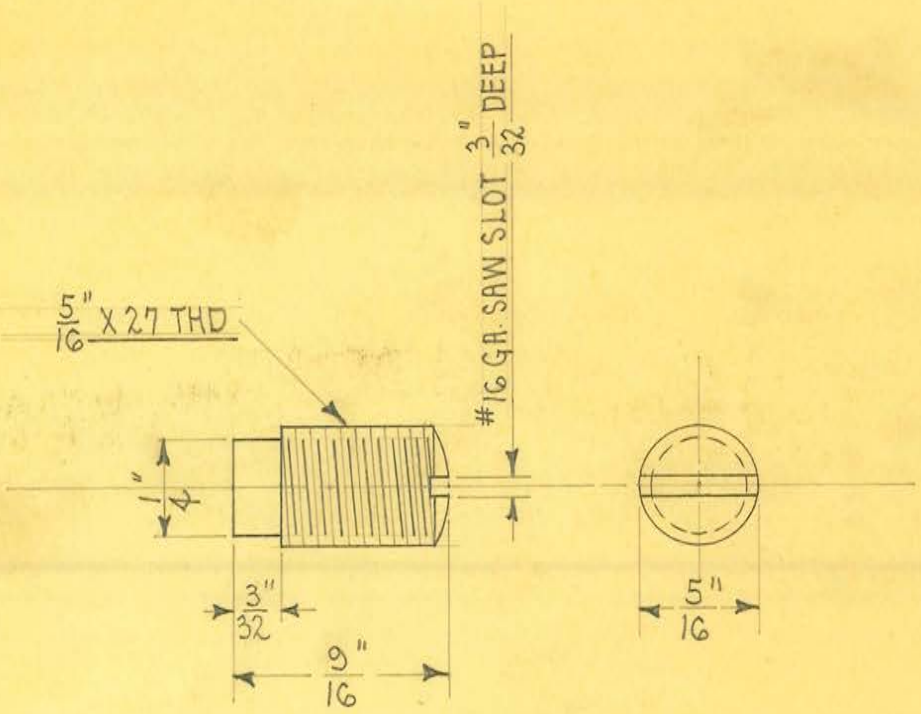


2 REQUIRED

OBSOLETE

| | | | |
|---|---|---|---|
| SIZE | 5/16" DIAM. | ISSUE 5-17-35 | A.E. |
| KIND | C.R. STEEL | CHANGED | |
| SHAPE | | " | |
| FINISH | CHROME #2 | " | |
| TEMP. | | " | |
| PATT. | | " | |

**TITLE:** SHOCKPROOF DENTAL "X" REAR CASE TUBE CAP STUD DOWELL

H. G. FISCHER & CO.
2335 WABANSIA AVE.
CHICAGO, ILL.

CAT. NO.

PART NO. 9595

2 HOLES # 8 DRILL
COUNTERSUNK FOR 10X32 F. HD. SCREW

2 HOLES $\frac{1}{4}$ X 20 TAP

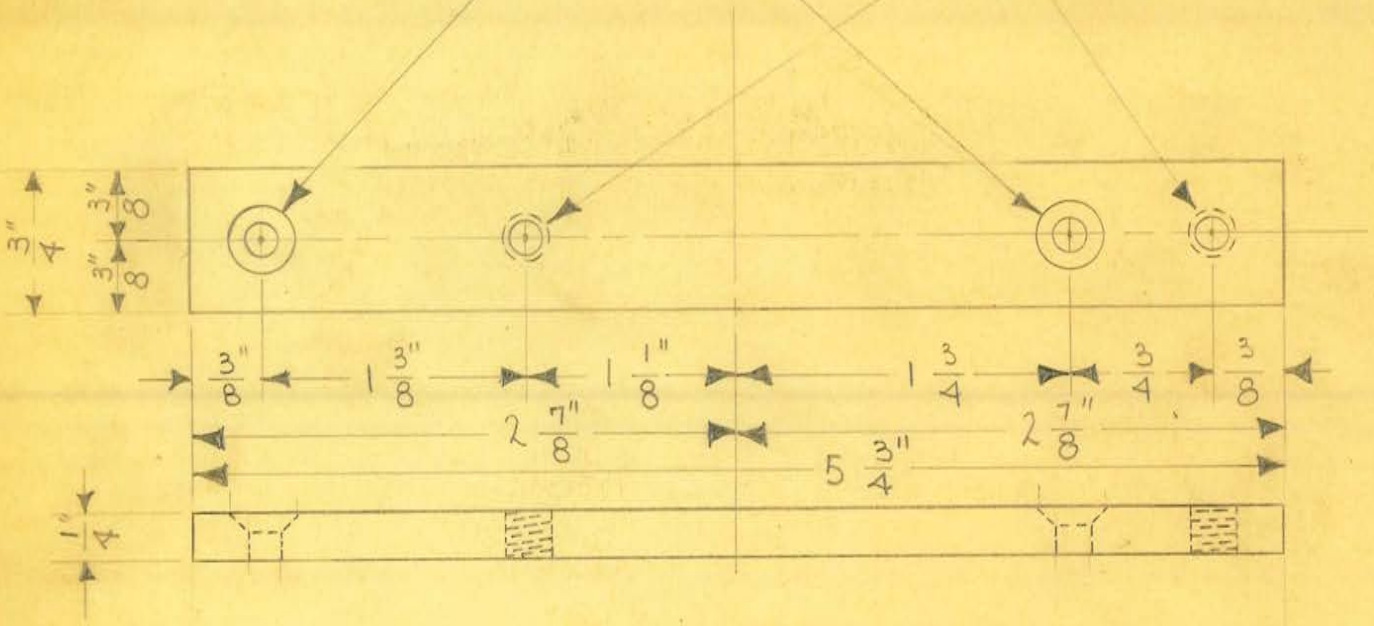


2 REQUIRED

OBSOLETE

| | | | |
|---|---|---|---|
| SIZE | 1/4 X 3/4 BAR | ISSUE 5-13-35 | J.W. |
| KIND | C.R. STEEL | CHANGED | |
| SHAPE | | " | |
| FINISH | STD. BLK. #80 | " | |
| TEMP. | | " | |
| PATT. | | " | |

**TITLE:** SHOCKPROOF DENTAL X AUTO TRANSF. SUPPORT - FRONT

H. G. FISCHER & CO.
2335 WABANSIA AVE.
CHICAGO, ILL.

CAT. NO.

PART NO. 9597

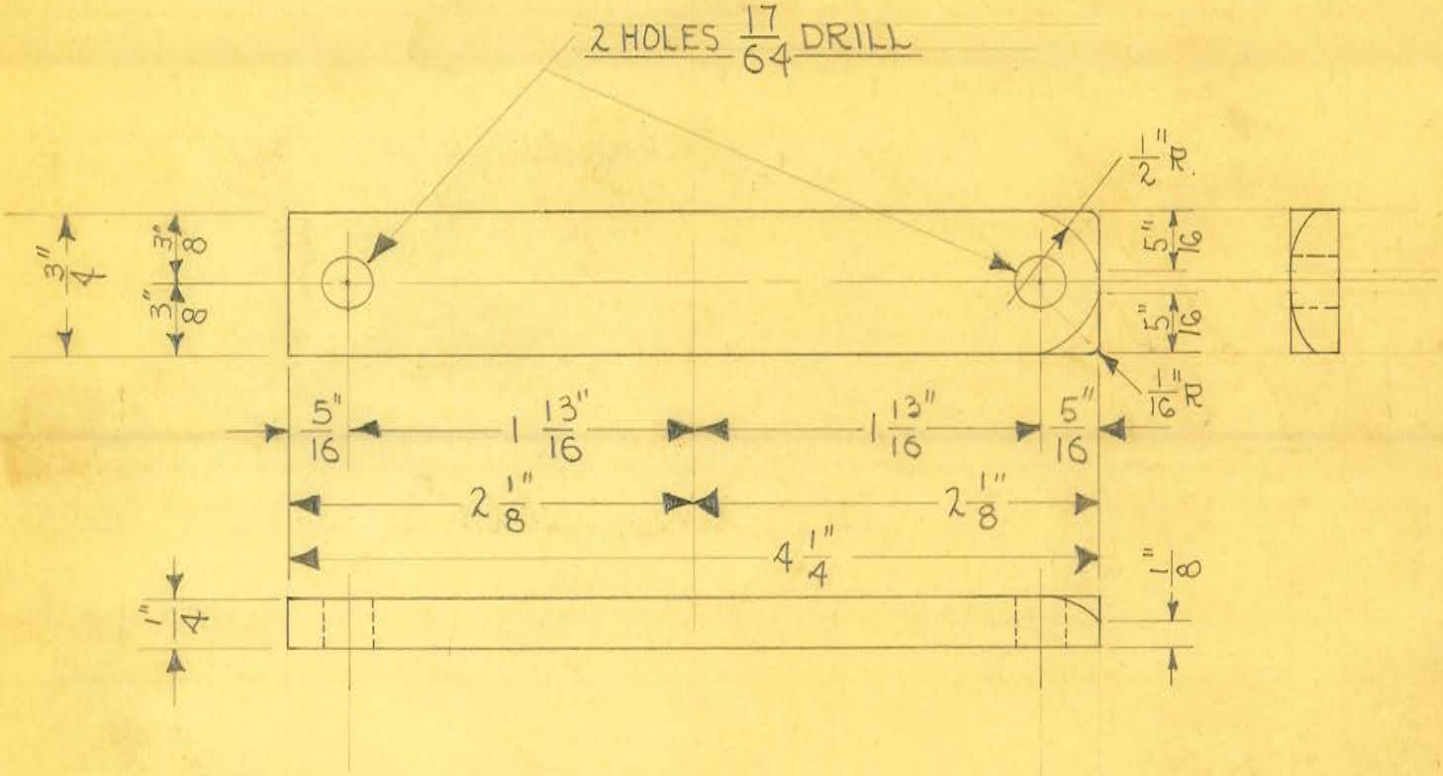


2 REQUIRED

OBSOLETE

| | | | |
|---|---|---|---|
| SIZE | 1/4" X 3/4" BAR | ISSUE 5-13-35 | J.W. |
| KIND | C.R. STEEL | CHANGED | |
| SHAPE | | " | |
| FINISH | STD. BLK. #80 | " | |
| TEMP. | | " | |
| PATT. | | " | |

**TITLE:** SHOCKPROOF DENTAL X AUTO TRANSF. SUPPORT – REAR

H. G. FISCHER & CO.
2335 WABANSIA AVE.
CHICAGO, ILL.

CAT. NO.

PART NO. 9598

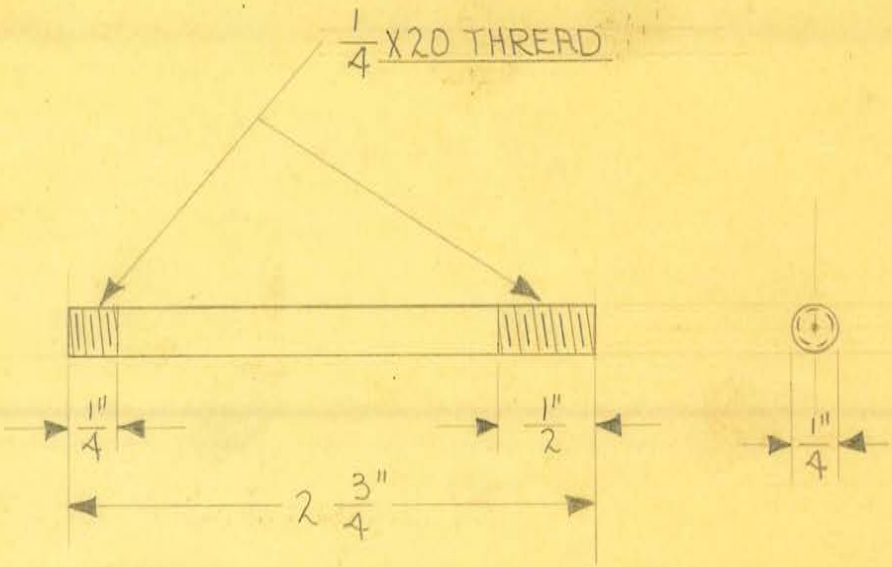


4. REQUIRED

OBSOLETE

| | | | |
|---|---|---|---|
| SIZE | 1/4" ROD | ISSUE 5-13-35 | J.W. |
| KIND | C.R.STEEL | CHANGED | |
| SHAPE | | " | |
| FINISH | | " | |
| TEMP. | | " | |
| PATT. | | " | |

**TITLE:** SHOCKPROOF DENTAL X AUTO TRANSF. SUPPORT STUD

H. G. FISCHER & CO.
2335 WABANSIA AVE.
CHICAGO, ILL.

CAT. NO.

PART NO. 9599

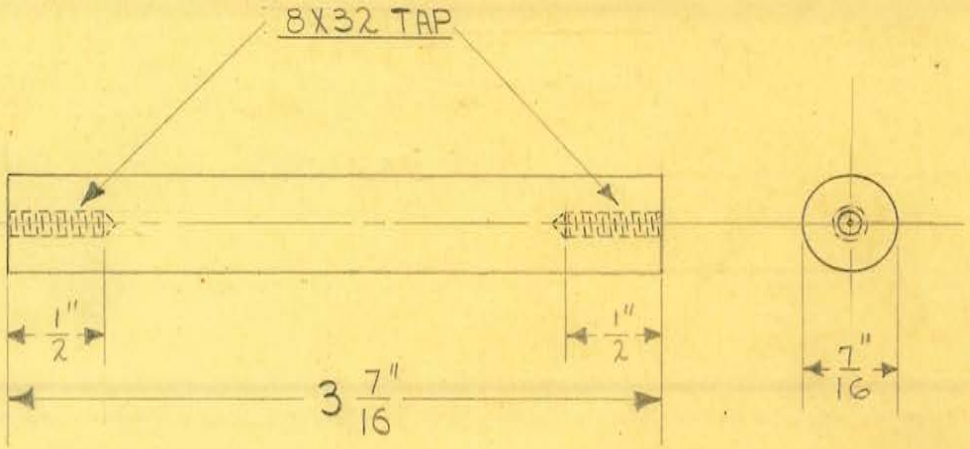


1 REQUIRED

OBSOLETE

| | | | |
|---|---|---|---|
| SIZE | 1/16" BRASS | ISSUE 5-15-35 | J.W. |
| KIND | ROD | CHANGED | |
| SHAPE | | " | |
| FINISH | | " | |
| TEMP. | | " | |
| PATT. | | " | |

**TITLE:** SHOCKPROOF DENTAL X RESISTOR SUPP. ROD-LARGE

H. G. FISCHER & CO.
2335 WABANSIA AVE.
CHICAGO, ILL.

CAT. NO.

PART NO. 9600

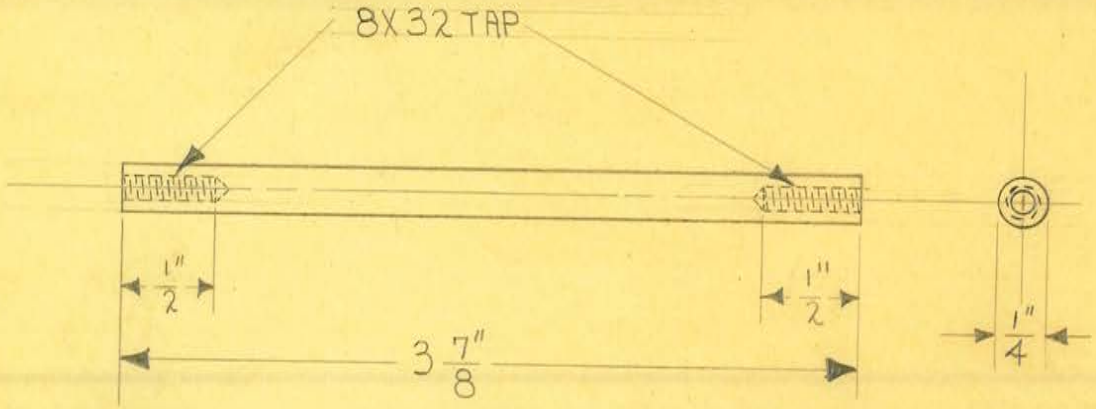


2 REQUIRED

OBSOLETE

| | | | | |
|---|---|---|---|---|
| SIZE | 1/4" BRASS | ISSUE 5-15-35 | J.W. | TITLE: SHOCKPROOF DENTAL X RESISTOR SUPP. ROD - SMALL |
| KIND | ROD | CHANGED | | |
| SHAPE | | " | | |
| FINISH | | " | | |
| TEMP. | | " | | |
| PATT. | | " | | |

H. G. FISCHER & CO.
2335 WABANSIA AVE.
CHICAGO, ILL.

CAT. NO.

PART NO. 9601

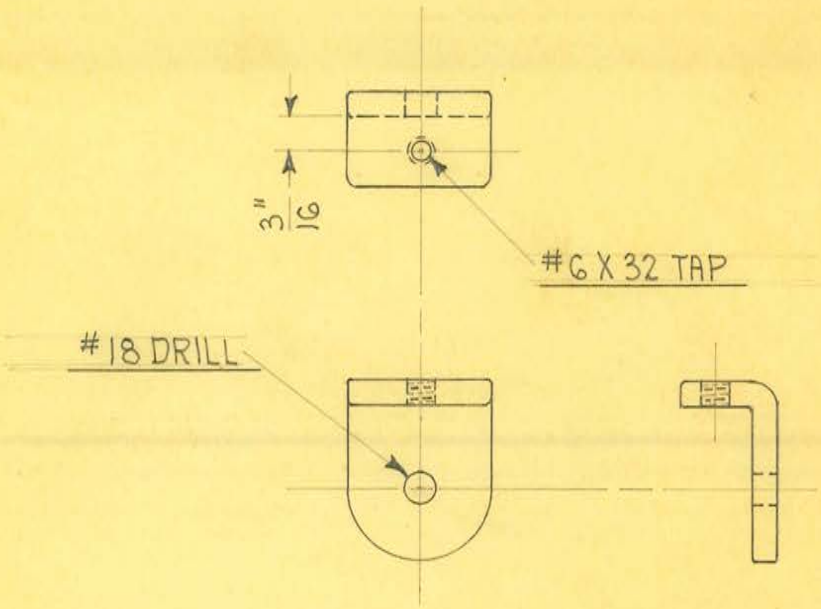


1 REQUIRED

OBSOLETE

| | | | |
|---|---|---|---|
| SIZE | | ISSUE 5-20-35 | J.E. |
| KIND | ALUM. CASTING | CHANGED | |
| SHAPE | | " | |
| FINISH | BLACK #80 | " | |
| TEMP. | | " | |
| PATT. | 9438-844 | " | |

**TITLE:** SHOCKPROOF DENTAL "X" RESISTOR SUPPORT - SMALL

| | | |
|---|---|---|
| H. G. FISCHER & CO. 2335 WABANSIA AVE. CHICAGO, ILL. | CAT. NO. | PART NO. 9602F |

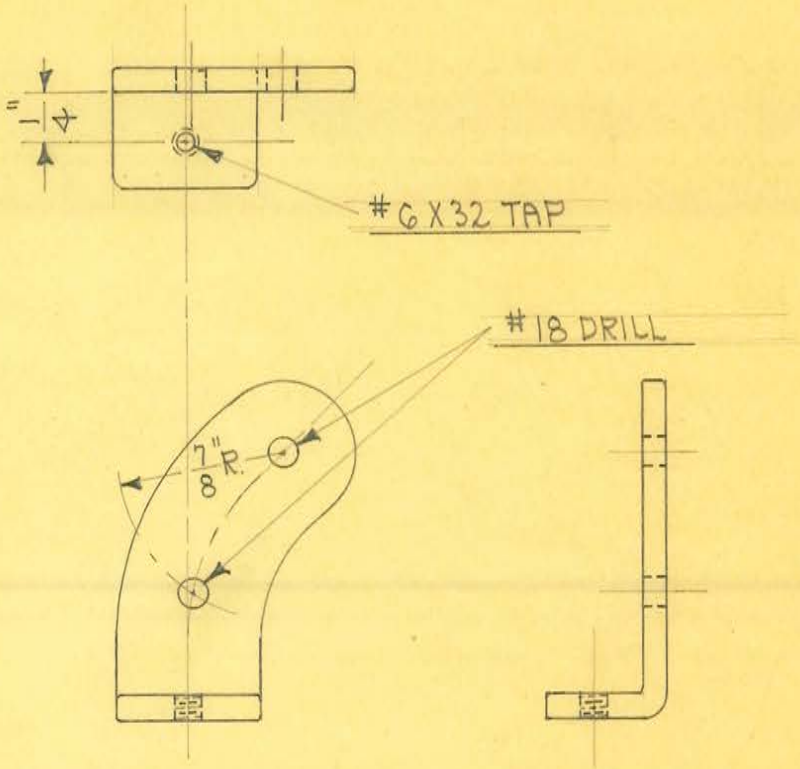


1 REQUIRED

OBSOLETE

| | | | |
|---|---|---|---|
| SIZE | | ISSUE 5-20-35 | H.E. |
| KIND | ALUM. CASTING | CHANGED | |
| SHAPE | | " | |
| FINISH | BLACK #80 | " | |
| TEMP. | | " | |
| PATT. | 9437-843 | " | |

**TITLE:** SHOCKPROOF DENTAL "X" RESISTOR SUPPORT - LARGE

H. G. FISCHER & CO.
2335 WABANSIA AVE.
CHICAGO, ILL.

CAT. NO.

PART NO. 9603F

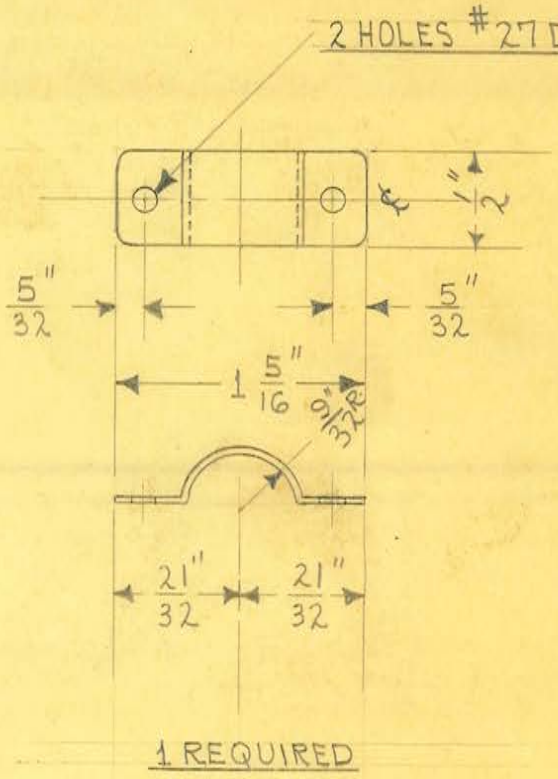


1 REQUIRED

OBSOLETE

| | | | | |
|---|---|---|---|---|
| SIZE | .032 PHOS. | ISSUE 8-7-35 | J.W. | TITLE: SHOCKPROOF DENTAL X SYNCHROTIMER CABLE CLAMP - SMALL |
| KIND | BRONZE | CHANGED | | |
| SHAPE | SHEET | " | | |
| FINISH | CRD. #23 | " | | |
| TEMP. | | " | | |
| PATT. | | " | | |

H. G. FISCHER & CO.
2335 WABANSIA AVE.
CHICAGO, ILL.

CAT. NO.

PART NO. 9604

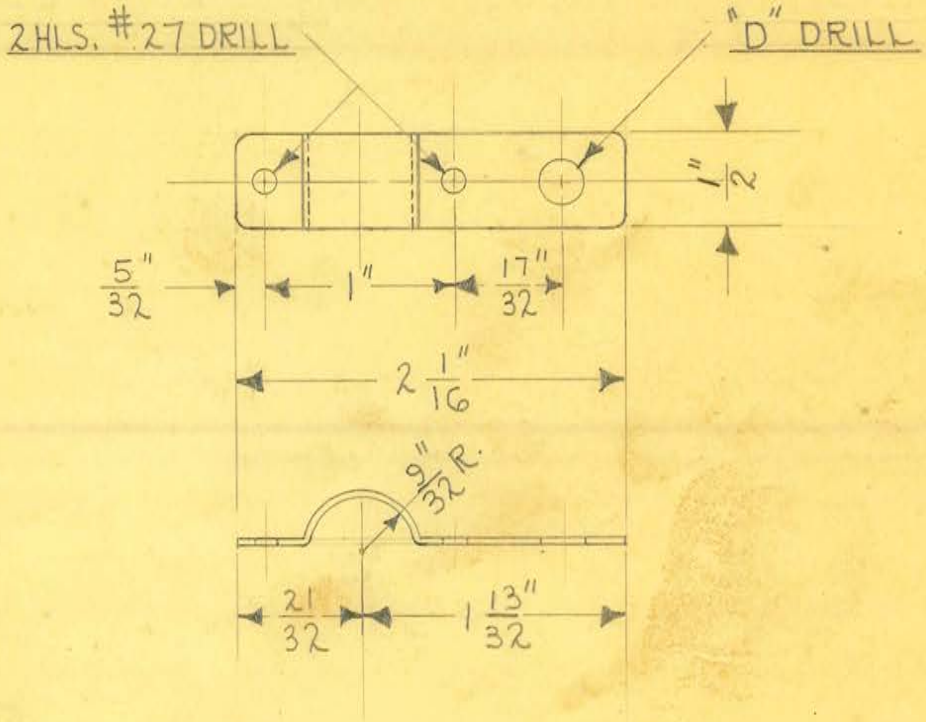


1 REQUIRED

OBSOLETE

| | | | | |
|---|---|---|---|---|
| SIZE | .032 PHOS. | ISSUE 8-7-35 | J.W. | TITLE: SHOCKPROOF DENTAL X SYNCHROTIMER CABLE CLAMP - LARGE |
| KIND | BRONZE | CHANGED | | |
| SHAPE | SHEET | " | | |
| FINISH | CAD. #23 | " | | |
| TEMP. | | " | | |
| PATT. | | " | | |

H. G. FISCHER & CO.
2335 WABANSIA AVE.
CHICAGO, ILL.

CAT. NO.

PART NO. 9605

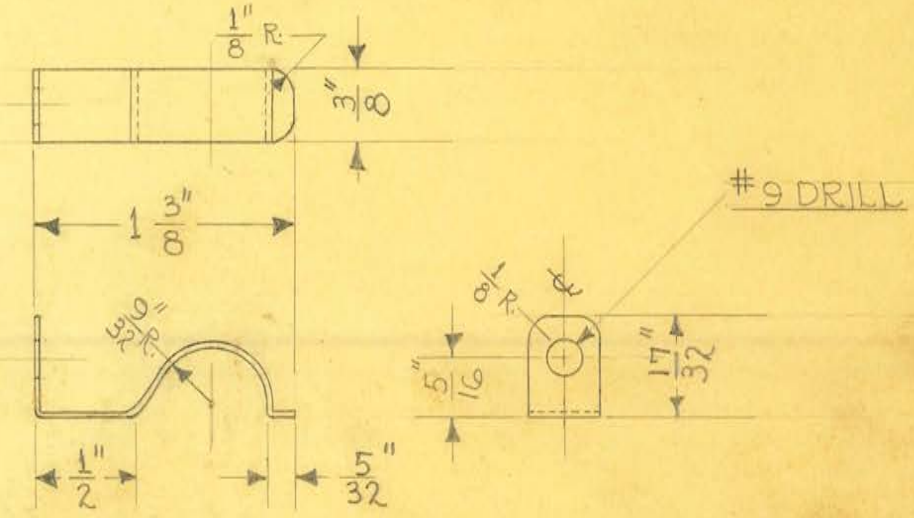


3 REQUIRED

OBSOLETE

| | | | |
|---|---|---|---|
| SIZE | .D32 PHOS. | ISSUE 8-7-35 | J.W. |
| KIND | BRONZE | CHANGED | |
| SHAPE | SHEET | " | |
| FINISH | CAD. #23 | " | |
| TEMP. | | " | |
| PATT. | | " | |

**TITLE:** SHOCKPROOF DENTAL X LINE CABLE CLAMP

| | | |
|---|---|---|
| H. G. FISCHER & CO. 2335 WABANSIA AVE. CHICAGO, ILL. | CAT. NO. | PART NO. 9606 |

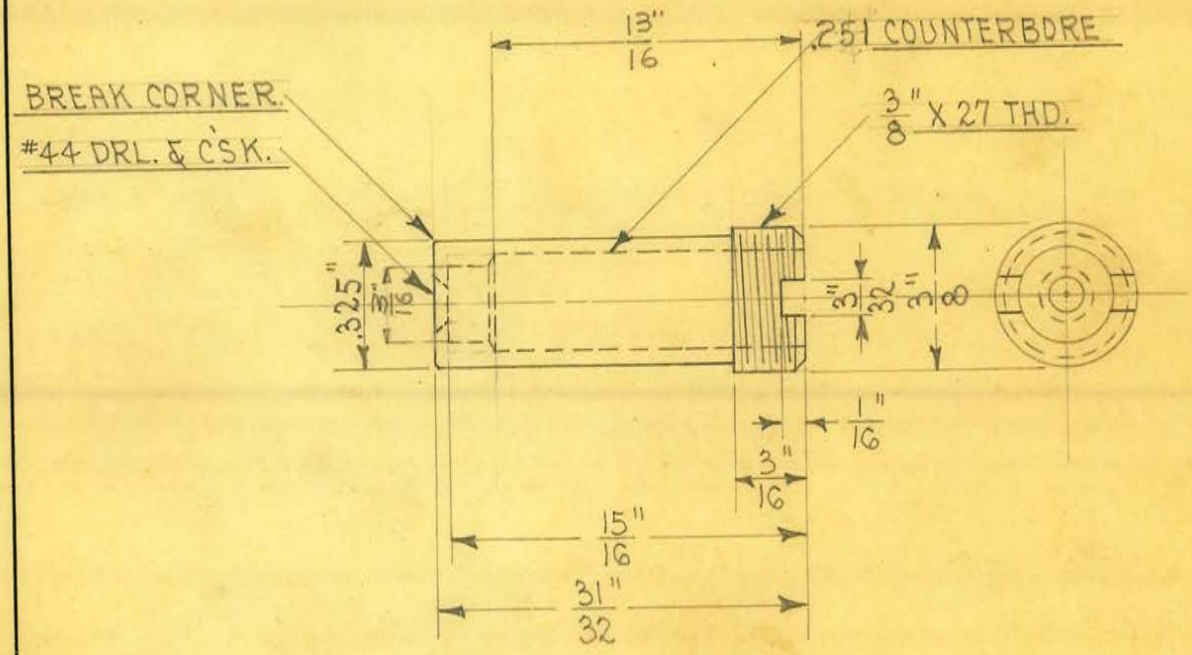


2 REQUIRED

SCALE ÷ 1" = 1/2"

OBSOLETE

| | | | |
|---|---|---|---|
| SIZE | 3/8" DIAM. | ISSUE 12-26-35 | A.E. |
| KIND | BRASS ROD | CHANGED | |
| SHAPE | | " | |
| FINISH | | " | |
| TEMP. | | " | |
| PATT. | | " | |

**TITLE:** SHOCKPROOF DENTAL "X" CATHODE CONNECTION SUPPORT INSERT BRUSH HOLDER

H. G. FISCHER & CO.
2335 WABANSIA AVE.
CHICAGO, ILL.

CAT. NO.

PART NO. 9607

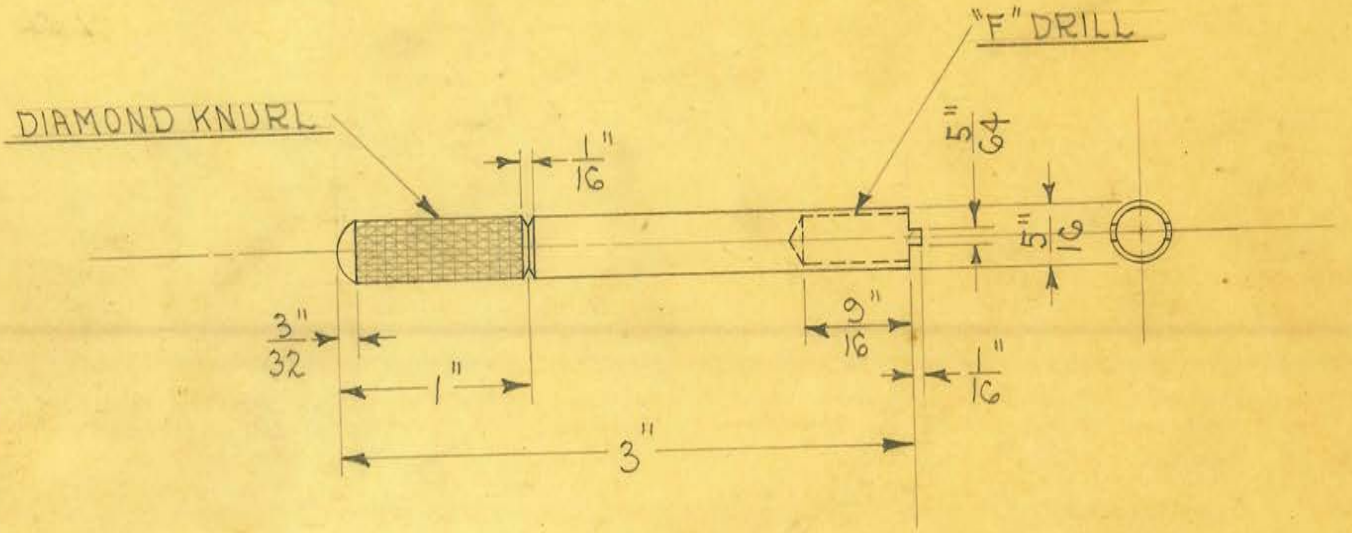


OBSOLETE

| | | | |
|---|---|---|---|
| SIZE | 5/16" DIAM. | ISSUE 12-26-35 | J.E. |
| KIND | C.R. STEEL | CHANGED | |
| SHAPE | | " | |
| FINISH | CAD. # 23 | " | |
| TEMP. | | " | |
| PATT. | | " | |

**TITLE:** SHOCKPROOF DENTAL "X" CATHODE CONNECTION SUPPORT INSERT BRUSH HOLDER WRENCH

H. G. FISCHER & CO.
2338 WABANSIA AVE.
CHICAGO, ILL.

CAT. NO.

PART NO. 9608

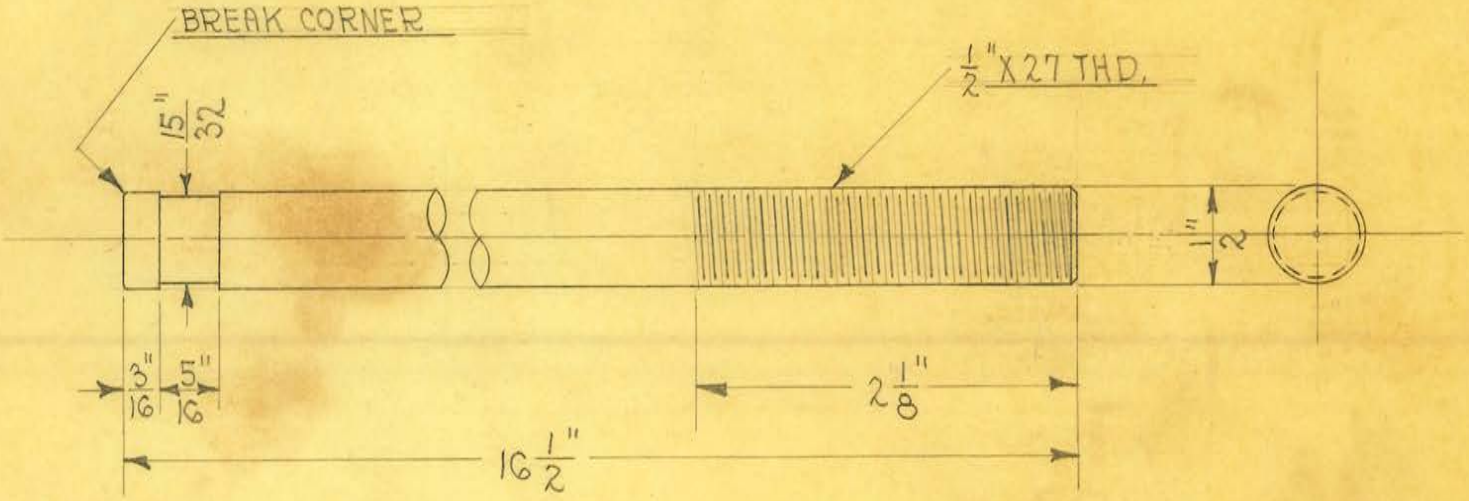


1 REQUIRED

OBSOLETE

| | | | |
|---|---|---|---|
| SIZE | 1/2" DIAM. | ISSUE 12-26-35 | A.E. |
| KIND | C.R. STEEL | CHANGED | |
| SHAPE | | " | |
| FINISH | CHROME #2 | " | |
| TEMP. | | " | |
| PATT. | | " | |

**TITLE:** SHOCKPROOF DENTAL "X" CONTROL BOX HOUSING SUPPORT ROD

H. G. FISCHER & CO.
2335 WABANSIA AVE.
CHICAGO, ILL.

CAT. NO.

PART NO. 9610

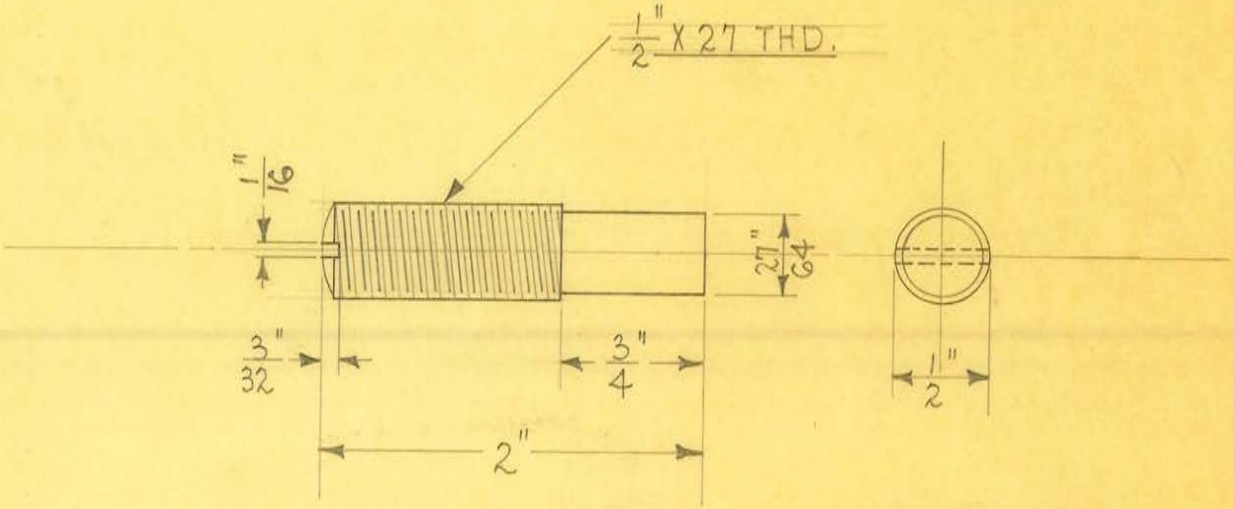


1 REQUIRED

OBSOLETE

| | | | |
|---|---|---|---|
| SIZE | 1/2" DIAM. | ISSUE 6-30-36 | A.B. |
| KIND | C.R. STEEL | CHANGED | |
| SHAPE | | " | |
| FINISH | CAD. #23 | " | |
| TEMP. | | " | |
| PATT. | | " | |

**TITLE:** SHOCKPROOF DENTAL "X" CONTROL BOX SUPPORT SHAFT

H. G. FISCHER & CO.
2335 WABANSIA AVE.
CHICAGO, ILL.

CAT. NO.

PART NO. 9610 1/2

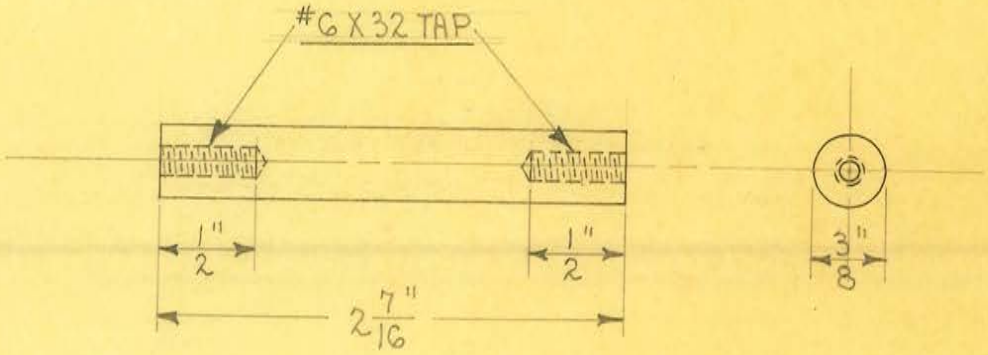


1 REQUIRED

OBSOLETE

| | | | |
|---|---|---|---|
| SIZE | 3/8" DIAM. | ISSUE 2-12-36 | 2-E |
| KIND | C.R. STEEL | CHANGED | |
| SHAPE | | " | |
| FINISH | | " | |
| TEMP. | | " | |
| PATT. | | " | |

**TITLE:** SHOCKPROOF DENTAL "X" U-BAR STOP

H. G. FISCHER & CO.
2335 WABANSIA AVE.
CHICAGO, ILL.

CAT. NO.

PART NO. 9611

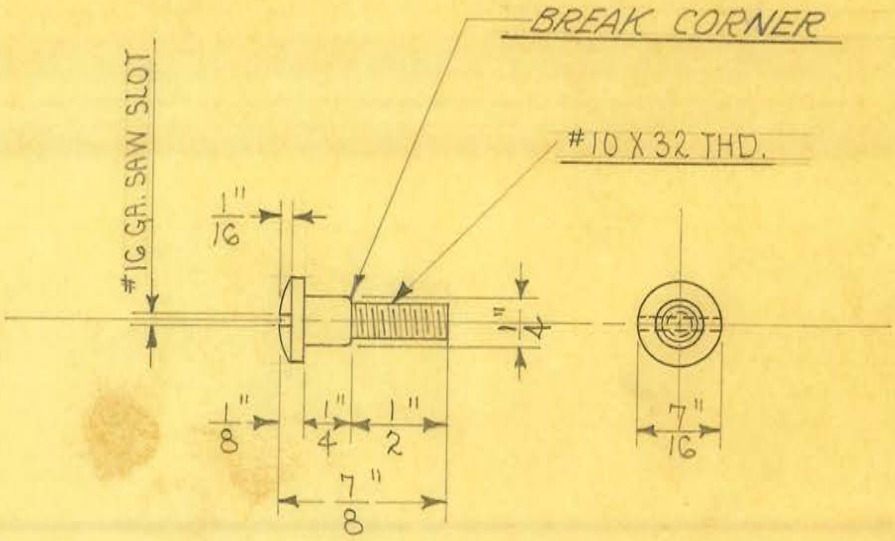


2 REQUIRED

OBSOLETE

| | | | |
|---|---|---|---|
| SIZE | 7/16" DIAM. | ISSUE 2-12-36 | A.E. |
| KIND | C.R. STEEL | CHANGED | |
| SHAPE | | " | |
| FINISH | CHROME #2 | " | |
| TEMP. | | " | |
| PATT. | | " | |

**TITLE:** SHOCKPROOF DENTAL "X" SUPPORT ARM SCREW - SHORT

H. G. FISCHER & CO.
2335 WABANSIA AVE.
CHICAGO, ILL.

CAT. NO.

PART NO. 9613

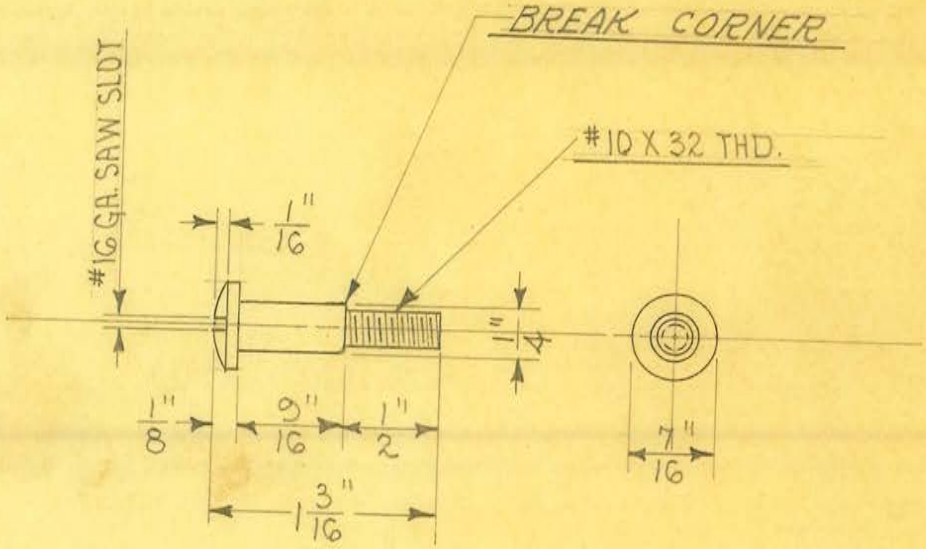


2 REQUIRED

OBSOLETE

| | | | | |
|---|---|---|---|---|
| SIZE | 7/16" DIAM. | ISSUE 2-12-36 | A.E. | TITLE: SHOCKPROOF DENTAL "X" SUPPORT ARM SCREW - LONG |
| KIND | C.R. STEEL | CHANGED | | |
| SHAPE | | " | | |
| FINISH | CHROME #2 | " | | |
| TEMP. | | " | | |
| PATT. | | " | | |

H. G. FISCHER & CO.
2335 WABANSIA AVE.
CHICAGO, ILL.

CAT. NO.

PART NO. 9614

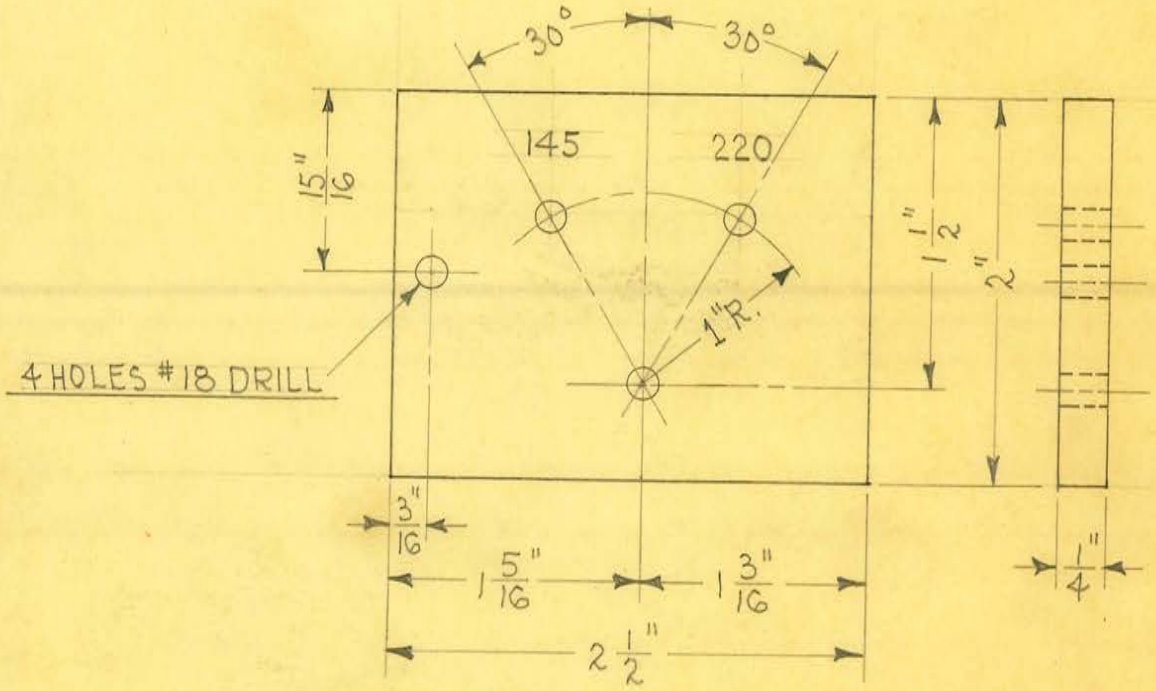


1 REQUIRED

OBSOLETE

| | | | |
|---|---|---|---|
| SIZE | 1/4" SHEET | ISSUE 4-7-36 | 2.8. |
| KIND | BAKELITE | CHANGED | |
| ~~SHAPE~~ | (RICHELAIN) | " | |
| FINISH | | " | |
| TEMP. | | " | |
| PATT. | | " | |

**TITLE:** SHOCKPROOF DENTAL "X" VOLTAGE CHANGE TERMINAL BOARD (FOR SWITZERLAND)

H. G. FISCHER & CO.
2335 WABANSIA AVE.
CHICAGO, ILL.

CAT. NO.

PART NO. 9616

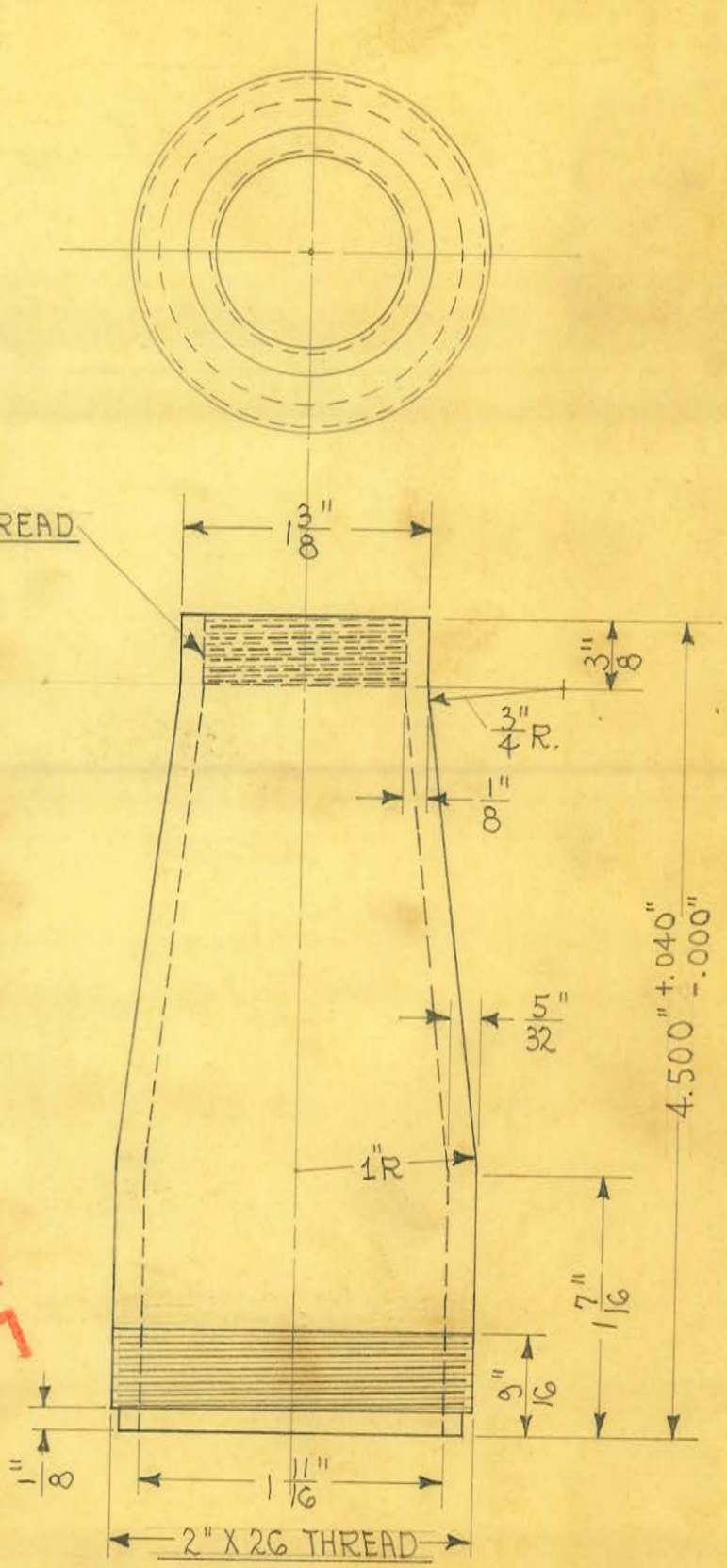


OBSOLETE

| | | | |
|---|---|---|---|
| SIZE | | ISSUE 4-20-36 | H.E. |
| KIND | MOLDED BAKELITE | CHANGED | |
| ~~SHAPE~~ | MOLD # 1760 | " | |
| FINISH | | " | |
| TEMP. | | " | |
| PATT. | | " | |

**TITLE:** SHOCKPROOF "DENTAL" X" TUBE HEAD H.T. CABLE INSULATOR

H. G. FISCHER & CO.
2335 WABANSIA AVE.
CHICAGO, ILL.

CAT. NO.

PART NO. 9617

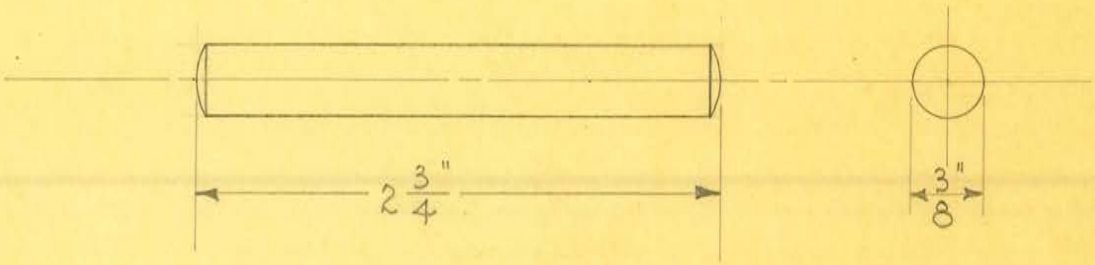


2 REQUIRED

OBSOLETE

| | | | |
|---|---|---|---|
| SIZE | 3/8" DIAM. | ISSUE 6-30-36 | H.E. |
| KIND | C.R. STEEL | CHANGED | |
| SHAPE | | " | |
| FINISH | CAD. # 23 | " | |
| TEMP. | | " | |
| PATT. | | " | |

**TITLE:** SHOCKPROOF DENTAL "X" BASE ROLLER SHAFT

H. G. FISCHER & CO.
2335 WABANSIA AVE.
CHICAGO, ILL.

CAT. NO.

PART NO. 9618

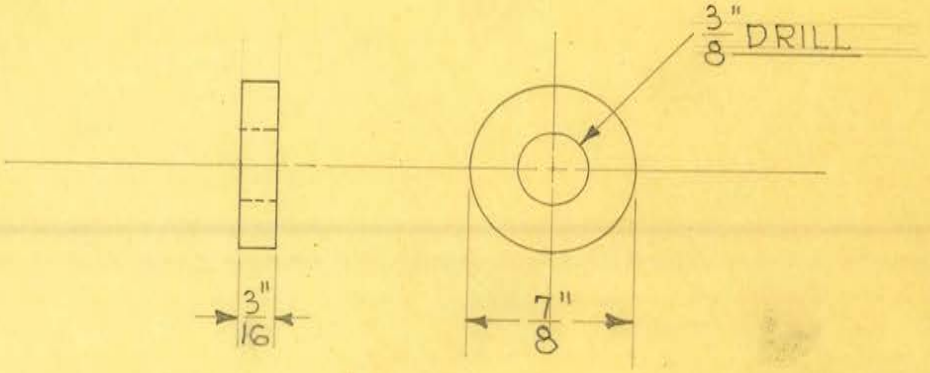


2 REQUIRED

OBSOLETE

| | | | |
|---|---|---|---|
| SIZE | 7/8" DIAM. | ISSUE 6-30-36 | A.E. |
| KIND | C.R. STEEL | CHANGED | |
| SHAPE | | " | |
| FINISH | | " | |
| TEMP. | | " | |
| PATT. | | " | |

**TITLE:** SHOCKPROOF DENTAL "X" BASE ROLLER SPACER

H. G. FISCHER & CO.
2335 WABANSIA AVE.
CHICAGO, ILL.

CAT. NO.

PART NO. 9619

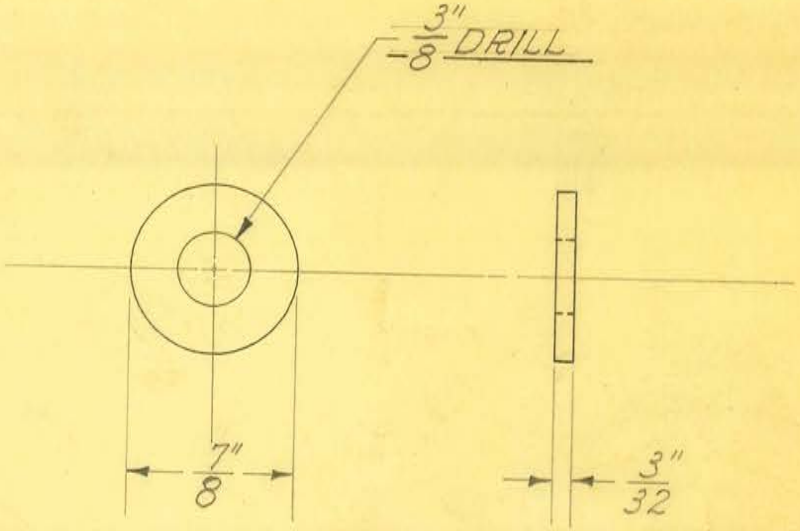


2 REQUIRED

OBSOLETE

| | | | | |
|---|---|---|---|---|
| SIZE | 7/8" DIAM. | ISSUE 4-14-38 | J.W. | TITLE: SHOCKPROOF DENTAL "X" BASE ROLLER SPACER – THIN |
| KIND | C.R. STEEL | CHANGED | | |
| SHAPE | | " | | |
| FINISH | | " | | |
| TEMP. | | " | | |
| PATT. | | " | | |

H. G. FISCHER & CO.
2335 WABANSIA AVE.
CHICAGO, ILL.

CAT. NO.

PART NO. 9619 1/2

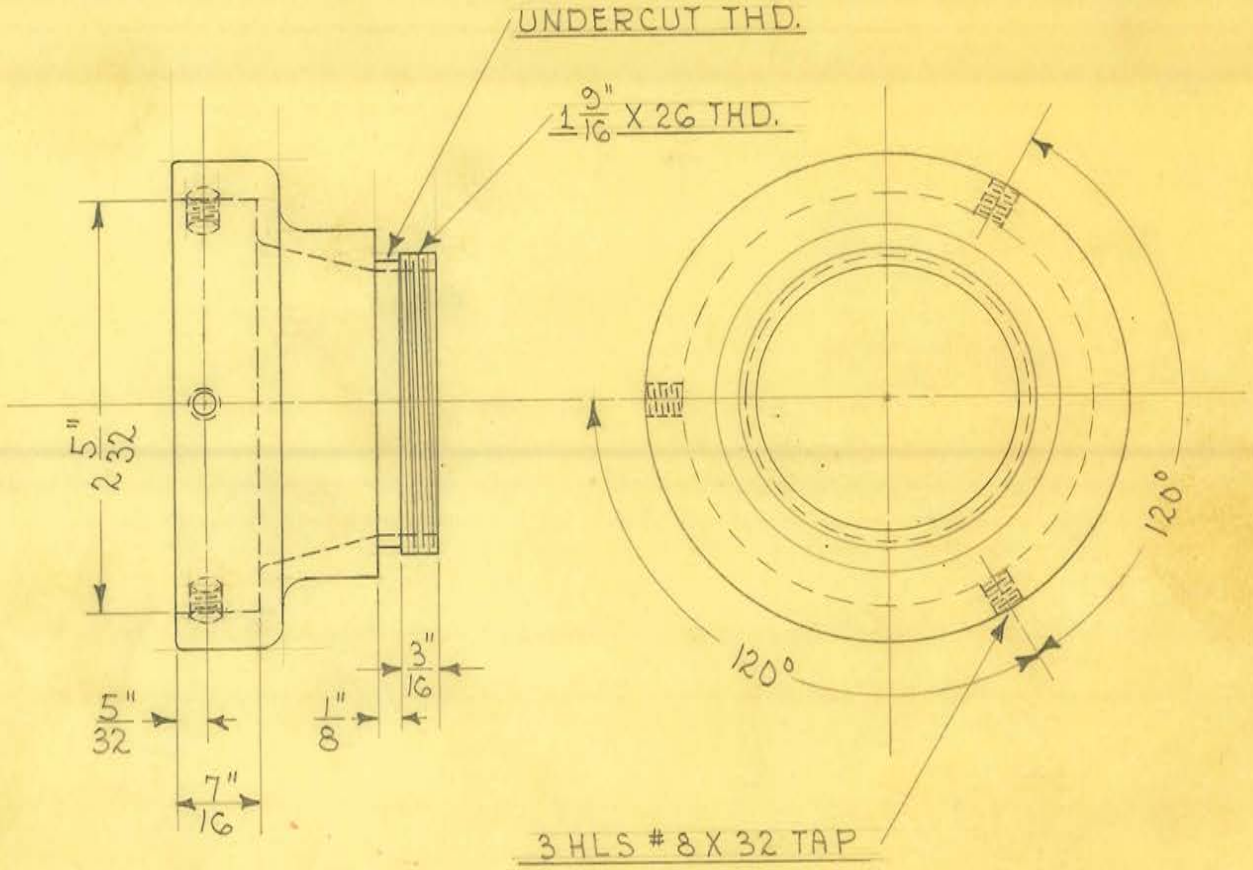


OBSOLETE

| | | | |
|---|---|---|---|
| SIZE | | ISSUE 11-20-36 | A E |
| KIND | ALUM. CASTING | CHANGED | |
| SHAPE | | " | |
| FINISH | POL. & BUFF | " | |
| TEMP. | | " | |
| PATT. | 3157-971 | " | |

**TITLE:** SHOCKPROOF DENTAL "X" LEAD LINED COMPRESSION CONE ADAPTER

H. G. FISCHER & CO.
2335 WABANSIA AVE.
CHICAGO, ILL.

CAT. NO. 3873

PART NO. 9621F

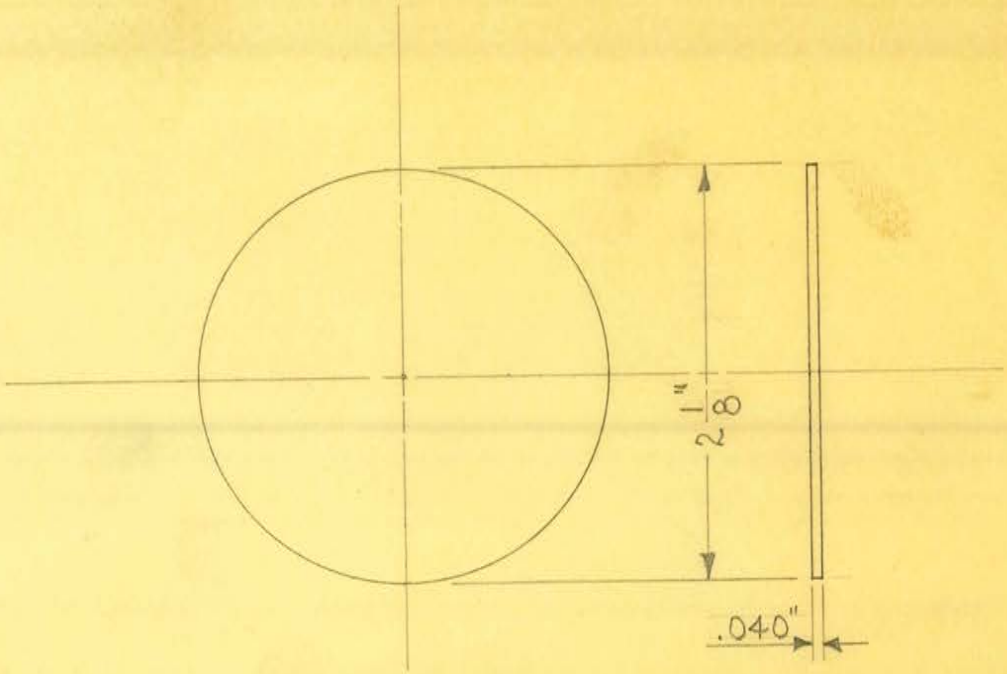


1 REQUIRED

OBSOLETE

| | | | |
|---|---|---|---|
| SIZE | .040" SHEET | ISSUE 11-24-36 | A.E. |
| KIND | ALUMINUM | CHANGED | |
| SHAPE | | " | |
| FINISH | | " | |
| TEMP. | | " | |
| PATT. | | " | |

**TITLE:** SHOCKPROOF DENTAL "X" LEAD LINED COMPRESSION CONE FILTER

H. G. FISCHER & CO.
2335 WABANSIA AVE.
CHICAGO, ILL.

CAT. NO.

PART NO. 9622

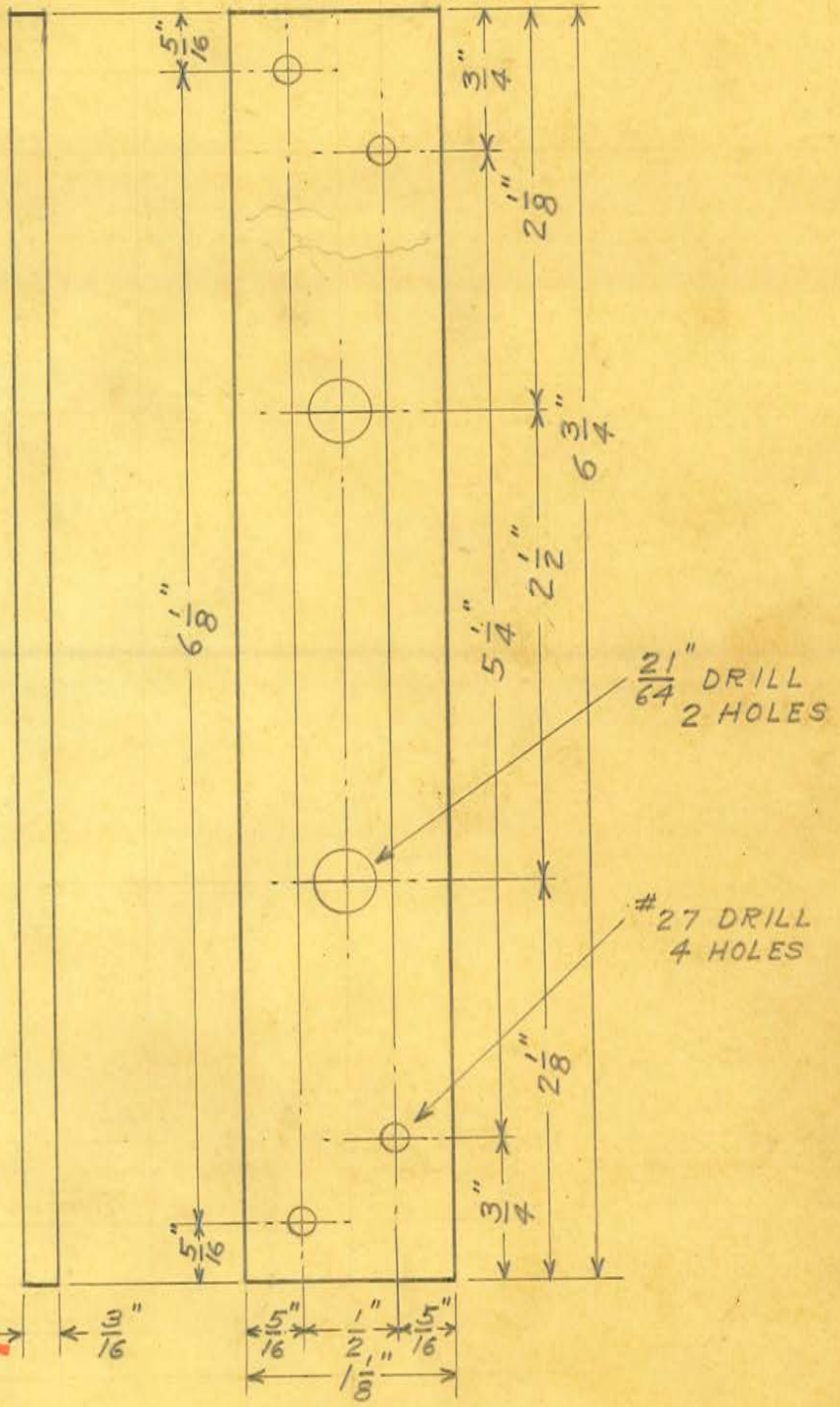


OBSOLETE

JD

| | | | |
|---|---|---|---|
| SIZE | 6 3/4" X 1 1/8" X 3/16" | ISSUE 8-2-35 | W.J.W. |
| KIND | ALSIMAG 35 | CHANGED | |
| SHAPE | | " | |
| FINISH | | " | |
| TEMP. | | " | |
| PATT. | | " | |

**TITLE:** FISCHER "USWG" PORT. ULTRA SHORT WAVE GEN. CORD SOCKET MTG. BOARD - DRILLED

H. G. FISCHER & CO.
2335 WABANSIA AVE.
CHICAGO, ILL.

CAT. NO.

PART NO. 9636A

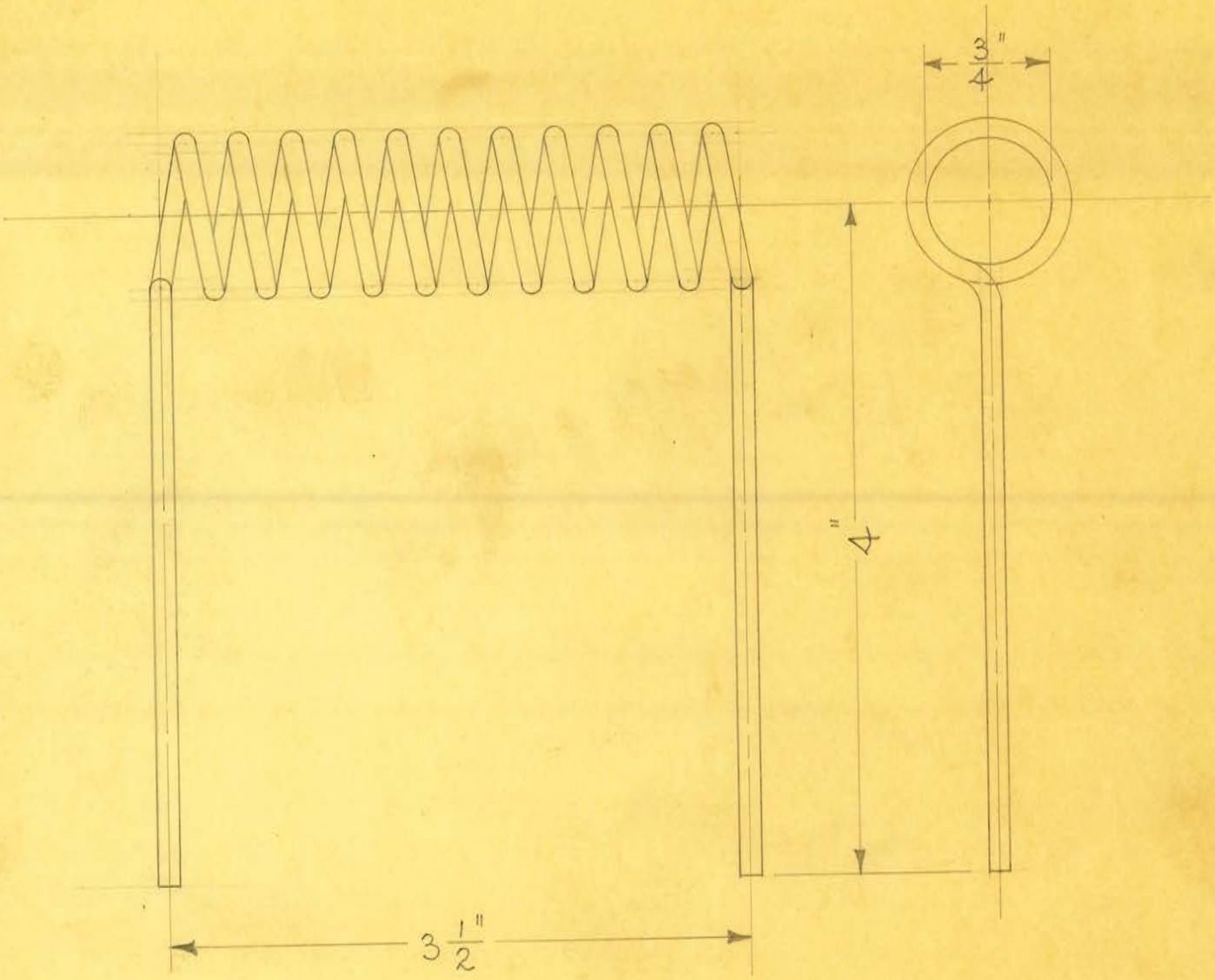


OBSOLETE

11 TURNS
1 REQUIRED

| | | | |
|---|---|---|---|
| SIZE | #10 TINNED | ISSUE 9-10-36 | A.E. |
| KIND | COPPER WIRE | CHANGED | |
| SHAPE | | " | |
| FINISH | | " | |
| TEMP. | | " | |
| PATT. | | " | |

**TITLE:** FISCHER "USW-6" PORT. ULTRA SHORT WAVE GEN. PICKUP COIL

H. G. FISCHER & CO.
2338 WABANSIA AVE.
CHICAGO, ILL.

CAT. NO.

PART NO. 9638A

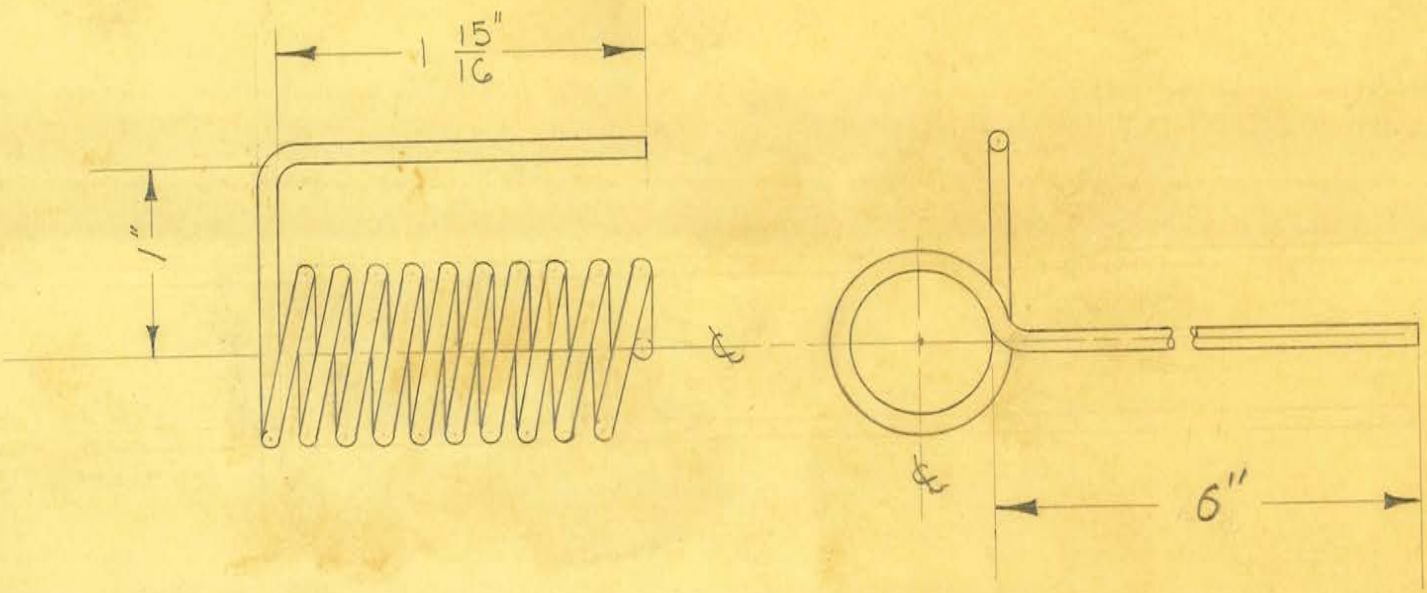


10 TURNS WOUND
OVER #4781 MANDRILL

1 REQUIRED

OBSOLETE

| | | | | |
|---|---|---|---|---|
| SIZE | #10 TINNED | ISSUE 9-18-35 | J.W. | TITLE: FISCHER "USWG" PORT. ULTRA SHORT WAVE GEN. TUNING COIL - RIGHT |
| KIND | COPPER WIRE | CHANGED | | |
| SHAPE | | " 1-12-38 | J.W. | |
| FINISH | | " | | |
| TEMP. | | " | | |
| PATT. | | " | | |

H. G. FISCHER & CO.
2335 WABANSIA AVE.
CHICAGO, ILL.

CAT. NO.

PART NO. 9639A

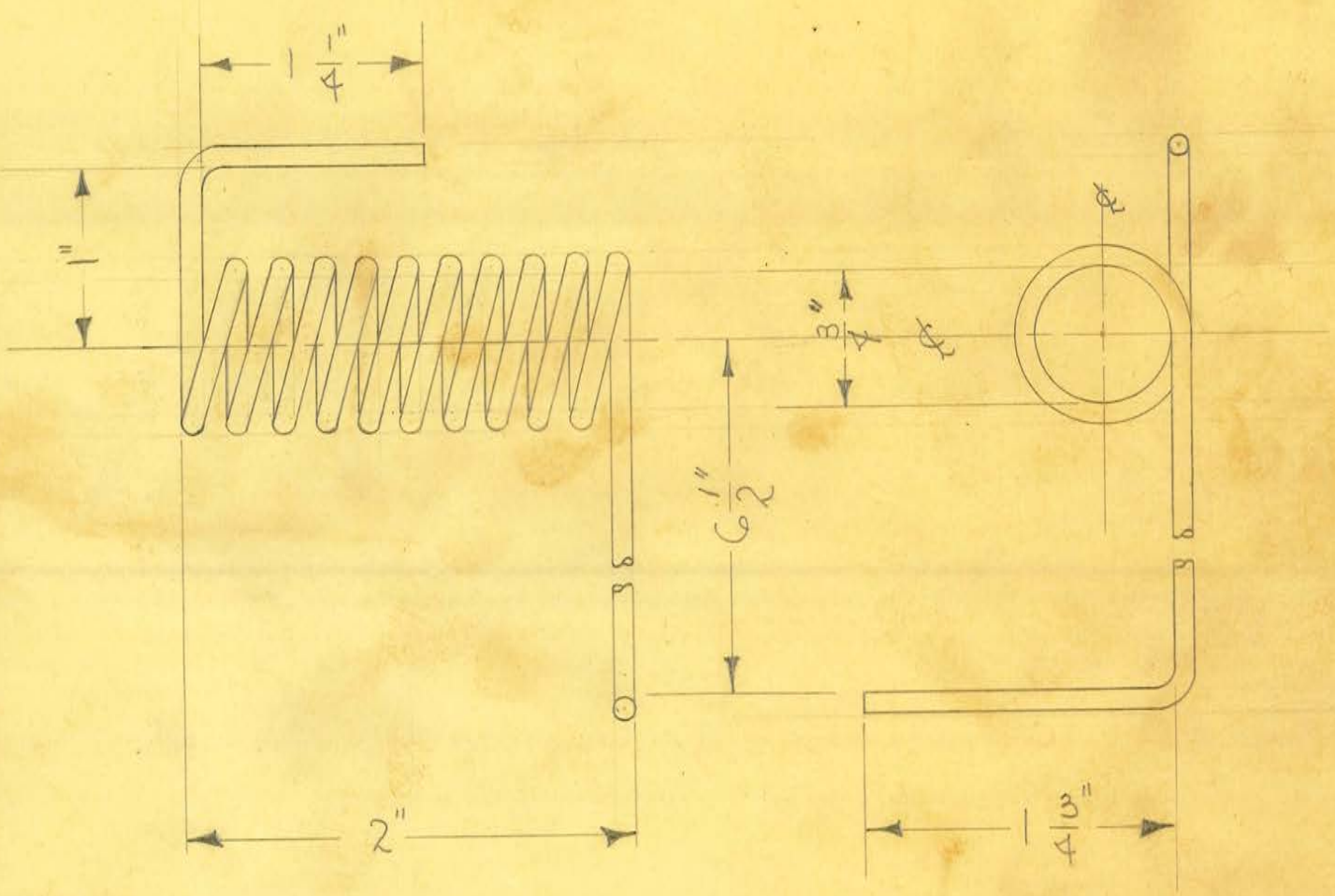


10 TURNS WOUND
OVER #4781 MANDRILL

OBSOLETE

1 REQUIRED

| | | | | |
|---|---|---|---|---|
| SIZE | #10 TINNED | ISSUE 9-16-35 | J.W. | TITLE: FISCHER "USWG" PORT. ULTRA SHORT WAVE GEN. TUNING COIL - LEFT |
| KIND | COPPER WIRE | CHANGED | | |
| SHAPE | | " | | |
| FINISH | | " | | |
| TEMP. | | " | | |
| PATT. | | " | | |

H. G. FISCHER & CO.
2335 WABANSIA AVE.
CHICAGO, ILL.

CAT. NO.

PART NO. 9639 1/2

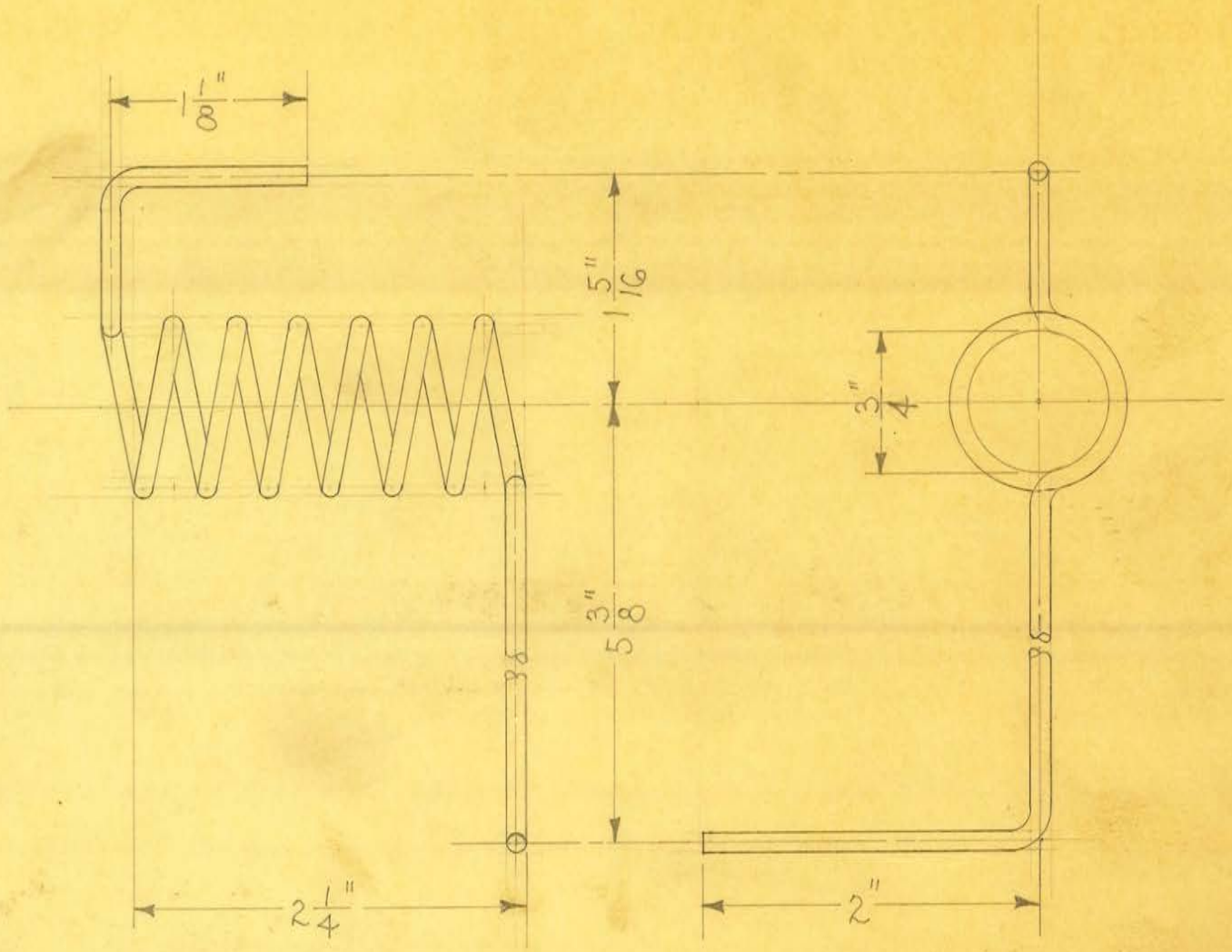


6½ TURNS WOUND ON
#4781 MANDREL

1 REQUIRED

OBSOLETE

| | | | |
|---|---|---|---|
| SIZE | #10 TINNED | ISSUE 9-10-36 | H.E. |
| KIND | COPPER WIRE | CHANGED | |
| SHAPE | | " | |
| FINISH | | " | |
| TEMP. | | " | |
| PATT. | | " | |

**TITLE:** FISCHER "USWG" PORT. ULTRA SHORT WAVE GEN. TUNING COIL - LEFT

H. G. FISCHER & CO.
2335 WABANSIA AVE.
CHICAGO, ILL.

CAT. NO.

PART NO. 9639½A

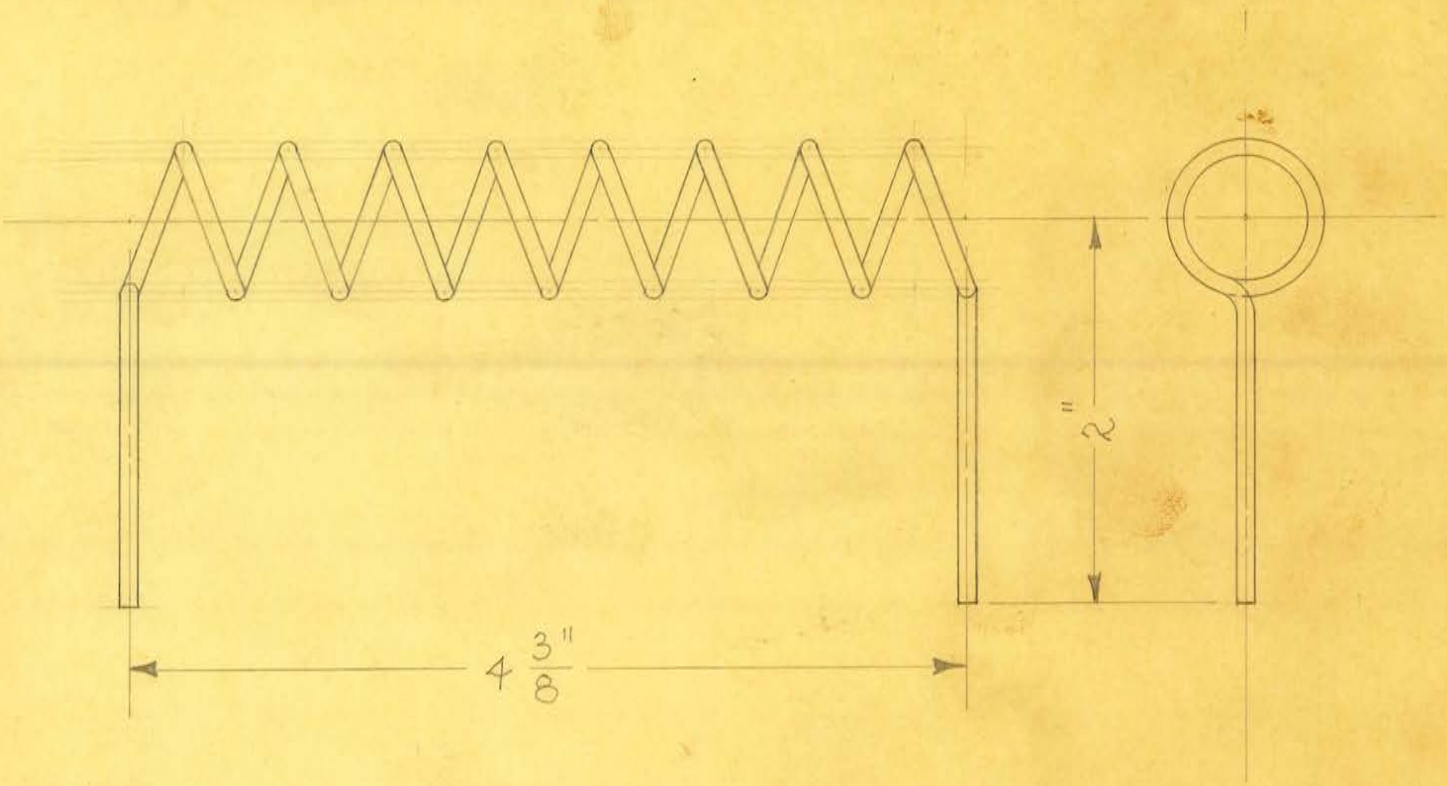


8 TURNS

1 REQUIRED

WIND ON A 5/8" MANDREL

OBSOLETE

Obsolete

| | | | |
|---|---|---|---|
| SIZE | #12 TINNED | ISSUE 9-10-36 | A.E. |
| KIND | COPPER WIRE | CHANGED | |
| SHAPE | | " | |
| FINISH | | " | |
| TEMP. | | " | |
| PATT. | | " | |

**TITLE:** FISCHER "USW-G" PORT. ULTRA SHORT WAVE GEN. GRID COIL

H. G. FISCHER & CO.
2335 WABANSIA AVE.
CHICAGO, ILL.

CAT. NO.

PART NO. 9640A

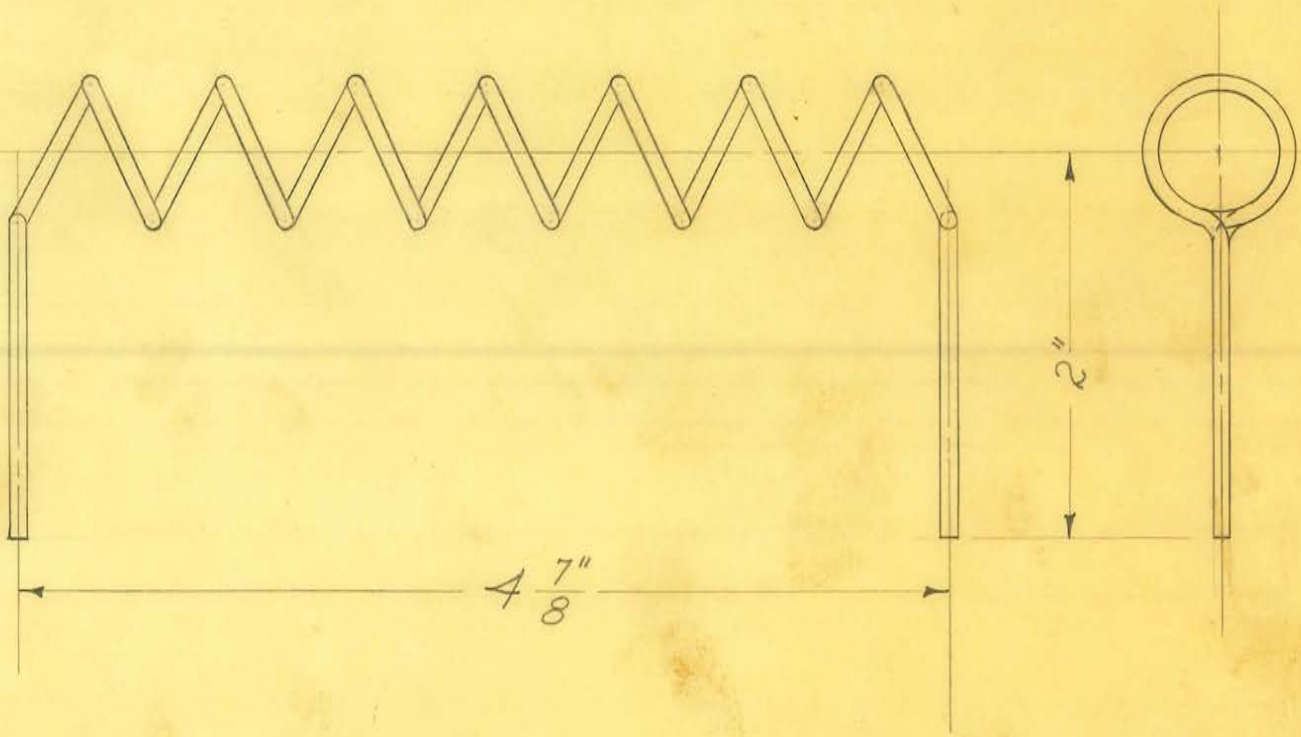


7 TURNS
WIND ON 5/8" MANDREL

1 REQUIRED

OBSOLETE

| | | | | |
|---|---|---|---|---|
| SIZE | #12 TINNED | ISSUE 3-25-37 | J.W. | **TITLE:** FISCHER "USW-6" PORT. ULTRA SHORT WAVE GEN. - GRID COIL |
| KIND | COPPER WIRE | CHANGED | | |
| SHAPE | | " | | |
| FINISH | | " | | |
| TEMP. | | " | | |
| PATT. | | " | | |

H. G. FISCHER & CO.
2335 WABANSIA AVE.
CHICAGO, ILL.

CAT. NO.

PART NO. 9640B

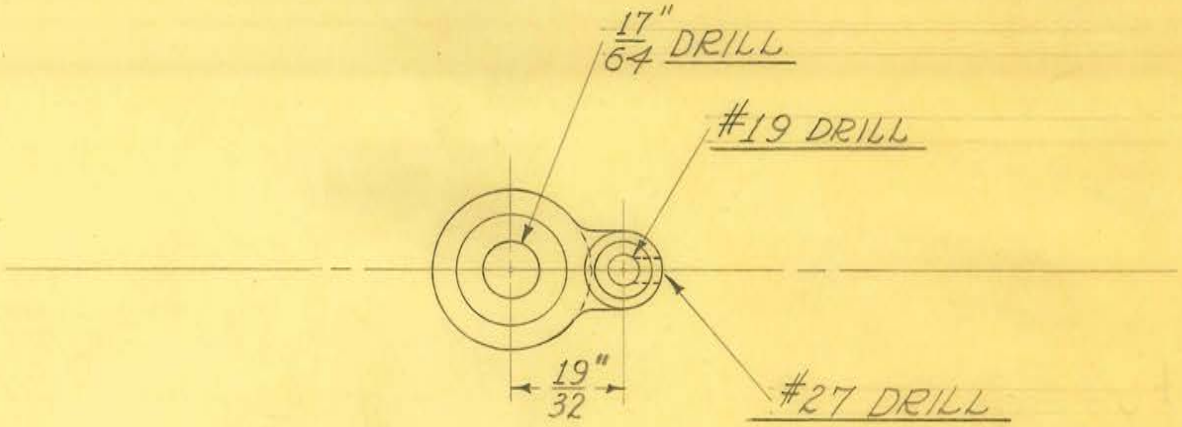


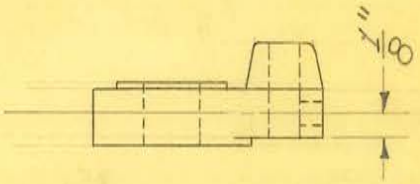


2 REQUIRED

OBSOLETE

| | | | |
|---|---|---|---|
| SIZE | | ISSUE 3-24-37 | J.W. |
| KIND | BRASS CASTING | CHANGED | |
| SHAPE | | " | |
| FINISH | CAD. #23 | " | |
| TEMP. | | " | |
| PATT. | 2637-885 | " | |

**TITLE:** FISCHER "USW-6" PORT. ULTRA SHORT WAVE GEN. PLATE COIL & TUBE CONN.

H. G. FISCHER & CO.
2335 WABANSIA AVE.
CHICAGO, ILL.

CAT. NO.

PART NO. 9643

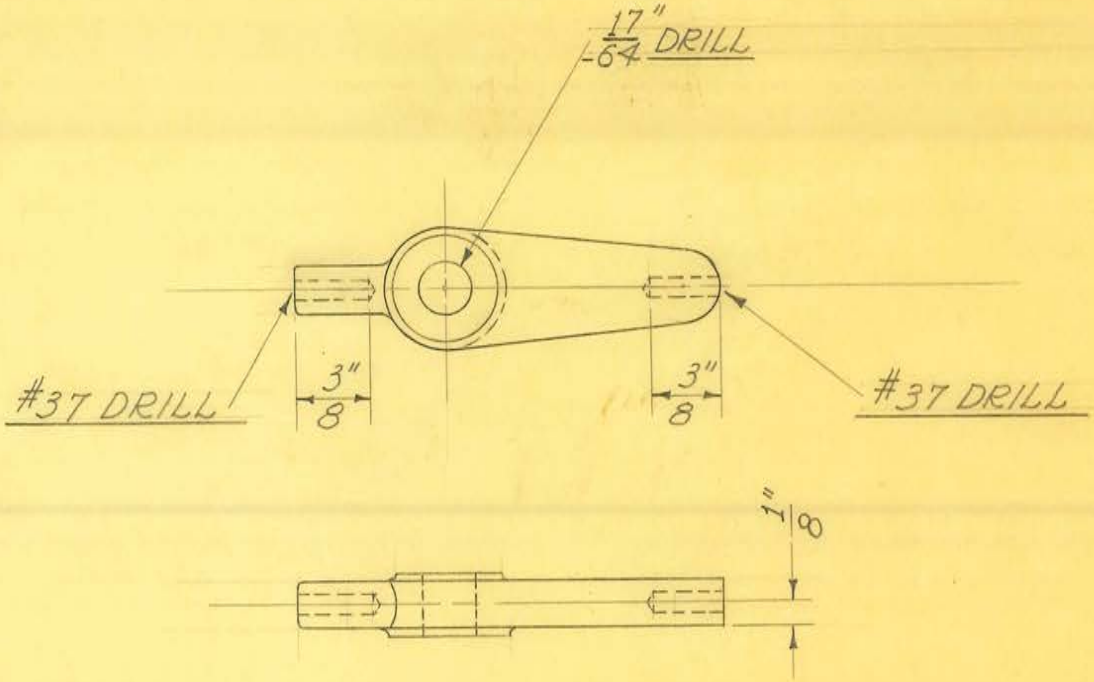


2 REQUIRED

OBSOLETE

| | | | | |
|---|---|---|---|---|
| SIZE | | ISSUE 3-24-37 | J.W. | TITLE: FISCHER "USW-6" PORT. ULTRA SHORT WAVE GEN. — PICKUP & PATIENT'S TUNING COIL CONN. |
| KIND | BRASS CASTING | CHANGED | | |
| SHAPE | | " | | |
| FINISH | CAD. #23 | " | | |
| TEMP. | | " | | |
| PATT. | 5879-933 | " | | |

H. G. FISCHER & CO.
2335 WABANSIA AVE.
CHICAGO, ILL.

CAT. NO.

PART NO. 9644

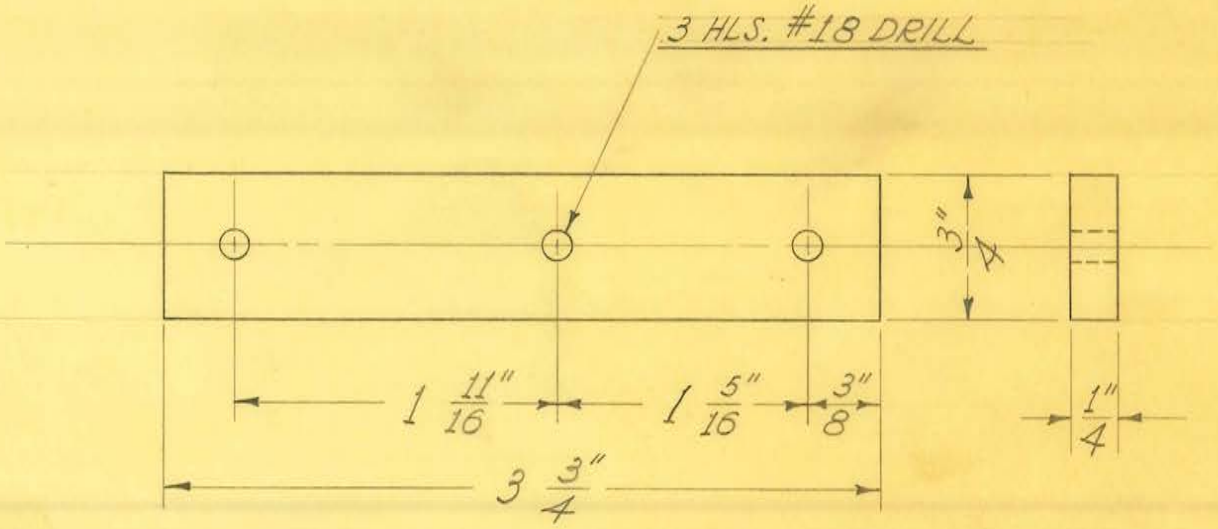


2 REQUIRED

OBSOLETE

| | | | |
|---|---|---|---|
| SIZE | 1/4" SHEET | ISSUE 3-24-31 | J.W. |
| KIND | BAKELITE | CHANGED | |
| SHAPE | | " | |
| FINISH | | " | |
| TEMP. | | " | |
| PATT. | | " | |

**TITLE:** FISCHER "USW-6" PORT. ULTRA SHORT WAVE GEN.- RECT. TUBE GRID CONN. POST SUPP. STRIP

H. G. FISCHER & CO.
2335 WABANSIA AVE.
CHICAGO, ILL.

CAT. NO.

PART NO. 9645

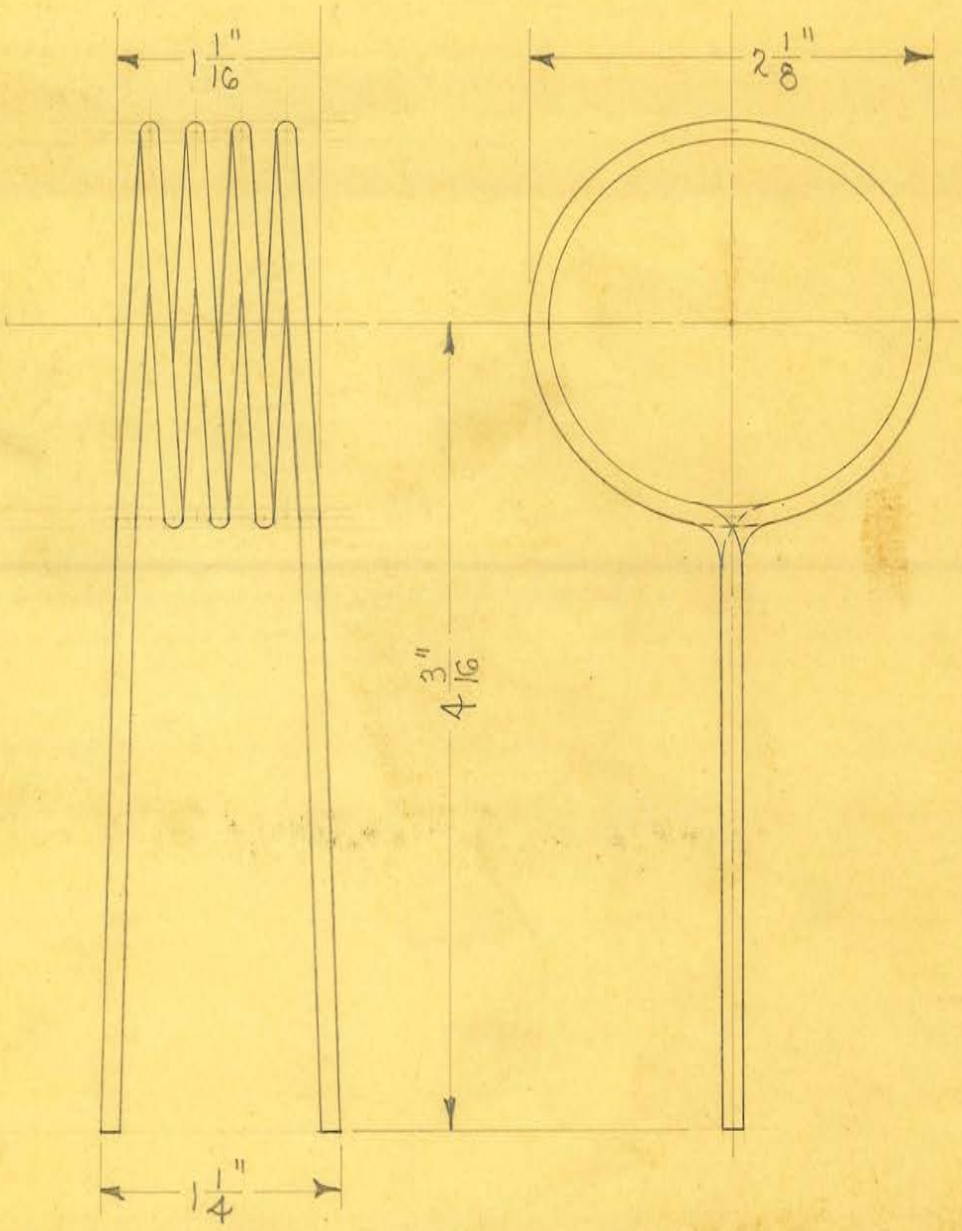


4 TURNS
2 REQUIRED

OBSOLETE

| | | | |
|---|---|---|---|
| SIZE | #10 TINNED | ISSUE 7-18-35 | A.E. |
| KIND | COPPER WIRE | CHANGED | |
| SHAPE | | " | |
| FINISH | | " | |
| TEMP. | | " | |
| PATT. | | " | |

**TITLE:** FISCHER "SW12" PORT. SHORT WAVE H.F. OUTFIT
TUNING COIL

H. G. FISCHER & CO.
2335 WABANSIA AVE.
CHICAGO, ILL.

CAT. NO.

PART NO. 9653

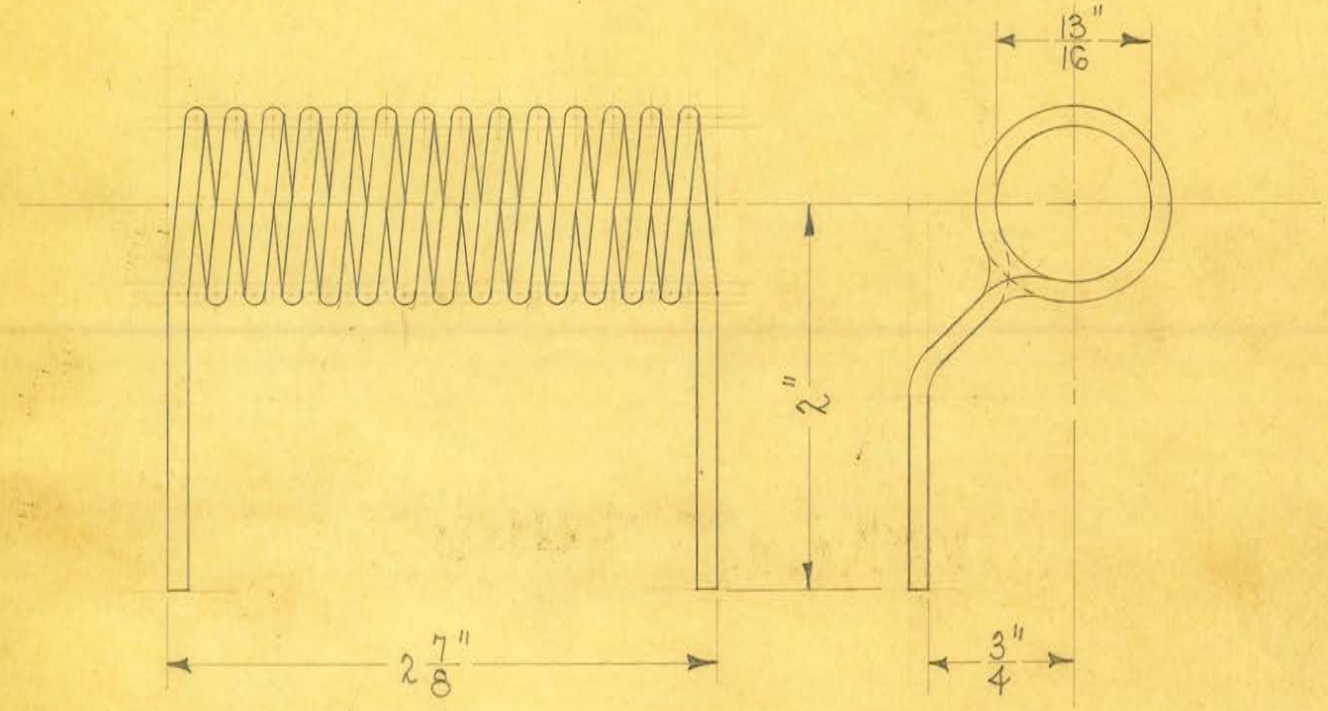


14 TURNS
1 REQUIRED

OBSOLETE

| | | | |
|---|---|---|---|
| SIZE | #10 TINNED | ISSUE 7-18-35 | J.E. |
| KIND | COPPER WIRE | CHANGED | |
| SHAPE | | " | |
| FINISH | | " | |
| TEMP. | | " | |
| PATT. | | " | |

**TITLE:** FISCHER "SW12" PORT. SHORT WAVE H.F. OUTFIT
GRID COIL

H. G. FISCHER & CO.
2335 WABANSIA AVE.
CHICAGO, ILL.

CAT. NO.

PART NO. 9654

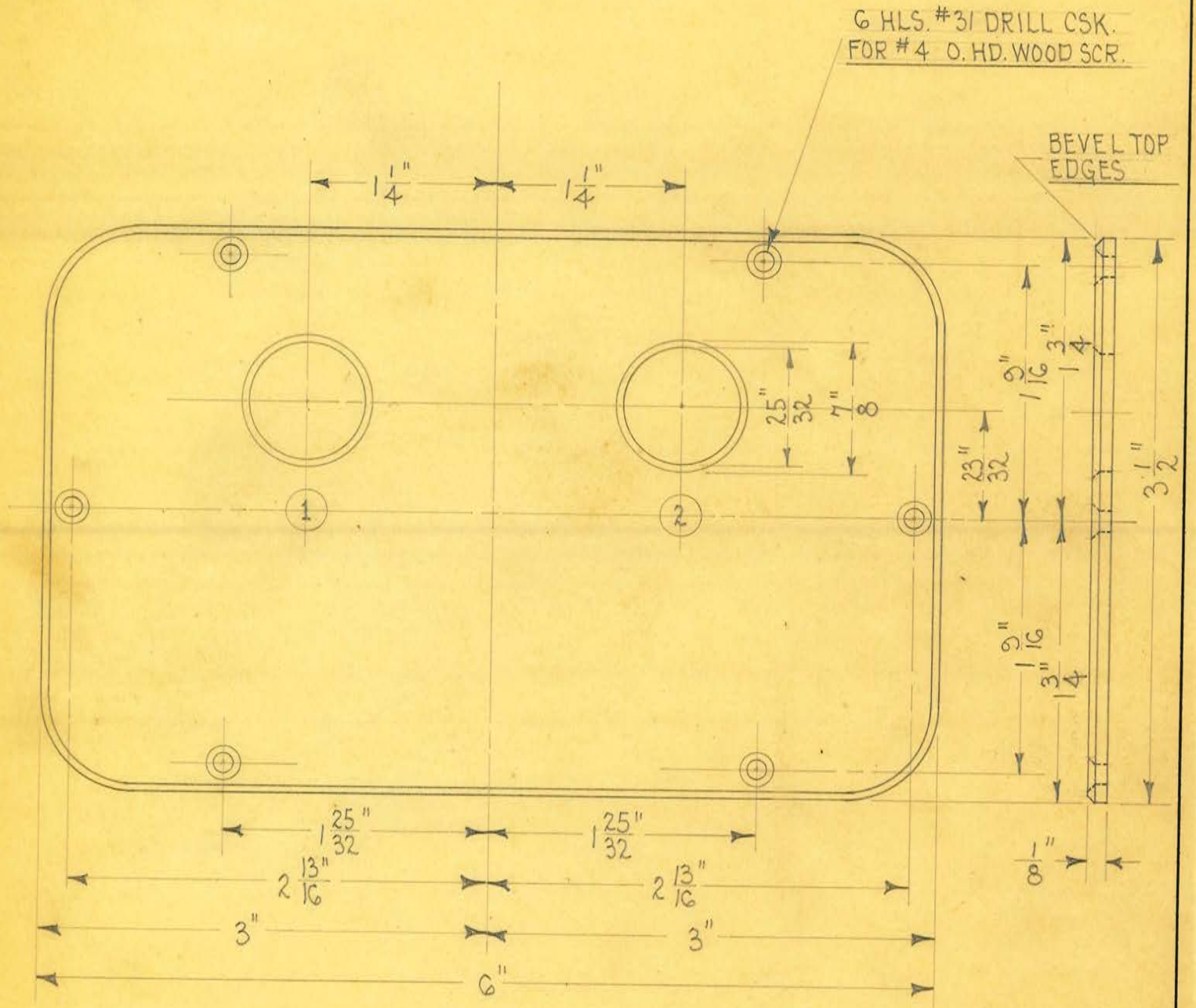


1 REQUIRED

OBSOLETE

| | | | |
|---|---|---|---|
| SIZE | 1/8" SHEET | ISSUE 7-29-35 | A.E. |
| KIND | LAMICOID | CHANGED | |
| SHAPE | | " | |
| FINISH | | " | |
| TEMP. | | " | |
| PATT. | | " | |

**TITLE:** FISCHER "USWG" PORT. ULTRA SHORT WAVE GEN. PATIENT'S OUTLET PLATE

H. G. FISCHER & CO.
2335 WABANSIA AVE.
CHICAGO, ILL.

CAT. NO.

PART NO. 9660

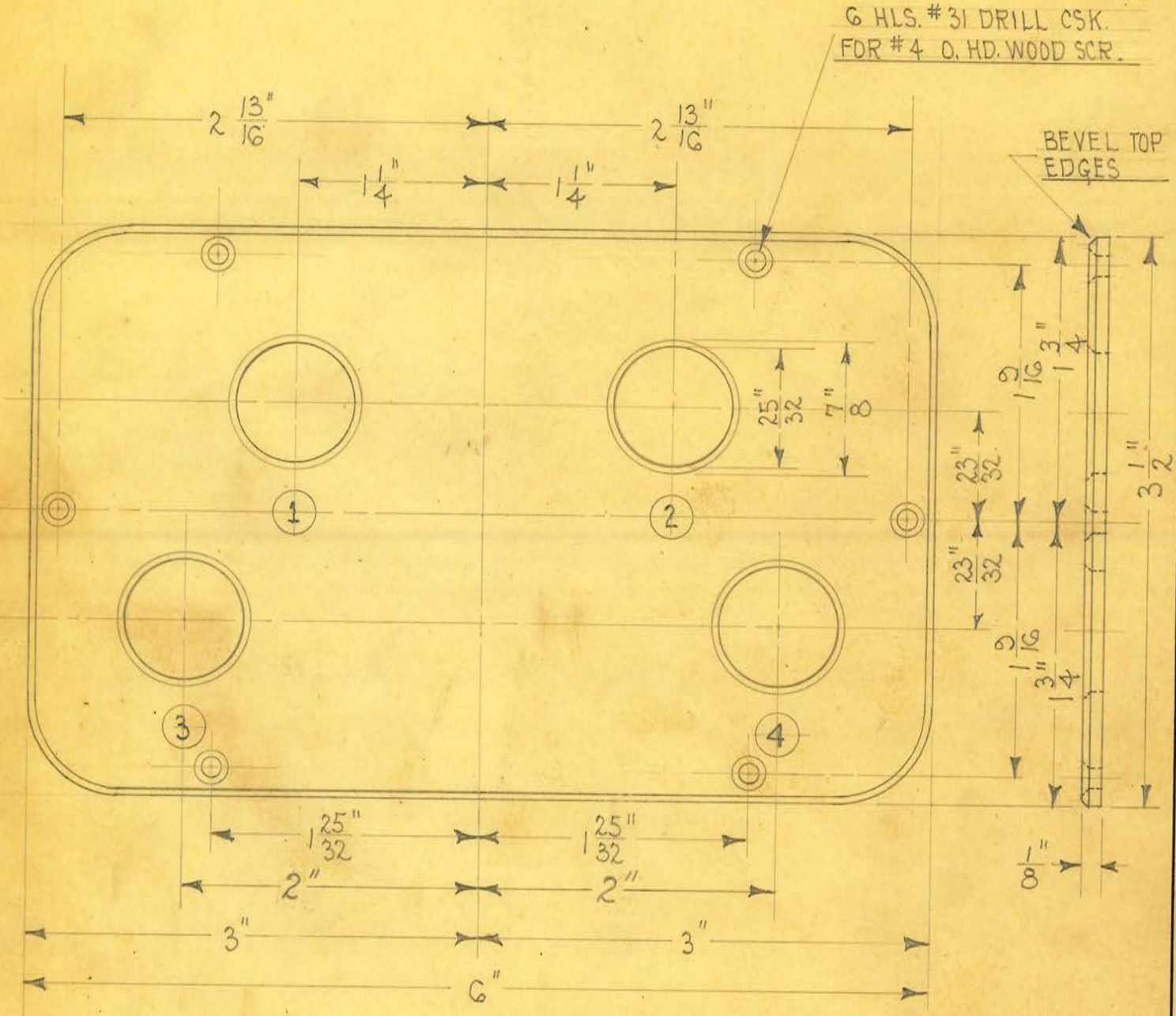


1 REQUIRED

OBSOLETE

| | | | |
|---|---|---|---|
| SIZE | 1/8" SHEET | ISSUE 7-29-35 | A.E. |
| KIND | LAMICOID | CHANGED 12-30-35 | J.W. |
| SHAPE | | " | |
| FINISH | | " | |
| TEMP. | | " | |
| PATT. | | " | |

**TITLE:** FISCHER "SW12" PORT. SHORT WAVE H.F. OUTFIT
PATIENT'S OUTLET PLATE

H. G. FISCHER & CO.
2335 WABANSIA AVE.
CHICAGO, ILL.

CAT. NO.

PART NO. 9661

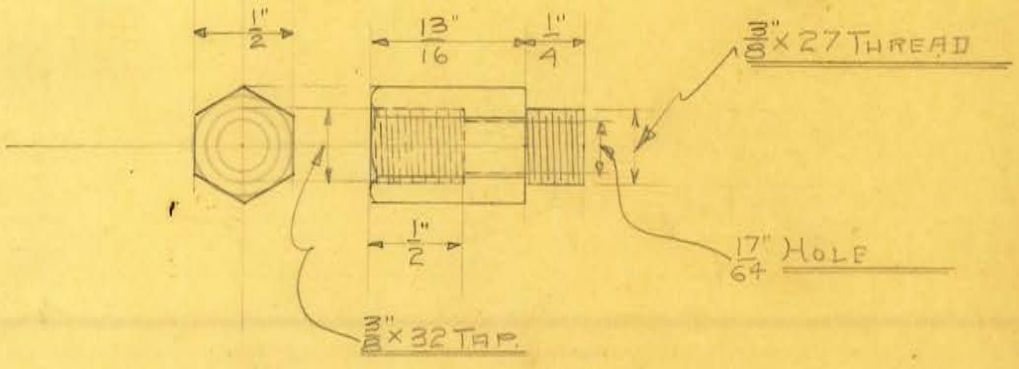


OBSOLETE

| | | | |
|---|---|---|---|
| SIZE | 1/2" | ISSUE 11-23-35 | |
| KIND | HEX. BRASS ROD | CHANGED | |
| SHAPE | | " | |
| FINISH | DIP #7 | " | |
| TEMP. | | " | |
| PATT. | | " | |

**TITLE:** 12 METER PATIENTS TUNING CONDENSER MOUNTING

| | | |
|---|---|---|
| H. G. FISCHER & CO. 2335 WABANSIA AVE. CHICAGO, ILL. | CAT. NO. | PART NO. 9663 |

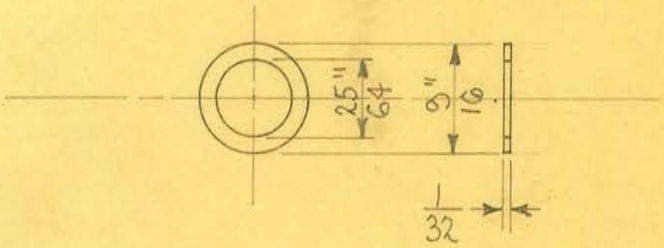


1 REQUIRED

OBSOLETE

OBSOLETE

| | | | |
|---|---|---|---|
| SIZE | 9/16" DIAM. | ISSUE 2-7-36 | A.B. |
| KIND | BRASS ROD | CHANGED | |
| SHAPE | | " | |
| FINISH | | " | |
| TEMP. | | " | |
| PATT. | | " | |

**TITLE:** FISCHER "SW-12" PORT. SHORT WAVE H.F. OUTFIT PATIENT'S TUNING COND. MTG. WASHER

H. G. FISCHER & CO.
2335 WABANSIA AVE.
CHICAGO, ILL.

CAT. NO.

PART NO. 9664

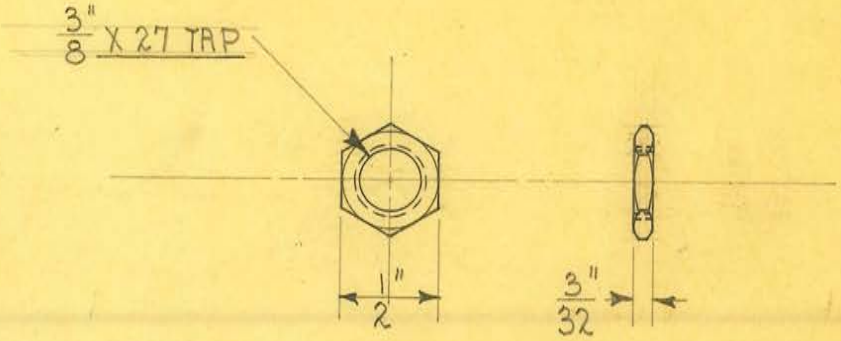


1 REQUIRED

OBSOLETE

| | | | |
|---|---|---|---|
| SIZE | 1/2" HEX. | ISSUE 2-8-36 | H.E. |
| KIND | BRASS ROD | CHANGED | |
| SHAPE | | " | |
| FINISH | CAD. #23 | " | |
| TEMP. | | " | |
| PATT. | | " | |

**TITLE:** FISCHER "SW-12" PORT. SHORT WAVE H.F. OUTFIT PATIENT'S TUNING COND. MTG. NUT

H. G. FISCHER & CO.
2335 WABANSIA AVE.
CHICAGO, ILL.

CAT. NO.

PART NO. 9665

6 2

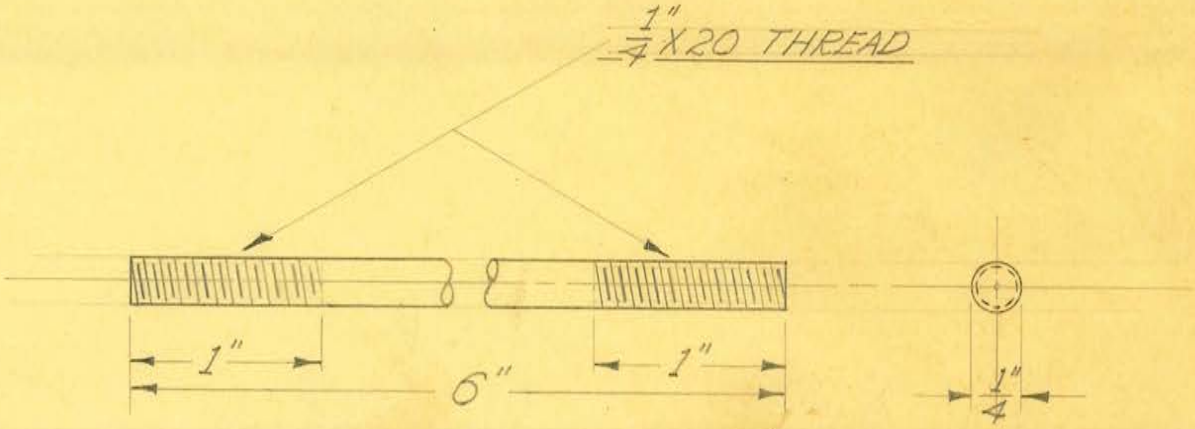


4 REQUIRED

OBSOLETE

| | | | | |
|---|---|---|---|---|
| SIZE | 1/2" DIAM. | ISSUE 10-9-36 | J.W. | |
| KIND | C.R. STEEL | CHANGED | | |
| SHAPE | | " | | |
| FINISH | | " | | |
| TEMP. | | " | | |
| PATT. | | " | | |

**TITLE:** 25 CYCLE "SW-12" PORT. SHORT WAVE TRANSFORMER STUD

H. G. FISCHER & CO.
2335 WABANSIA AVE.
CHICAGO, ILL.

CAT. NO.

PART NO. 9666

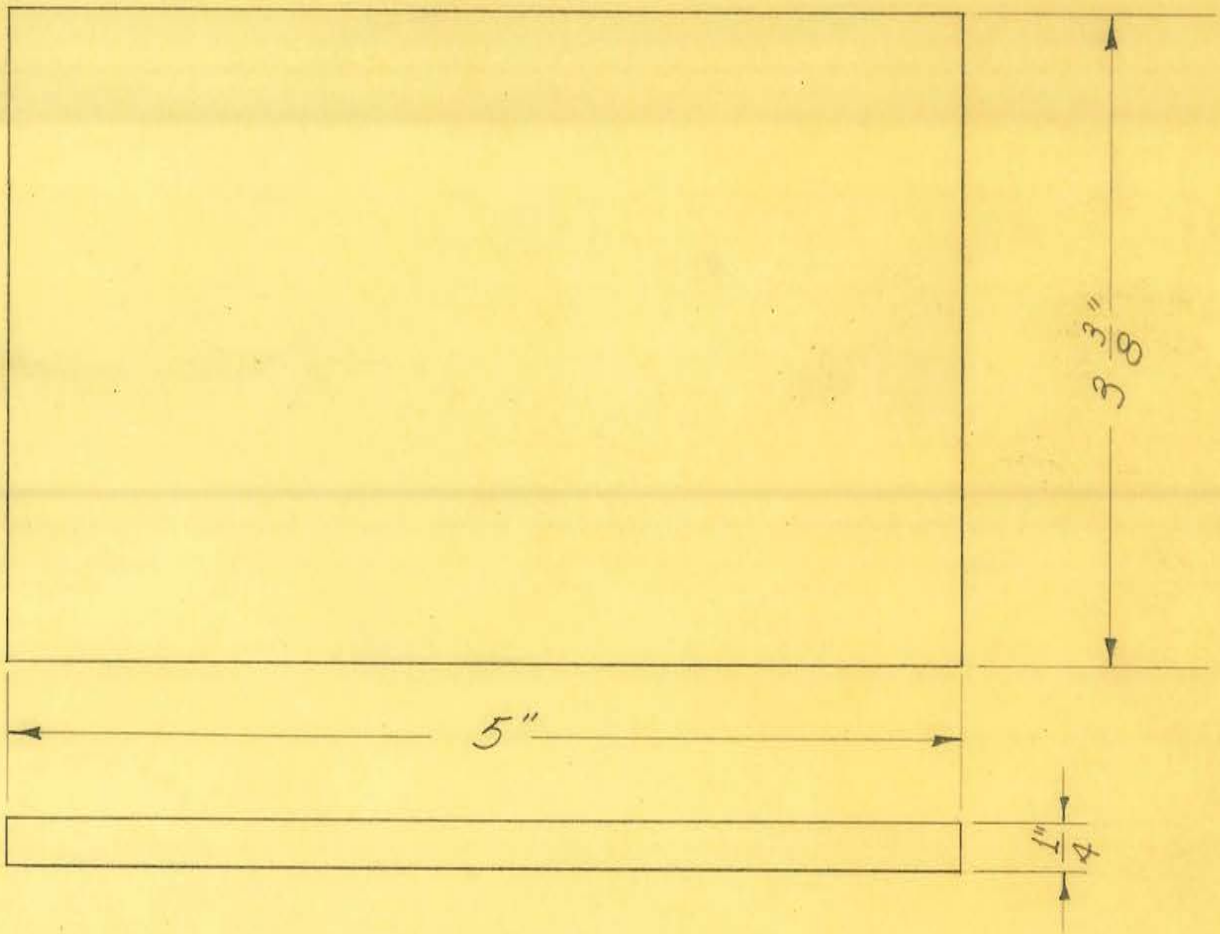


OBSOLETE

| | | | | |
|---|---|---|---|---|
| SIZE | 1/4" SHEET | ISSUE 3-15-37 | J.W. | |
| KIND | PLYWOOD | CHANGED | | |
| SHAPE | | " | | |
| FINISH | BLACK #50 ONE SIDE | " | | |
| TEMP. | | " | | |
| PATT. | | " | | |

**TITLE:** MODEL "C" SHORT WAVE - LINE CORD FOOT SW. RECEPTACLE MTG. BOARD

H. G. FISCHER & CO.
2335 WABANSIA AVE.
CHICAGO, ILL.

CAT. NO.

PART NO. 9674

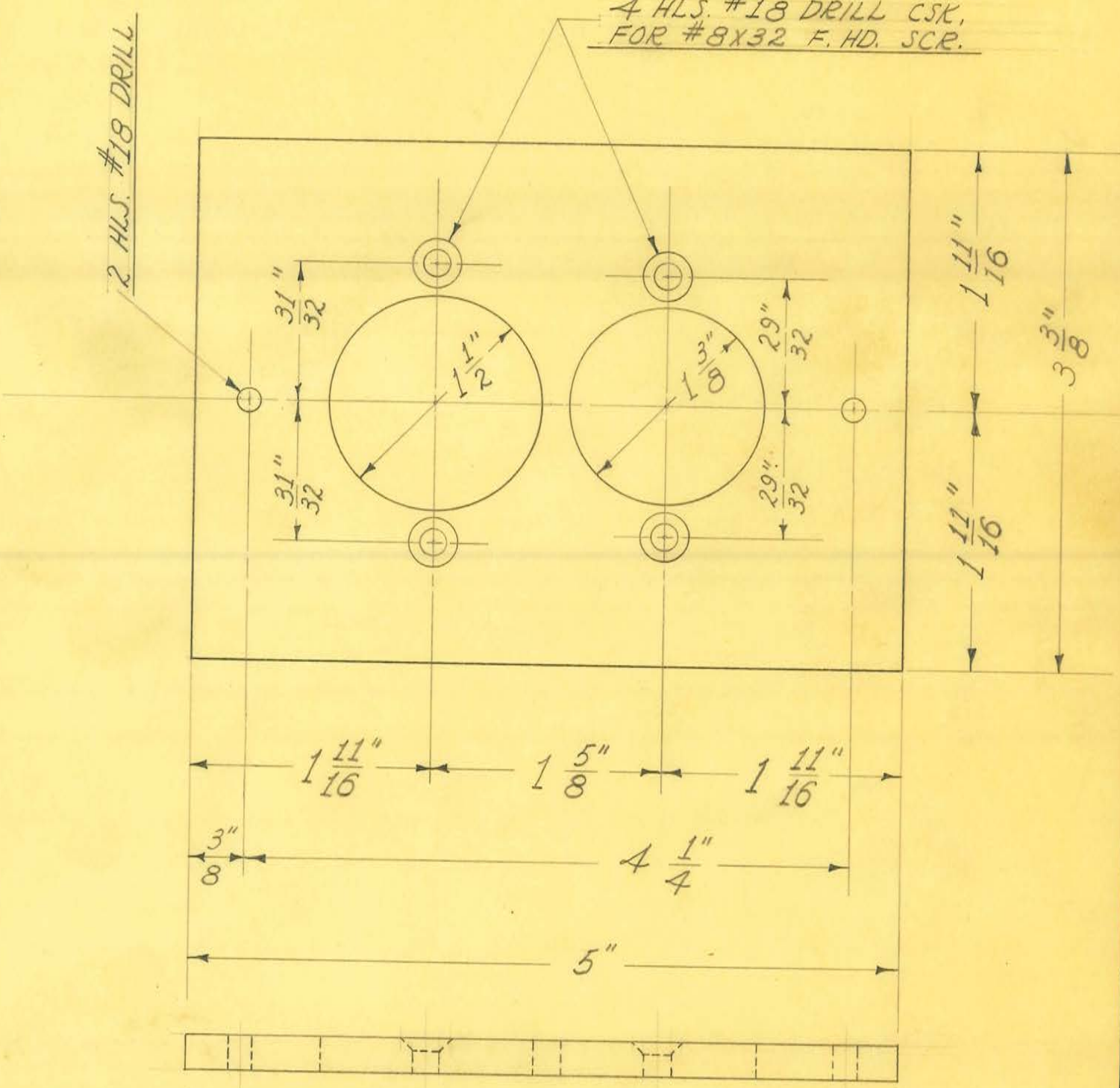


OBSOLETE

1 REQUIRED

| | | | | |
|---|---|---|---|---|
| SIZE | | ISSUE 3-12-37 | J.W. | TITLE: MODEL "C" SHORT WAVE - LINE & FOOT SW. RECEPTACLE MTG. BOARD |
| KIND | | CHANGED | | |
| SHAPE | | " | | |
| FINISH | | " | | |
| TEMP. | | " | | |
| PATT. | | " | | |

H. G. FISCHER & CO.
2335 WABANSIA AVE.
CHICAGO, ILL.

CAT. NO.

PART NO. 9674F

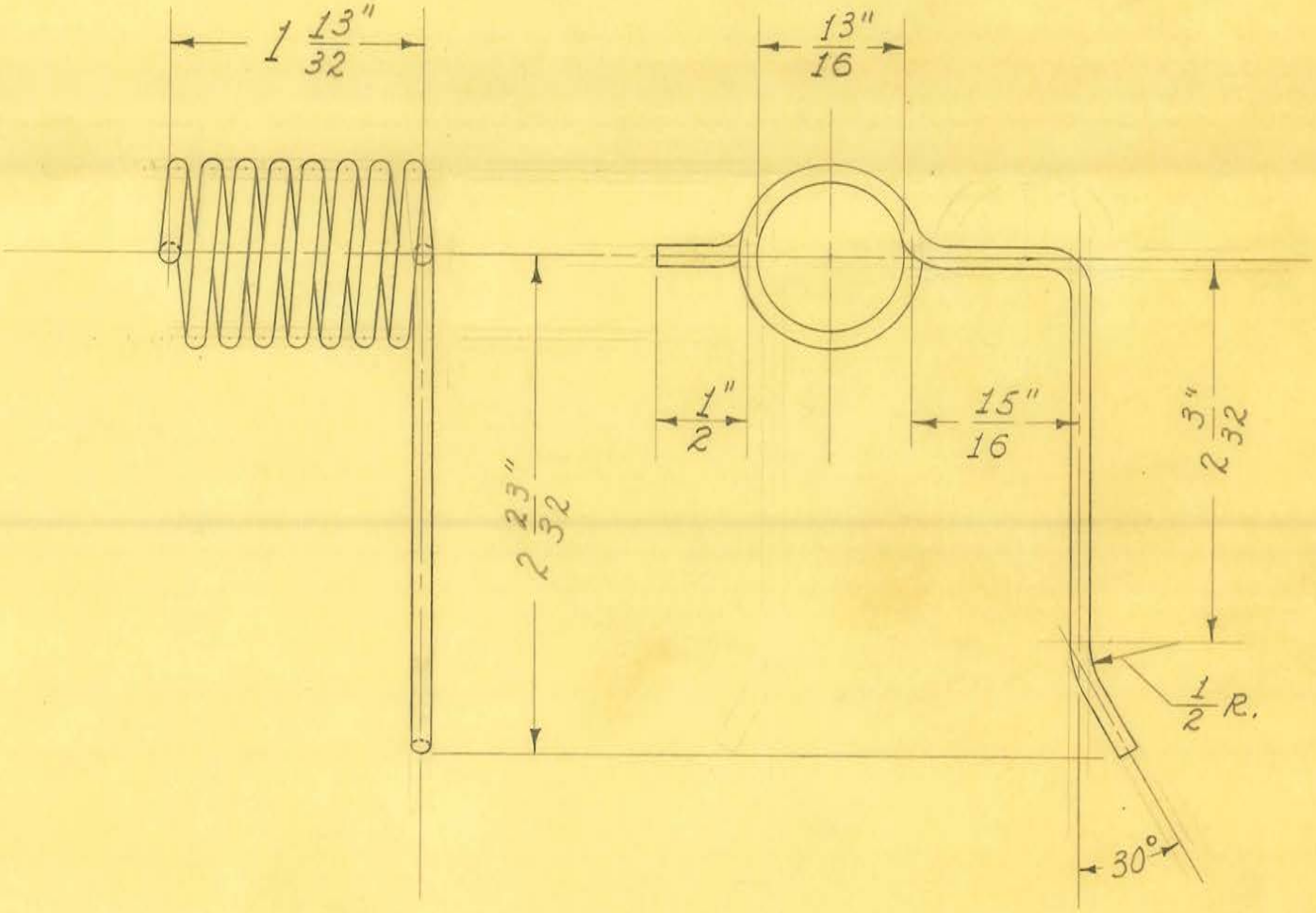


7 1/2 TURNS

1 REQUIRED

OBSOLETE

| | | | | |
|---|---|---|---|---|
| SIZE | #10 TINNED | ISSUE 3-13-37 | J.W. | TITLE: MODEL "C" SHORT WAVE PATIENT'S TUNING COIL - RIGHT |
| KIND | COPPER WIRE | CHANGED | | |
| SHAPE | | " | | |
| FINISH | | " | | |
| TEMP. | | " | | |
| PATT. | | " | | |

H. G. FISCHER & CO.
2335 WABANSIA AVE.
CHICAGO, ILL.

CAT. NO.

PART NO. 9676

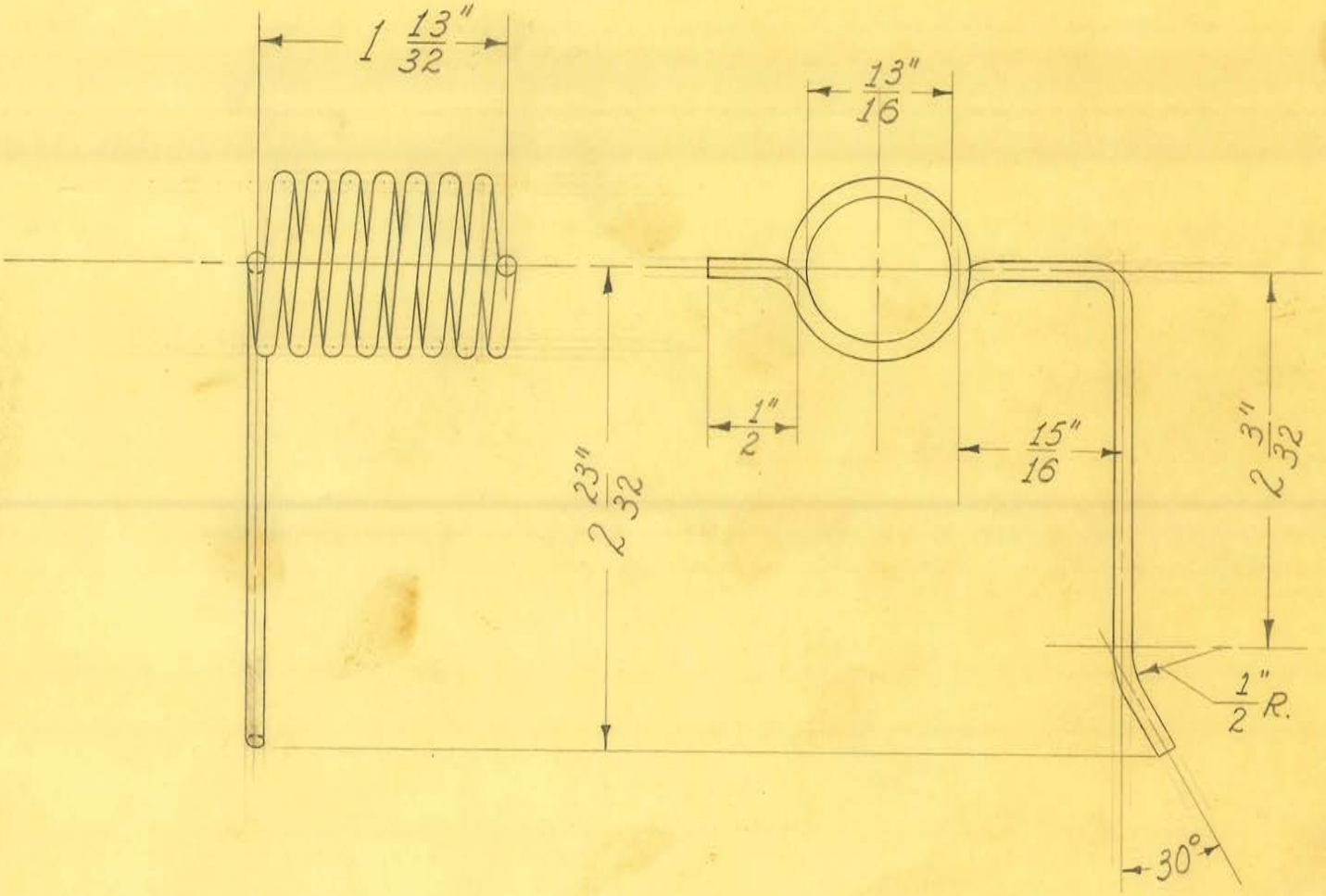


7 1/2 TURNS

1 REQUIRED

OBSOLETE

| | | | | |
|---|---|---|---|---|
| SIZE | #10 TINNED | ISSUE 3-12-37 | J.W. | TITLE: MODEL "C" SHORT WAVE PATIENT'S TUNING COIL – LEFT |
| KIND | COPPER WIRE | CHANGED | | |
| SHAPE | | " | | |
| FINISH | | " | | |
| TEMP. | | " | | |
| PATT. | | " | | |

H. G. FISCHER & CO.
2338 WABANSIA AVE.
CHICAGO, ILL.

CAT. NO.

PART NO. 9677

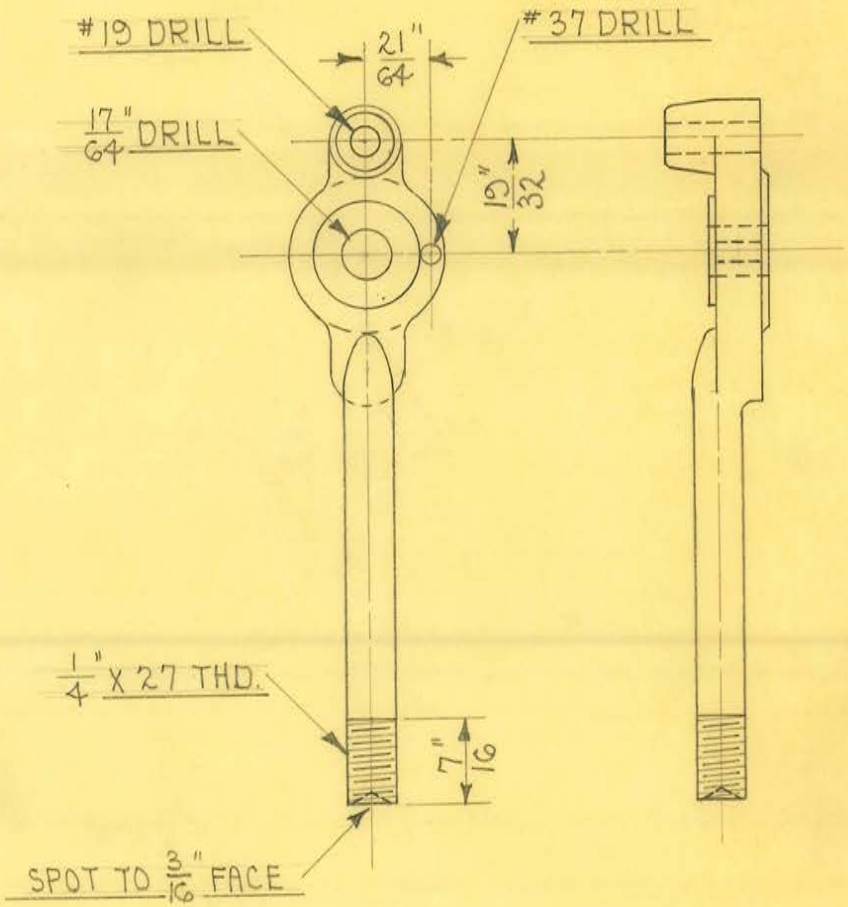


1 REQUIRED

OBSOLETE

| | | | | |
|---|---|---|---|---|
| SIZE | | ISSUE 3-23-37 | A.E. | TITLE: MODEL "C" SHORT WAVE OSCIL. COIL & TUBE CONN. ROD-RIGHT |
| KIND | BRASS CASTING | CHANGED | | |
| SHAPE | | " | | |
| FINISH | CAD. #23 | " | | |
| TEMP. | | " | | |
| PATT. | 9539-1087 | " | | |

H. G. FISCHER & CO.
2335 WABANSIA AVE.
CHICAGO, ILL.

CAT. NO.

PART NO. 9679F

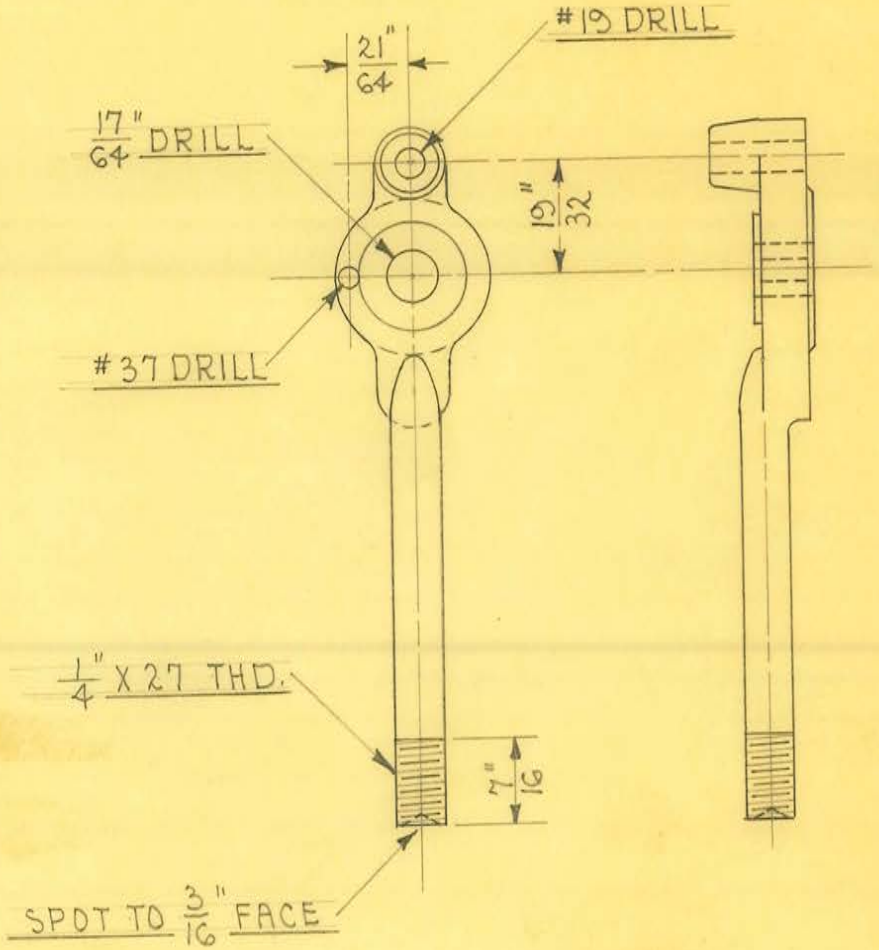


1 REQUIRED

OBSOLETE

| | | | |
|---|---|---|---|
| SIZE | | ISSUE 3-23-37 | A.E. |
| KIND | BRASS CASTING | CHANGED | |
| SHAPE | | " | |
| FINISH | CAD. #23 | " | |
| TEMP. | | " | |
| PATT. | 9539-1087 | " | |

**TITLE:** MODEL "C" SHORT WAVE
OSCIL. COIL & TUBE CONN. ROD - LEFT

H. G. FISCHER & CO.
2335 WABANSIA AVE.
CHICAGO, ILL.

CAT. NO.

PART NO. 9681

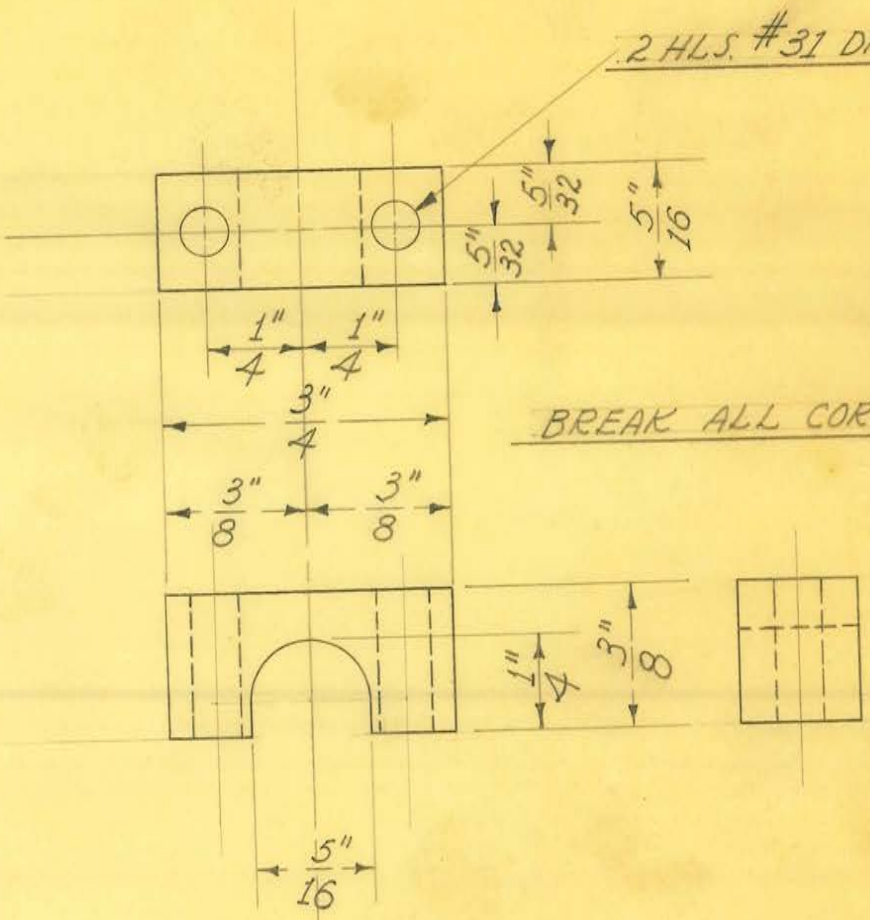


BREAK ALL CORNERS EXCEPT BOTTOM

SCALE ÷ DOUBLE SIZE

4 REQUIRED

OBSOLETE

| | | | | |
|---|---|---|---|---|
| SIZE | 5/16" SHEET | ISSUE 3-12-37 | J.W. | TITLE: MODEL "C" SHORT WAVE CORD CLAMP |
| KIND | BLACK FIBRE | CHANGED | | |
| SHAPE | | " | | |
| FINISH | | " | | |
| TEMP. | | " | | |
| PATT. | | " | | |

H. G. FISCHER & CO.
2335 WABANSIA AVE.
CHICAGO, ILL.

CAT. NO.

PART NO. 9684

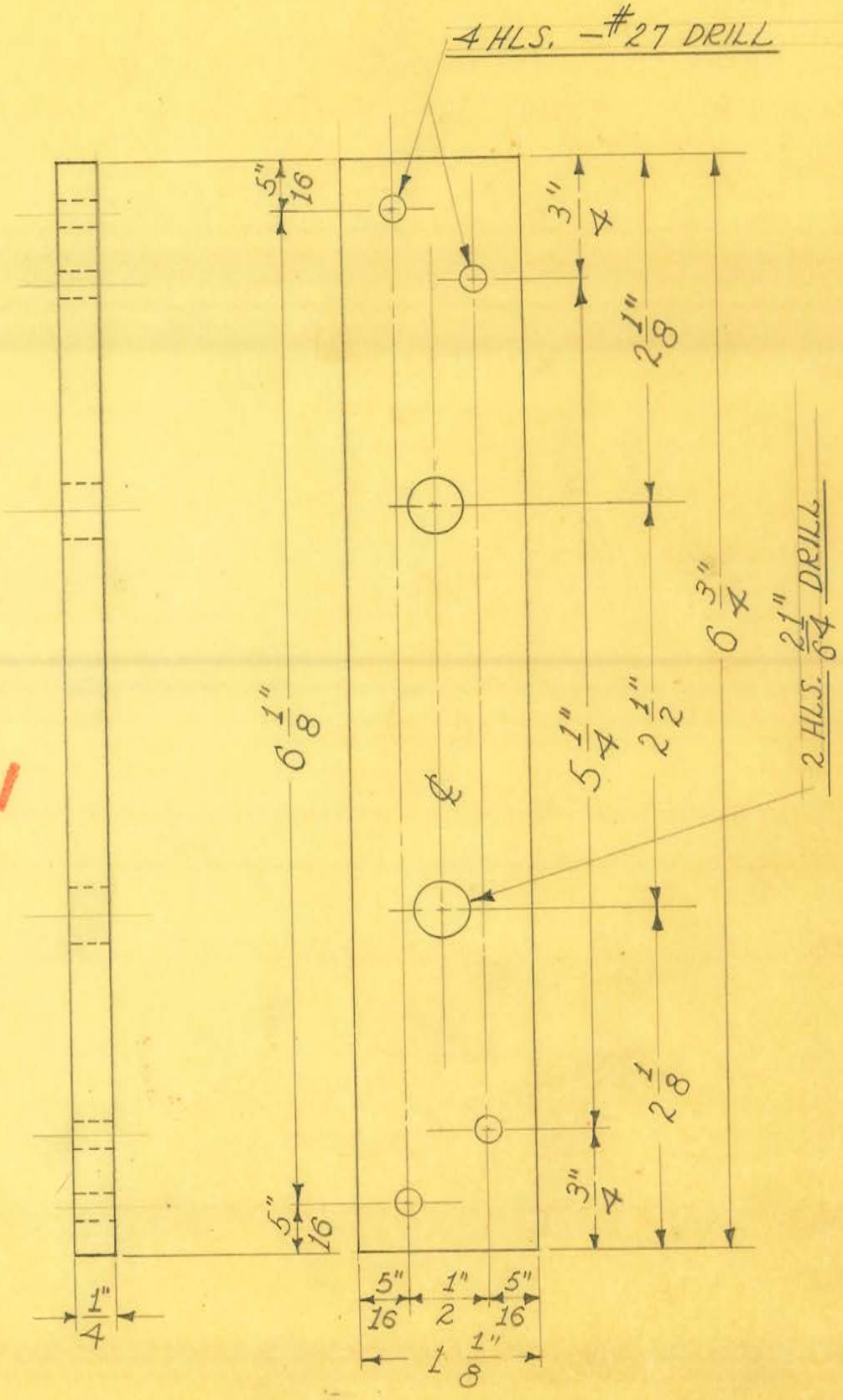


OBSOLETE

| | | | | |
|---|---|---|---|---|
| SIZE | | ISSUE 3-10-37 | J.W. | TITLE: MODEL "C" SHORT WAVE CORD SOCKET MTG. BOARD |
| KIND | ALSIMAG #35 | CHANGED | | |
| SHAPE | | " | | |
| FINISH | | " | | |
| TEMP. | | " | | |
| PATT. | | " | | |

H. G. FISCHER & CO.
2335 WABANSIA AVE.
CHICAGO, ILL.

CAT. NO.

PART NO. 9689

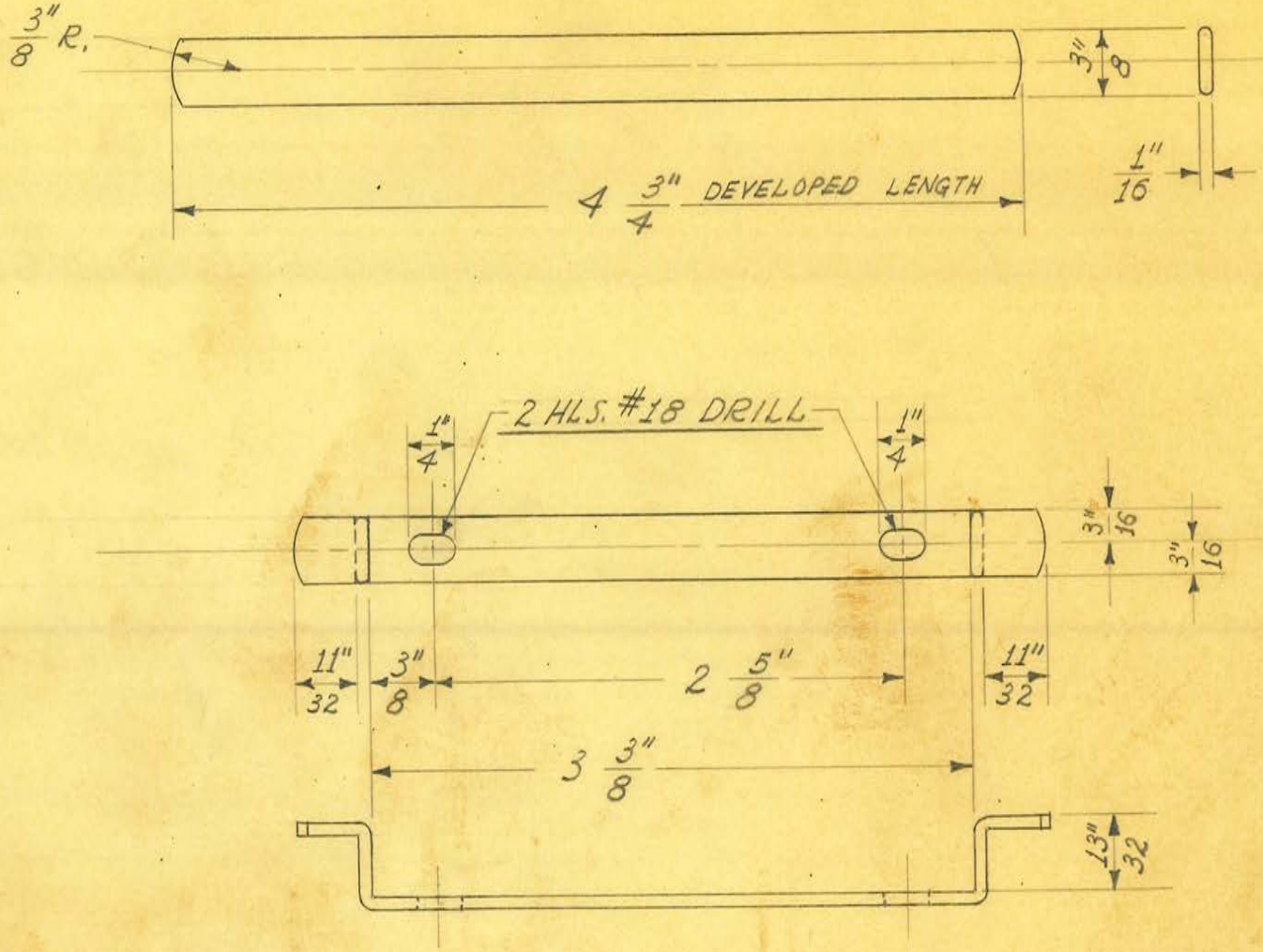


4 REQUIRED

OBSOLETE

| | | | |
|---|---|---|---|
| SIZE | 3/8" X 1/16" | ISSUE 11-4-37 | J.W. |
| KIND | FLAT WIRE | CHANGED | |
| SHAPE | | " | |
| FINISH | DU-LITE #8 | " | |
| TEMP. | | " | |
| PATT. | | " | |

**TITLE:** MODEL "C" SHORT WAVE - VENT. GRILL SUPP. CLAMP - LOWER

H. G. FISCHER & CO.
2335 WABANSIA AVE.
CHICAGO, ILL.

CAT. NO.

PART NO. 9693 1/2

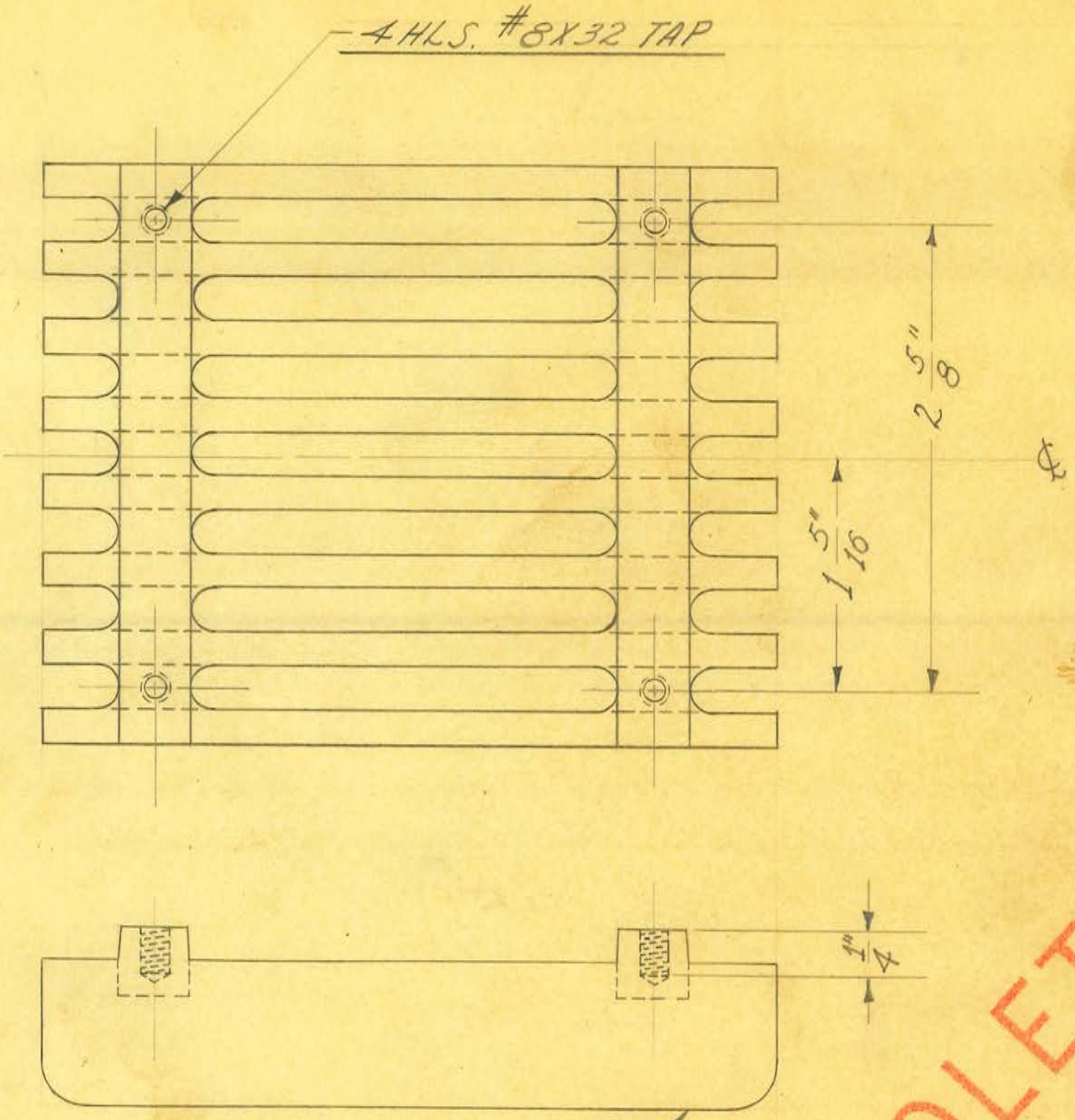


2 REQUIRED

OBSOLETE

| | | | |
|---|---|---|---|
| SIZE | | ISSUE 10-21-37 | J.W. |
| KIND | ALUM. CASTING | CHANGED | |
| SHAPE | | " | |
| FINISH | BLACK #80 | " | |
| TEMP. | | " | |
| PATT. | 9555-1089 | " | |

**TITLE:** MODEL "C" SHORT WAVE VENTILATOR GRILL

H. G. FISCHER & CO.
2335 WABANSIA AVE.
CHICAGO, ILL.

CAT. NO.

PART NO. 9694AF

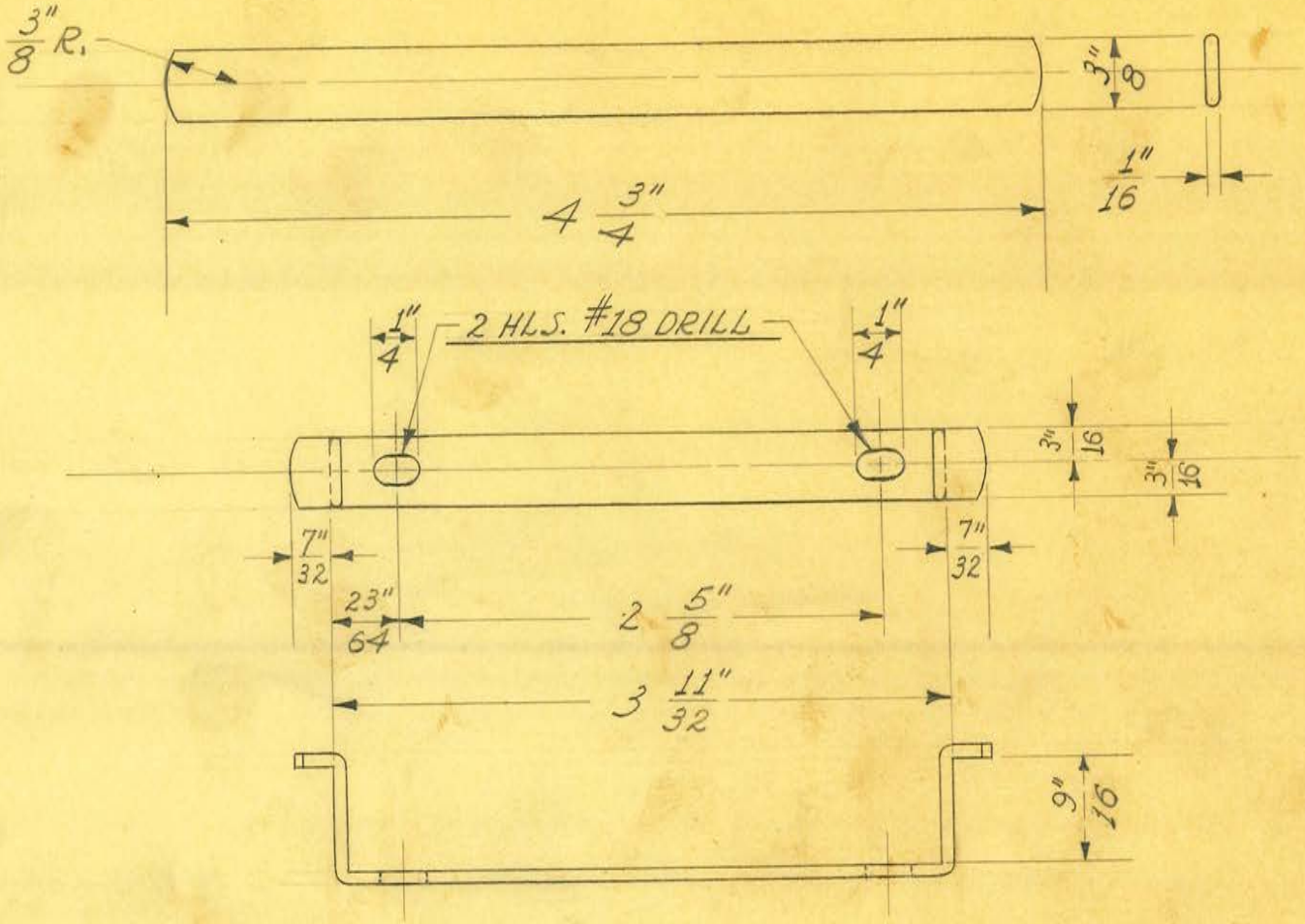


4 REQUIRED

OBSOLETE

| | | | |
|---|---|---|---|
| SIZE | 3/8" X 1/16" | ISSUE 11-4-37 | J.W. |
| KIND | FLAT WIRE | CHANGED | |
| SHAPE | | " | |
| FINISH | DU-LITE #8 | " | |
| TEMP. | | " | |
| PATT. | | " | |

**TITLE:** MODEL "C" SHORT WAVE - VENT. GRILL SUPP. CLAMP - UPPER

H. G. FISCHER & CO.
2335 WABANSIA AVE.
CHICAGO, ILL.

CAT. NO.

PART NO. 9694 1/2

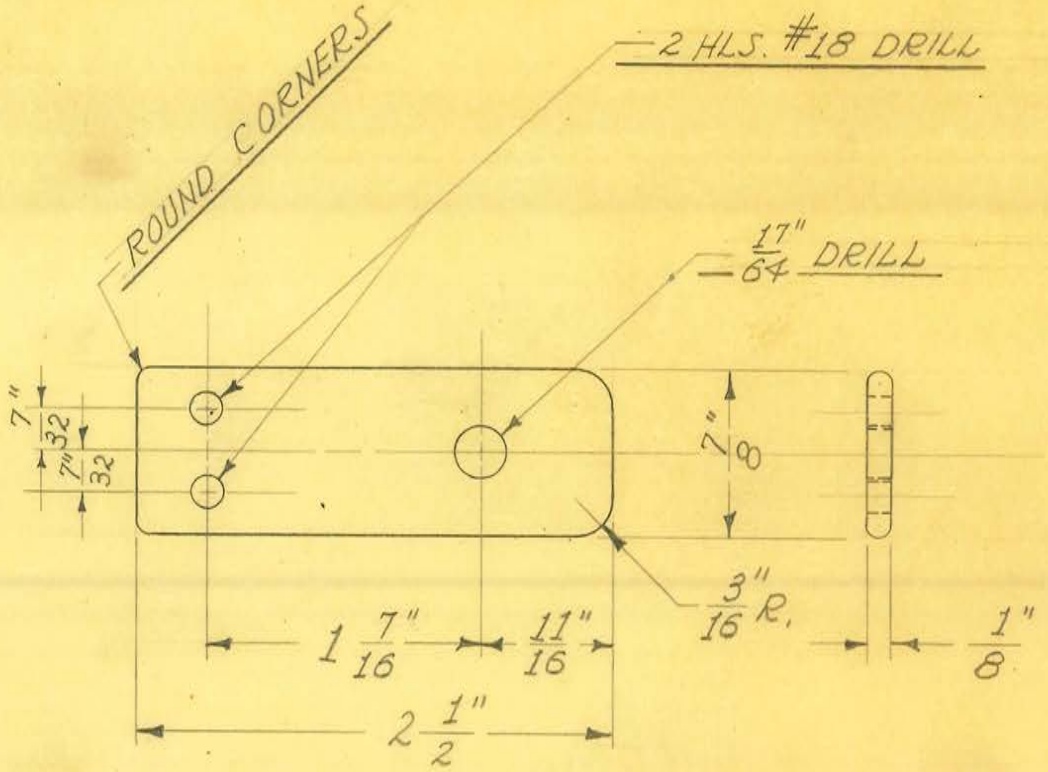


2 REQUIRED

OBSOLETE

| | | | | |
|---|---|---|---|---|
| SIZE | 1/8" X 7/8" | ISSUE 5-7-37 | J.W. | TITLE: MODEL "C" SHORT WAVE - R.F. CHOKE SUPPORT |
| KIND | FLAT WIRE | CHANGED | | |
| SHAPE | | " | | |
| FINISH | BLACK #80 | " | | |
| TEMP. | | " | | |
| PATT. | | " | | |

H. G. FISCHER & CO.
2335 WABANSIA AVE.
CHICAGO, ILL.

CAT. NO.

PART NO. 9697

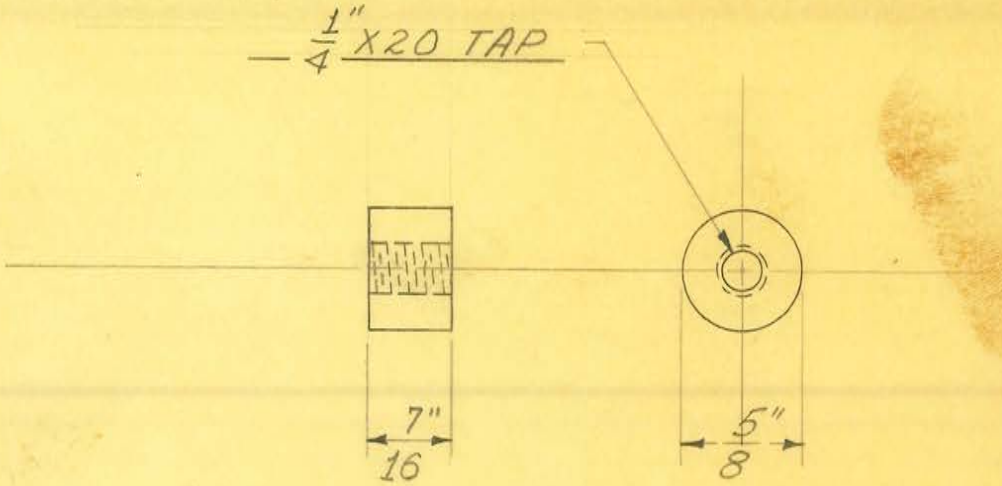


2 REQUIRED

OBSOLETE

| | | | | |
|---|---|---|---|---|
| SIZE | 5/8" DIAM. | ISSUE 5-7-37 | J.W. | TITLE: MODEL "C" SHORT WAVE R.F. CHOKE - CENTERING BUSHING |
| KIND | BAKELITE | CHANGED | | |
| SHAPE | ROD | " | | |
| FINISH | | " | | |
| TEMP. | | " | | |
| PATT. | | " | | |

H. G. FISCHER & CO.
2335 WABANSIA AVE.
CHICAGO, ILL.

CAT. NO.

PART NO. 9698

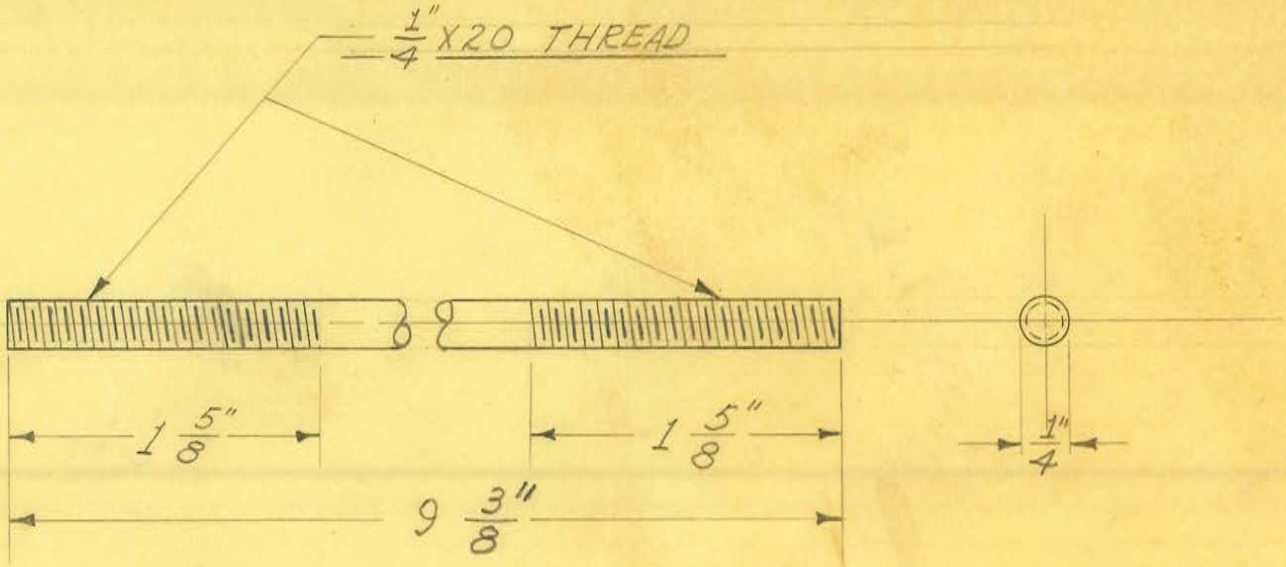


1 REQUIRED

OBSOLETE

| | | | |
|---|---|---|---|
| SIZE | 1/4" DIAM. | ISSUE 5-8-37 | J.W. |
| KIND | C.R. STEEL | CHANGED | |
| SHAPE | ROD | " | |
| FINISH | | " | |
| TEMP. | | " | |
| PATT. | | " | |

**TITLE:** MODEL "C" SHORT WAVE
R.F. CHOKE - SUPPORT ROD

H. G. FISCHER & CO.
2335 WABANSIA AVE.
CHICAGO, ILL.

CAT. NO.

PART NO. 9699

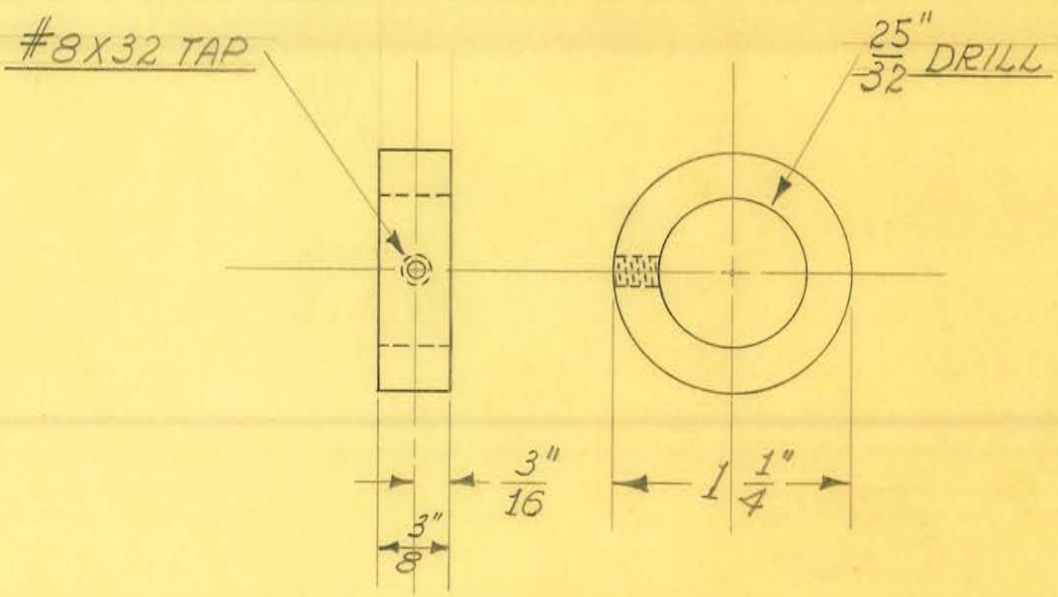


1 REQUIRED

OBSOLETE

| | | | |
|---|---|---|---|
| SIZE | 1 3/4" DIAM. | ISSUE 2-8-37 | J.W. |
| KIND | BRASS ROD | CHANGED | |
| SHAPE | | " | |
| FINISH | CHROME #2 | " | |
| TEMP. | | " | |
| PATT. | | " | |

**TITLE:** "SP-60" & "DS-60" STEREOSCOPIC SHIFT CLAMP RING

H. G. FISCHER & CO.
2335 WABANSIA AVE.
CHICAGO, ILL.

CAT. NO.

PART NO. 9703-1/2

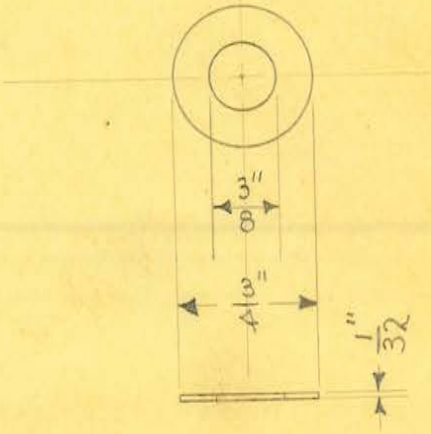


2 REQUIRED

OBSOLETE

| | | | |
|---|---|---|---|
| SIZE | 1/32" SHEET | ISSUE 8-5-35 | J.W. |
| KIND | FIBRE | CHANGED | |
| SHAPE | | " | |
| FINISH | | " | |
| TEMP. | | " | |
| PATT. | | " | |

**TITLE:** MOD. "SP-GO" SHOCKPROOF RAD. UNIT GUIDE ROLLER WASHER

H. G. FISCHER & CO.
2335 WABANSIA AVE.
CHICAGO, ILL.

CAT. NO.

PART NO. 9704

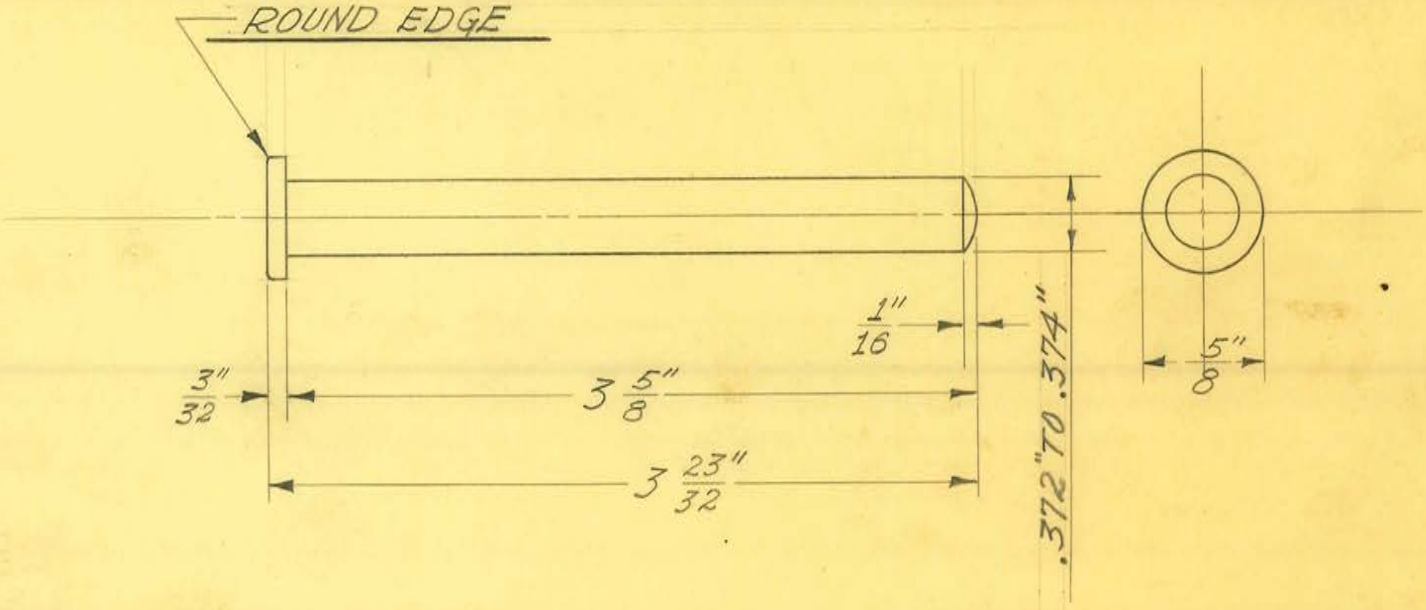


2 REQUIRED

OBSOLETE

| | | | |
|---|---|---|---|
| SIZE | 5/8" DIAM. | ISSUE 5-9-39 | J.W. |
| KIND | C.R. STEEL | CHANGED | |
| SHAPE | | " | |
| FINISH | CAD. #23 | " | |
| TEMP. | | " | |
| PATT. | | " | |

**TITLE:** MODEL "SP-60" SHOCKPROOF RAD. UNIT BASE ROLLER SHAFT

H. G. FISCHER & CO.
2335 WABANSIA AVE.
CHICAGO, ILL.

CAT. NO.

PART NO. 9711

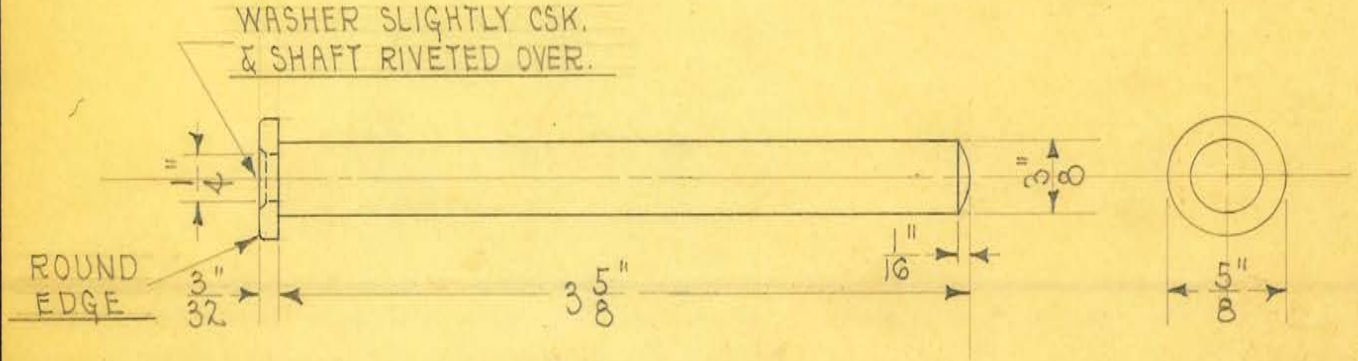


2 REQUIRED

OBSOLETE

obsolete

| | | | |
|---|---|---|---|
| SIZE | | ISSUE 7-8-35 | 9/6 |
| KIND | C.R. STEEL | CHANGED | |
| SHAPE | | " | |
| FINISH | CRD. #23 | " | |
| TEMP. | | " | |
| PATT. | | " | |

**TITLE:** MODEL "SP-60" SHOCKPROOF RAD. UNIT BASE ROLLER SHAFT

| | | |
|---|---|---|
| H. G. FISCHER & CO. 2335 WABANSIA AVE. CHICAGO, ILL. | CAT. NO. | PART NO. 9711G |

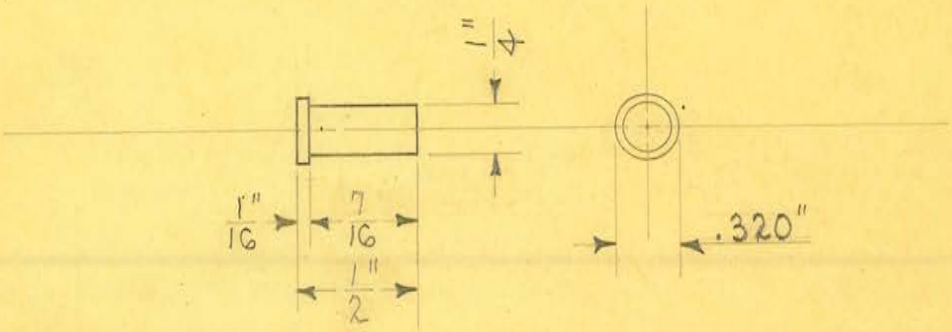


1 REQUIRED

OBSOLETE

| | | | |
|---|---|---|---|
| SIZE | 11/32" | ISSUE 7-10-35 | J.A.E. |
| KIND | BRASS ROD. | CHANGED | |
| SHAPE | | " | |
| FINISH | | " | |
| TEMP. | | " | |
| PATT. | | " | |

**TITLE:** MODEL "SP-60" SHOCKPROOF RAD. UNIT
SLIDE LOCK PLUNGER

H. G. FISCHER & CO.
2335 WABANSIA AVE.
CHICAGO, ILL.

CAT. NO.

PART NO. 9718

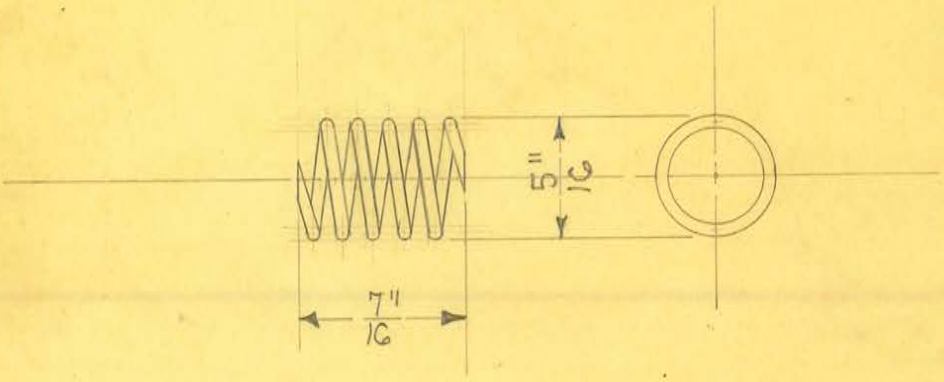


5 TURNS

SCALE ≈ 1" = 1/2"

OBSOLETE

| | | | |
|---|---|---|---|
| SIZE | .025" | ISSUE 7-10-35 | 2.8 |
| KIND | MUSIC WIRE | CHANGED | |
| SHAPE | | " | |
| FINISH | | " | |
| TEMP. | | " | |
| PATT. | | " | |

**TITLE:** MODEL "SP-GO" SHOCKPROOF RAD. UNIT
SLIDE LOCK SPRING

H. G. FISCHER & CO.
2335 WABANSIA AVE.
CHICAGO, ILL.

CAT. NO.

PART NO. 9719

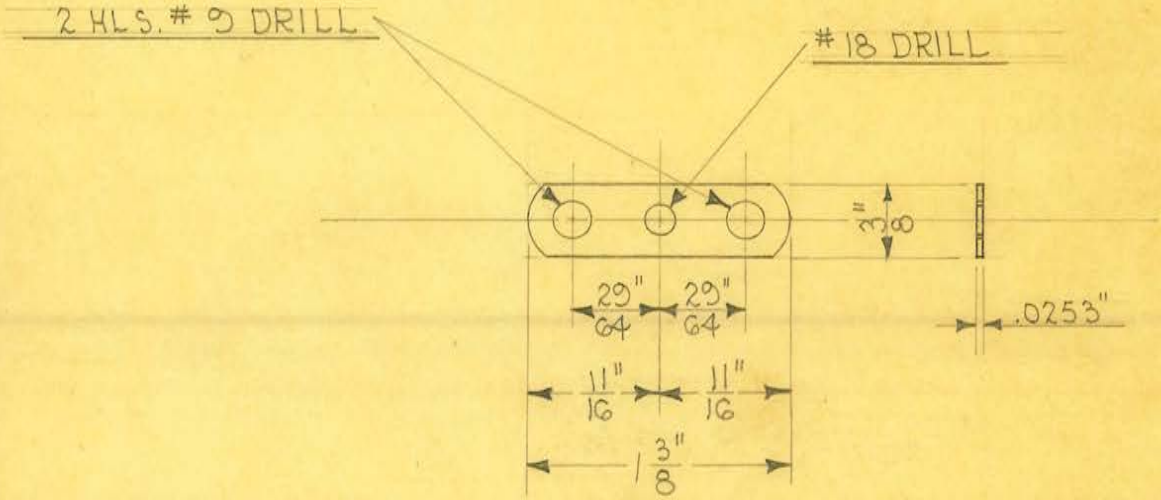


2 REQUIRED

OBSOLETE

| | | | |
|---|---|---|---|
| SIZE | #22 B.&S.GA. | ISSUE 5-18-36 | A.E. |
| KIND | STRIP BRASS | CHANGED | |
| SHAPE | | " | |
| FINISH | | " | |
| TEMP. | | " | |
| PATT. | | " | |

**TITLE:** MODEL "SP-60" SHOCKPROOF RAD. UNIT CONTROL BOX RESISTOR CONNECTOR

H. G. FISCHER & CO.
2335 WABANSIA AVE.
CHICAGO, ILL.

CAT. NO.

PART NO. 9719 1/2

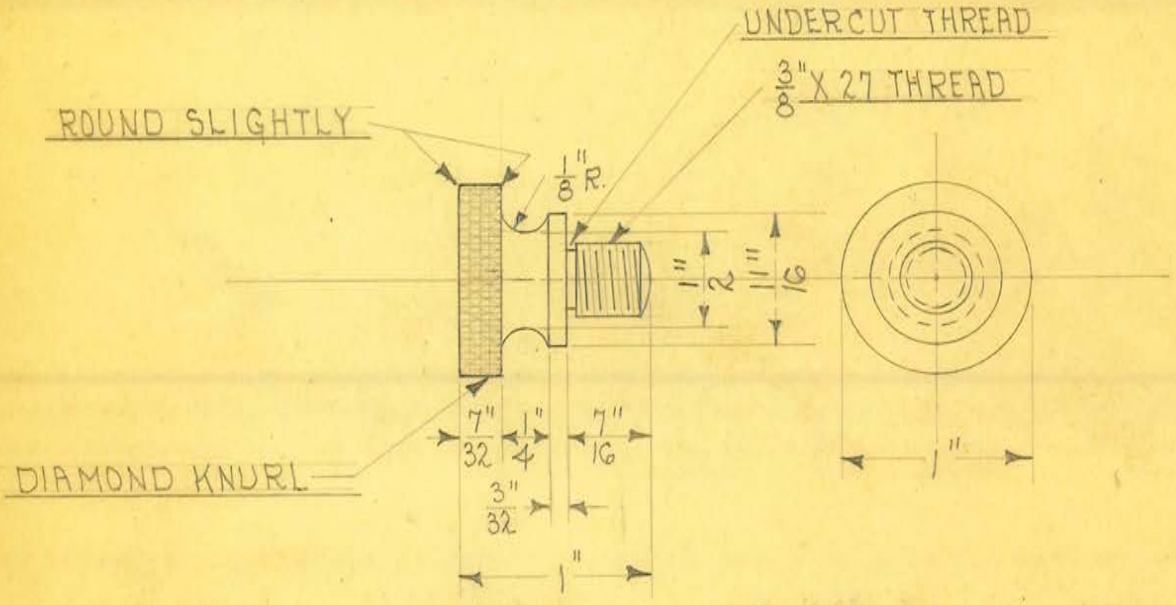


1 REQUIRED

OBSOLETE

| | | | |
|---|---|---|---|
| SIZE | 1" | ISSUE 7-10-35 | N.E. |
| KIND | BRASS ROD | CHANGED | |
| SHAPE | | " | |
| FINISH | CHROME #2 | " | |
| TEMP. | | " | |
| PATT. | | " | |

**TITLE:**
MODEL "SP-60" SHOCKPROOF RAD. UNIT
SLIDE LOCK THUMB SCREW

H. G. FISCHER & CO.
2335 WABANSIA AVE.
CHICAGO, ILL.

CAT. NO.

PART NO. 9720

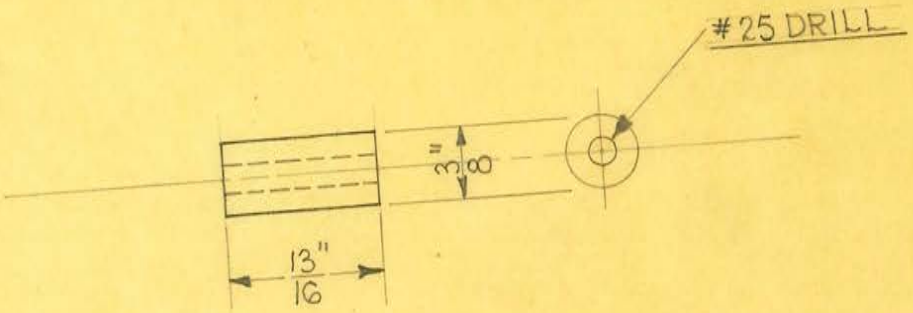


4 REQUIRED

OBSOLETE

| | | | | |
|---|---|---|---|---|
| SIZE | 3/8" DIAM. | ISSUE 4-6-36 | J.E. | TITLE: MODEL "SP-60" SHOCKPROOF RAD. UNIT CONTROL BOX RHEOSTAT SPACER |
| KIND | BRASS ROD | CHANGED | | |
| SHAPE | | " | | |
| FINISH | | " | | |
| TEMP. | | " | | |
| PATT. | | " | | |

H. G. FISCHER & CO.
2335 WABANSIA AVE.
CHICAGO, ILL.

CAT. NO.

PART NO. 9720 1/2

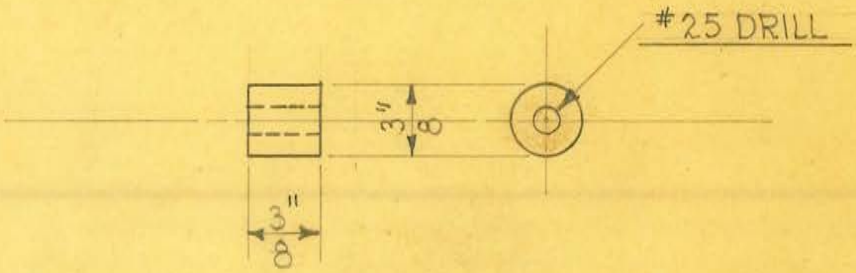


12 REQUIRED

OBSOLETE

| | | | |
|---|---|---|---|
| SIZE | 3/8" DIAM. | ISSUE 4-6-36 | A.E. |
| KIND | BRASS ROD | CHANGED | |
| SHAPE | | " | |
| FINISH | | " | |
| TEMP. | | " | |
| PATT. | | " | |

**TITLE:** MODEL "SP-60" SHOCKPROOF RAD. UNIT
CONTROL BOX- 5, 9 & 10 POINT SW. SPACER

H. G. FISCHER & CO.
2335 WABANSIA AVE.
CHICAGO, ILL.

CAT. NO.

PART NO. 9721 1/2

70

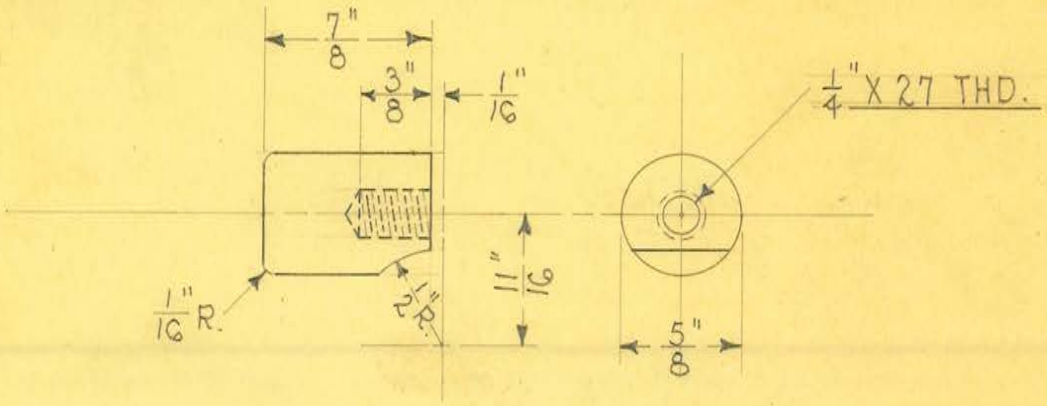


1 REQUIRED

OBSOLETE

| | | | |
|---|---|---|---|
| SIZE | 5/8" | ISSUE 7-11-35 | A.E. |
| KIND | BRASS ROD | CHANGED | |
| SHAPE | | " | |
| FINISH | CAD. #23 | " | |
| TEMP. | | " | |
| PATT. | | " | |

**TITLE:** MODEL "SP-60" SHOCKPROOF RAD. UNIT TUBE HEAD SWIVEL FRICTION LOCK PIECE - REAR

H. G. FISCHER & CO.
2335 WABANSIA AVE.
CHICAGO, ILL.

CAT. NO.

PART NO. 9722

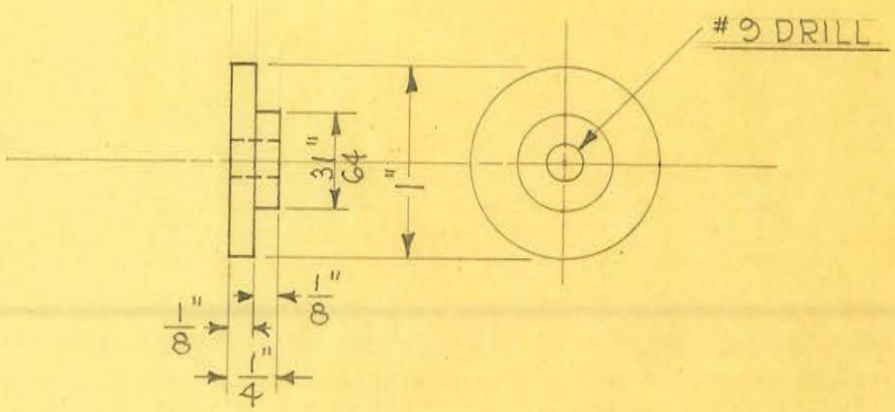


8 REQUIRED

OBSOLETE

| | | | |
|---|---|---|---|
| SIZE | 1" DIAM. | ISSUE 4-4-36 | 24.6 |
| KIND | BAKELITE ROD | CHANGED | |
| SHAPE | | " | |
| FINISH | | " | |
| TEMP. | | " | |
| PATT. | | " | |

**TITLE:** MODEL "SP-60" SHOCKPROOF RAD. UNIT CONTROL BOX - RESISTOR WASHER

H. G. FISCHER & CO.
2335 WABANSIA AVE.
CHICAGO, ILL.

CAT. NO.

PART NO. 9722 1/2

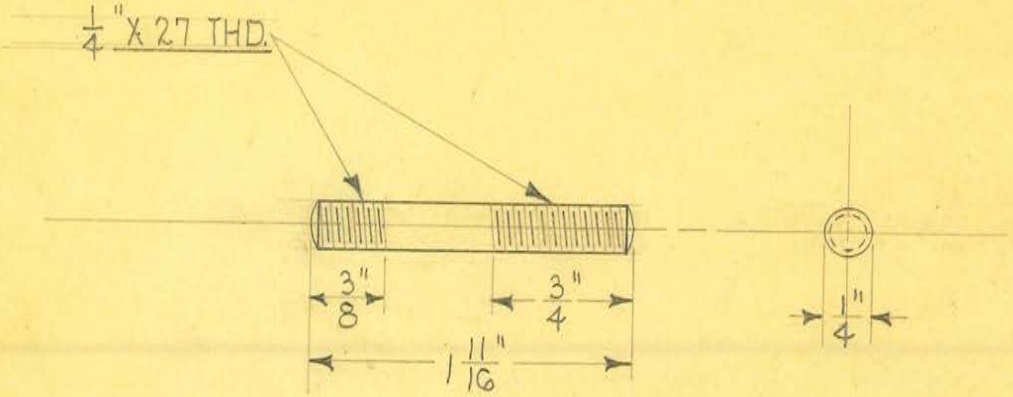


1 REQUIRED

OBSOLETE

| | | | |
|---|---|---|---|
| SIZE | 1/4" | ISSUE 7-11-35 | A.E. |
| KIND | BRASS ROD | CHANGED | |
| SHAPE | | " | |
| FINISH | CAD. #23 | " | |
| TEMP. | | " | |
| PATT. | | " | |

**TITLE:** MODEL "SP-GO" SHOCKPROOF RAD. UNIT TUBE HEAD SWIVEL FRICTION LOCK STUD

H. G. FISCHER & CO.
2335 WABANSIA AVE.
CHICAGO, ILL.

CAT. NO.

PART NO. 9723

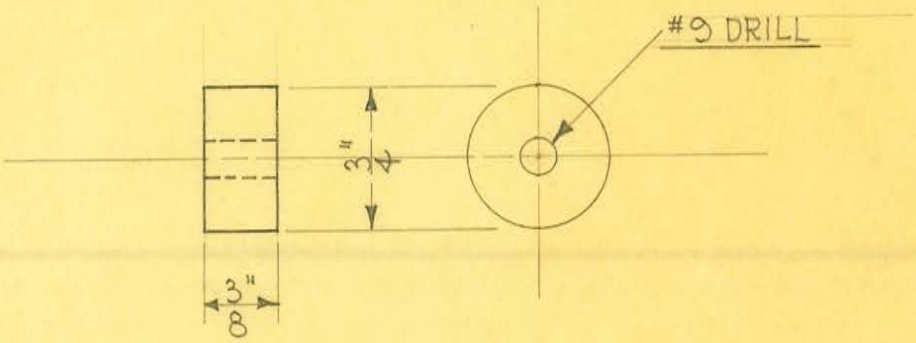


4 REQUIRED

OBSOLETE

| | | | |
|---|---|---|---|
| SIZE | 3/4" DIAM. | ISSUE 4-4-36 | 3/8 |
| KIND | BAKELITE ROD | CHANGED | |
| SHAPE | | " | |
| FINISH | | " | |
| TEMP. | | " | |
| PATT. | | " | |

**TITLE:** MODEL "SP-60" SHOCKPROOF RAD. UNIT CONTROL BOX-RESISTOR SPACER

H. G. FISCHER & CO.
2335 WABANSIA AVE.
CHICAGO, ILL.

CAT. NO.

PART NO. 9723 1/2

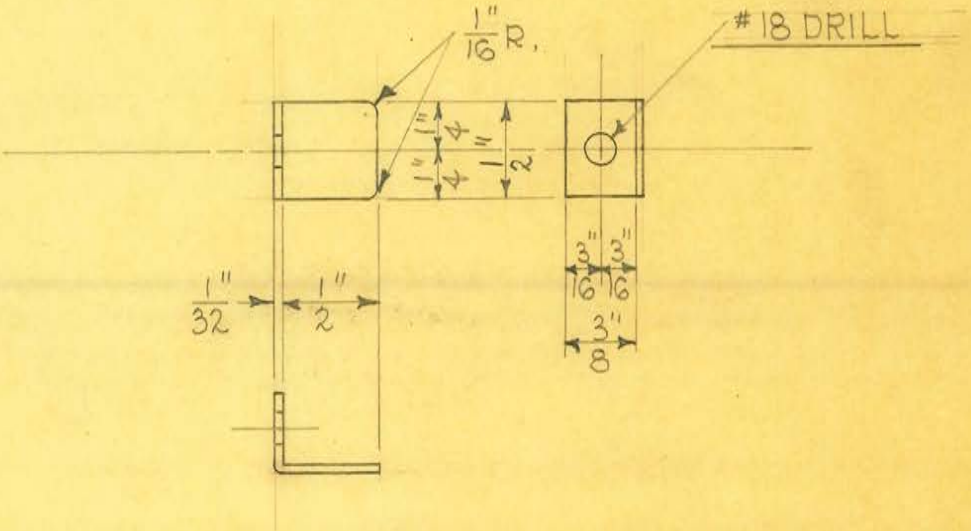


2 REQUIRED

OBSOLETE

| | | | | |
|---|---|---|---|---|
| SIZE | 1/32" | ISSUE 3-19-36 | A.E. | TITLE: UNIVERSAL "60-88" CONTROL BOX 10 POINT SWITCH CONTACT POINT NUT INSULATOR |
| KIND | SHEET FIBRE | CHANGED | | |
| SHAPE | | " | | |
| FINISH | | " | | |
| TEMP. | | " | | |
| PATT. | | " | | |

H. G. FISCHER & CO.
2335 WABANSIA AVE.
CHICAGO, ILL.

CAT. NO.

PART NO. 8432 1/2

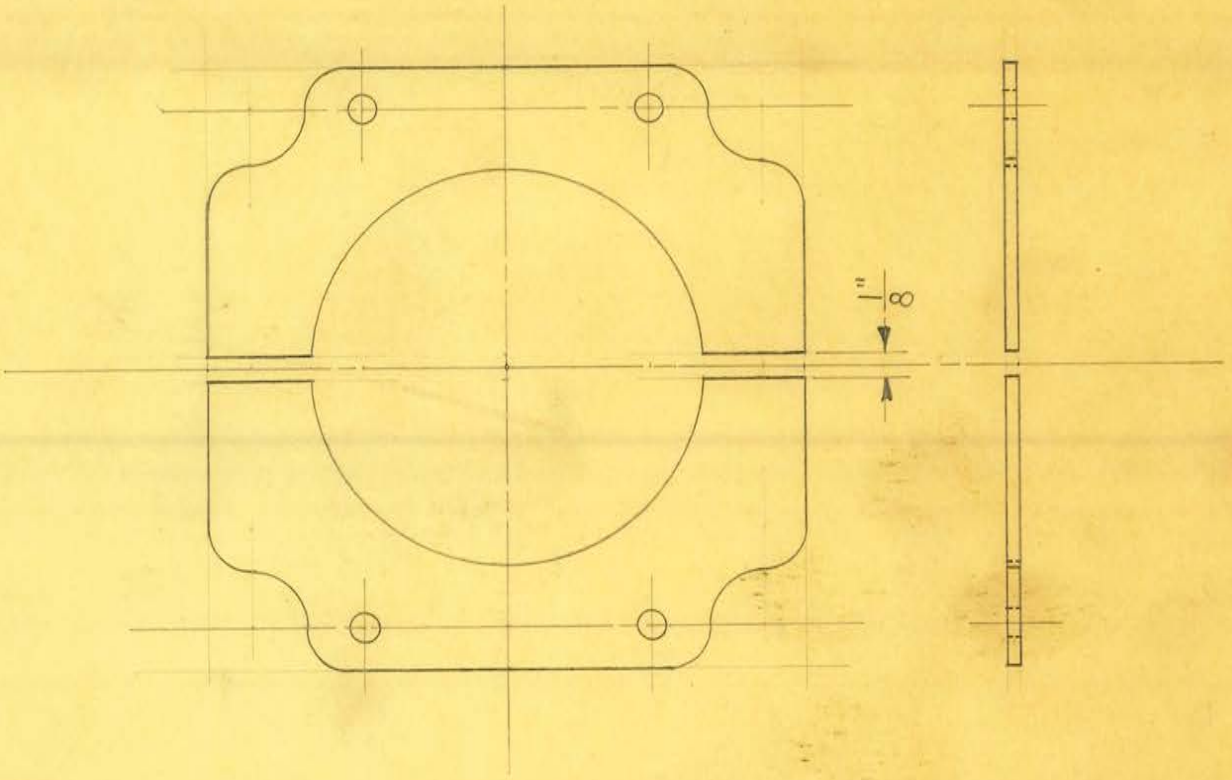


1 REQUIRED
FROM 2243 1/4

OBSOLETE

| | | | |
|---|---|---|---|
| SIZE | | ISSUE 4-20-36 | J.E. |
| KIND | | CHANGED | |
| SHAPE | | " | |
| FINISH | | " | |
| TEMP. | | " | |
| PATT. | | " | |

**TITLE:** UNIVERSAL "CO-88" CONTROL BOX 10 PT. SW. CONTACT RING-SET

H. G. FISCHER & CO.
2335 WABANSIA AVE.
CHICAGO, ILL.

CAT. NO.

PART NO. 8434

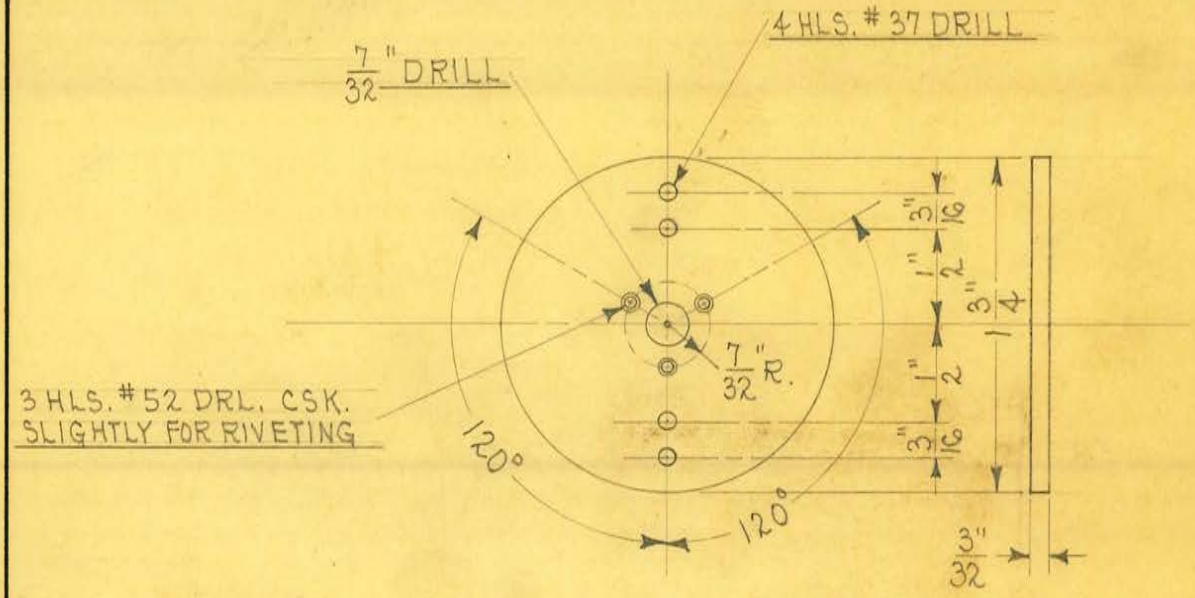


1 REQUIRED

OBSOLETE

| | | | | |
|---|---|---|---|---|
| SIZE | 3/32" BLACK | ISSUE 7-16-34 | A.E. | **TITLE:** UNIVERSAL "60-88" CONTROL BOX<br>10 POINT SWITCH CONTACT SET MOUNTING DISC |
| KIND | SHEET FIBROC | CHANGED | | |
| SHAPE | | " | | |
| FINISH | | " | | |
| TEMP. | | " | | H. G. FISCHER & CO.<br>2335 WABANSIA AVE.<br>CHICAGO, ILL. |
| PATT. | | " | | CAT. NO. |
| | | | | PART NO. 8435 |

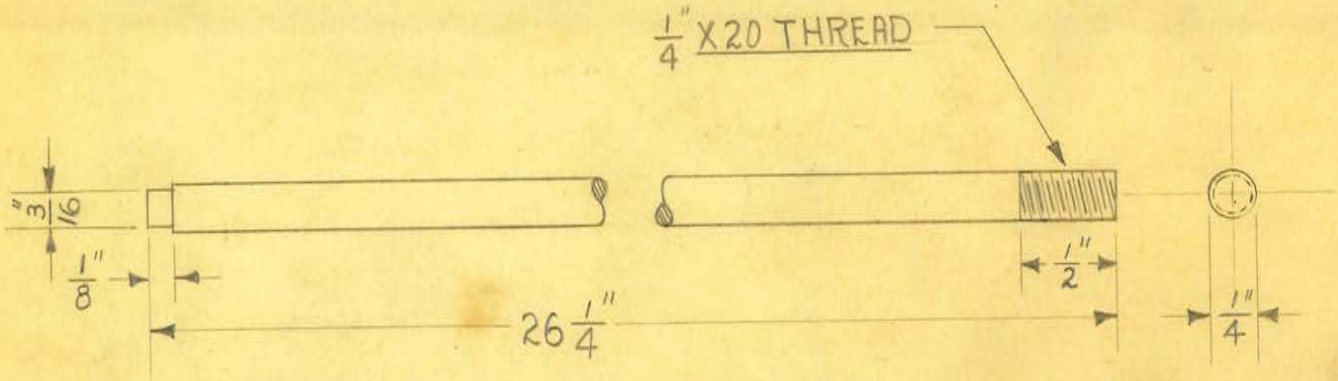


1 REQUIRED

OBSOLETE

| | | | | |
|---|---|---|---|---|
| SIZE | 1/4" C.R. STEEL | ISSUE 2-19-35 | J.W. | TITLE: TABLE FRONT SUPPORT TIE ROD FOR BUCKY CASSETTE HOLDER |
| KIND | ROD | CHANGED | | |
| SHAPE | | " | | |
| FINISH | | " | | |
| TEMP. | | " | | |
| PATT. | | " | | |

H. G. FISCHER & CO.
2335 WABANSIA AVE.
CHICAGO, ILL

CAT. NO.

PART NO. 8441

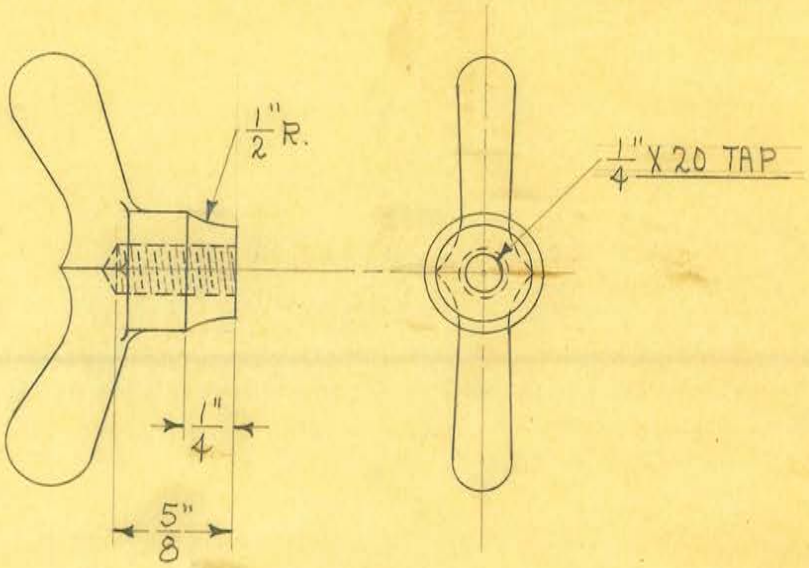


1 REQUIRED
FROM 5705

OBSOLETE

| | | | | |
|---|---|---|---|---|
| SIZE | | ISSUE 2-20-35 | A.E. | **TITLE:** TABLE FRONT SUPPORT WING NUT FOR BUCKY CASSETTE HOLDER |
| KIND | CAST IRON | CHANGED | | |
| SHAPE | | " | | |
| FINISH | BLACK #50 | " | | |
| TEMP. | | " | | |
| PATT. | | " | | |

H. G. FISCHER & CO.
2335 WABANSIA AVE.
CHICAGO, ILL

CAT. NO.

PART NO. 8442

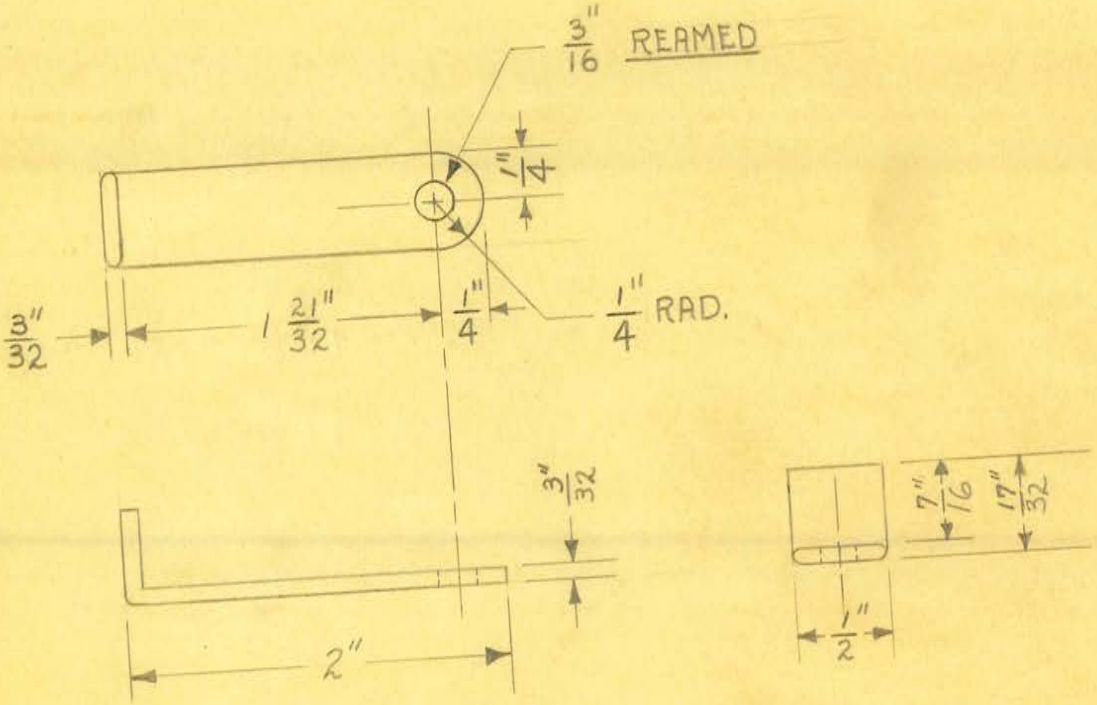


1 REQUIRED

DEVELOPED LENGTH 2 7/16"

OBSOLETE

| | | | | | |
|---|---|---|---|---|---|
| SIZE | 3/32" X 1/2" | ISSUE 12-20-35 | J.W. | TITLE: TABLE FRONT SUPPORT CLAMP FOR BUCKY CASSETTE HOLDER - STATIONARY | |
| KIND | FLAT WIRE | CHANGED | | | |
| SHAPE | | " | | | |
| FINISH | | " | | | |
| TEMP. | | " | | | |
| PATT. | | " | | | |

H. G. FISCHER & CO.
2335 WABANSIA AVE.
CHICAGO, ILL

CAT. NO.

PART NO. 8443

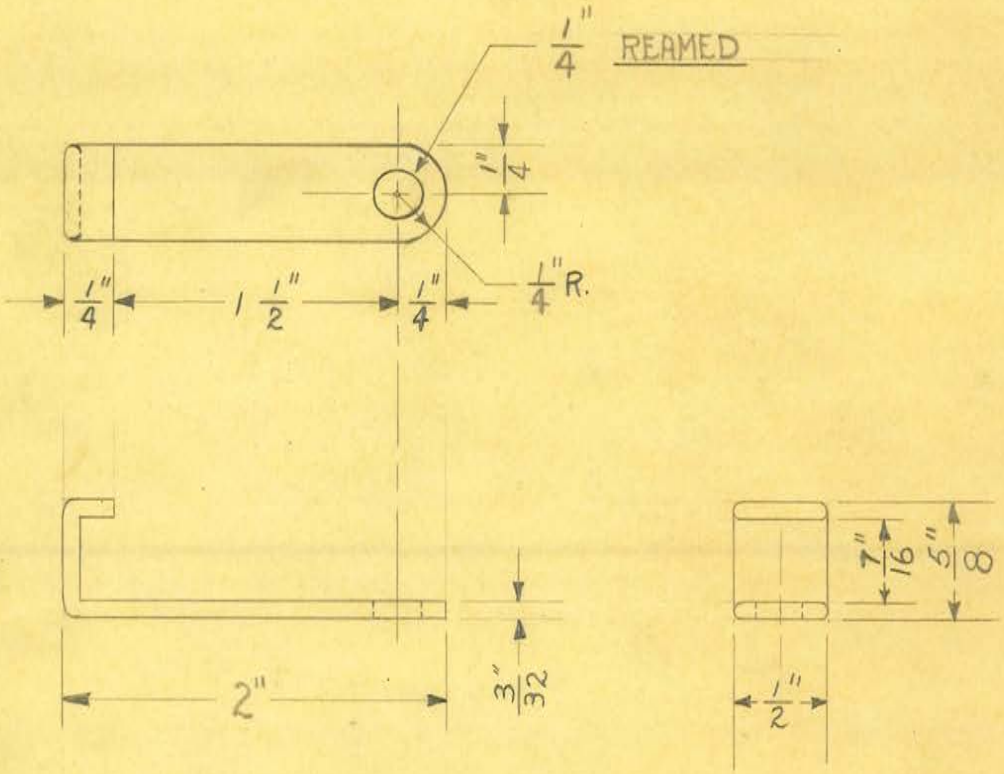


1 REQUIRED

DEVELOPED LENGTH 2 21/32"

OBSOLETE

| | | | | |
|---|---|---|---|---|
| SIZE | 3/32" X 1/2" | ISSUE 2-19-35 | J.W. | **TITLE:** TABLE FRONT SUPPORT CLAMP FOR BUCKY CASSETTE HOLDER-ADJUSTABLE |
| KIND | FLAT WIRE | CHANGED | | |
| SHAPE | | " | | |
| FINISH | CAD. #23 | " | | |
| TEMP. | | " | | |
| PATT. | | " | | |

H. G. FISCHER & CO.
2335 WABANSIA AVE.
CHICAGO, ILL

CAT. NO.

PART NO. 8444

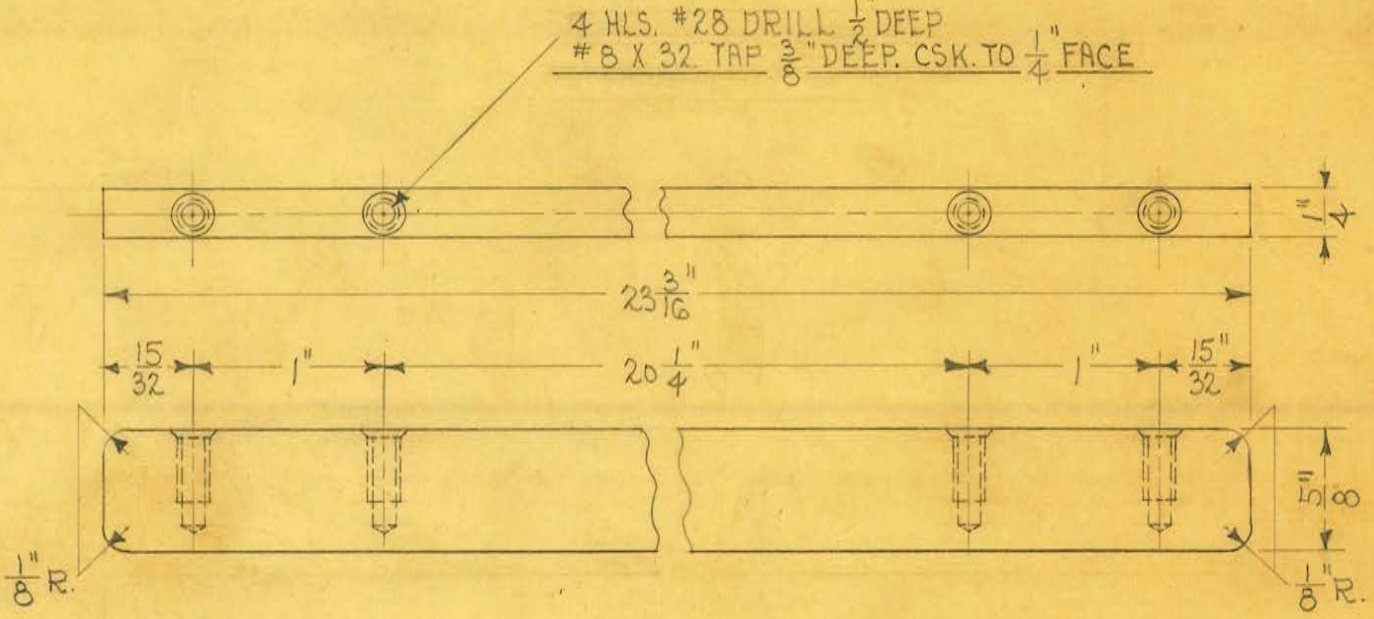


1 REQUIRED

OBSOLETE

| | | | | |
|---|---|---|---|---|
| SIZE | 1/4" X 5/8" | ISSUE 12-15-33 | J.E. | **TITLE:** FISCHER FLAT BUCKY CASE BRACING STRIP |
| KIND | C.R. STEEL | CHANGED | | |
| SHAPE | | " | | |
| FINISH | CAD. PLATE | " | | |
| TEMP. | | " | | |
| PATT. | | " | | |

H. G. FISCHER & CO.
2335 WABANSIA AVE.
CHICAGO, ILL.

CAT. NO.

PART NO. 8452

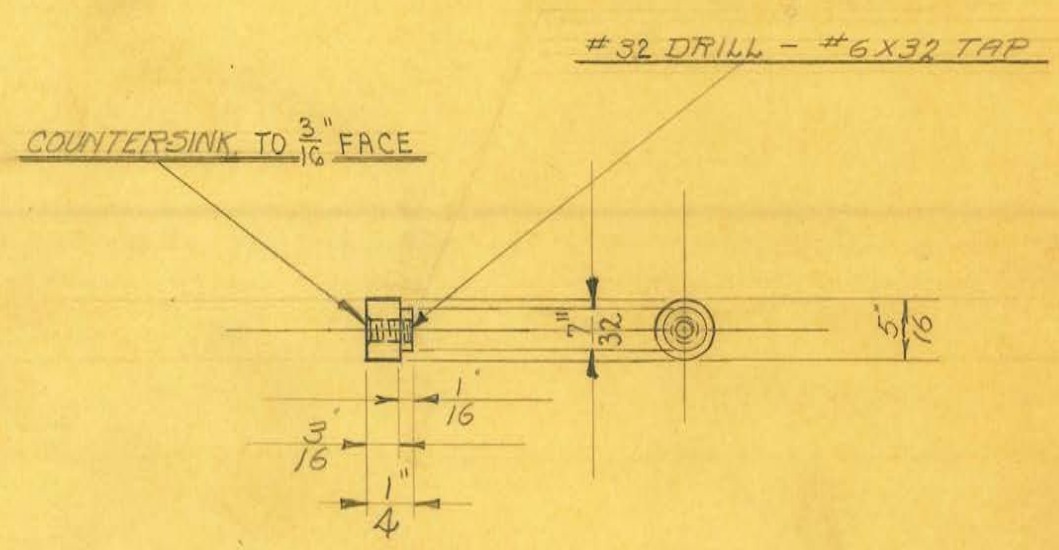


3 REQUIRED

OBSOLETE

| | | | | | | |
|---|---|---|---|---|---|---|
| SIZE | 5/16 ROD | ISSUE | NP | TITLE: FISCHER FLAT BUCKY CASSETTE HOLDER LEFT CHANNEL STUD | | |
| KIND | C. R. STEEL | CHANGED | | | | |
| SHAPE | | " | | | | |
| FINISH | CAD. PLATE | " | | | | |
| TEMP. | | " | | H. G. FISCHER & CO. 2335 WABANSIA AVE. CHICAGO, ILL. | CAT. NO. | PART NO. 8454 |
| PATT. | | " | | | | |

DRILL IN JIG # 3512

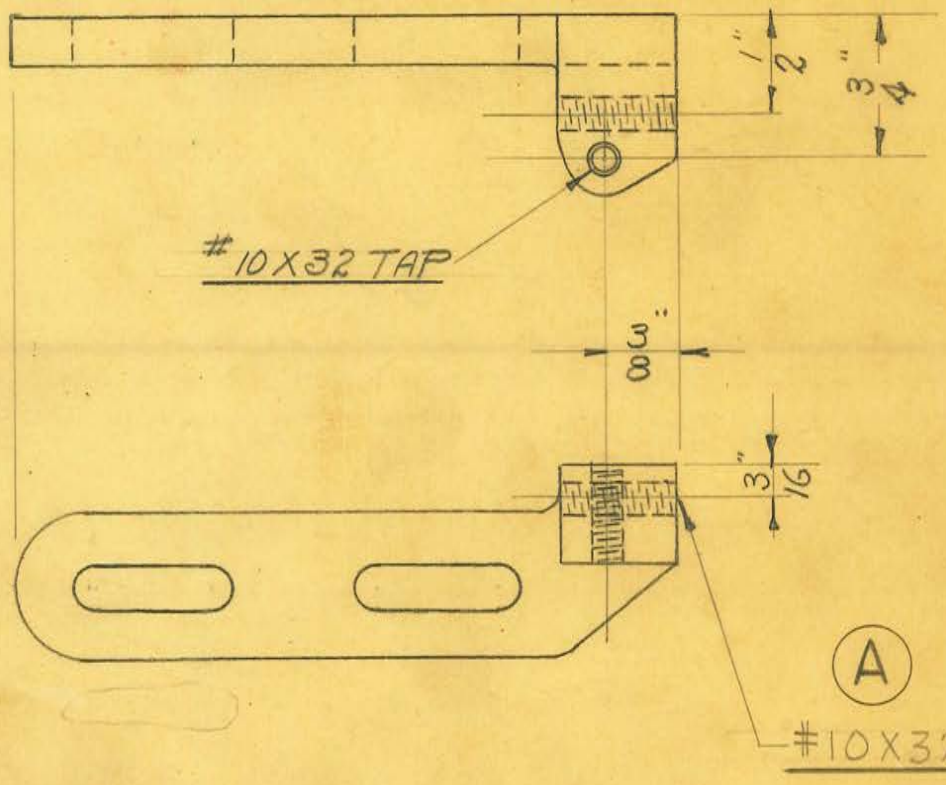


OBSOLETE

2 REQUIRED "RIGHT"

| REVISION | | DATE | BY |
|---|---|---|---|
| A | WAS $\frac{3}{16}$" REAMED | 3-6-51 | J.V.W. |

| | | | |
|---|---|---|---|
| SIZE | | ISSUE 11-28-33 | N.P |
| KIND | BRASS CAST. | CHANGED | |
| SHAPE | | " | |
| FINISH | CAD. PLATE | " | |
| TEMP. | | " | |
| PATT. | 7429-678 | " | |

**TITLE:** FISCHER FLAT BUCKY BALL BEARING SUPPORT - RIGHT

H. G. FISCHER & CO.
2335 WABANSIA AVE.
CHICAGO, ILL.

CAT. NO.

PART NO. 8455 $\frac{1}{2}$ AF

DRILL IN JIG # 3512

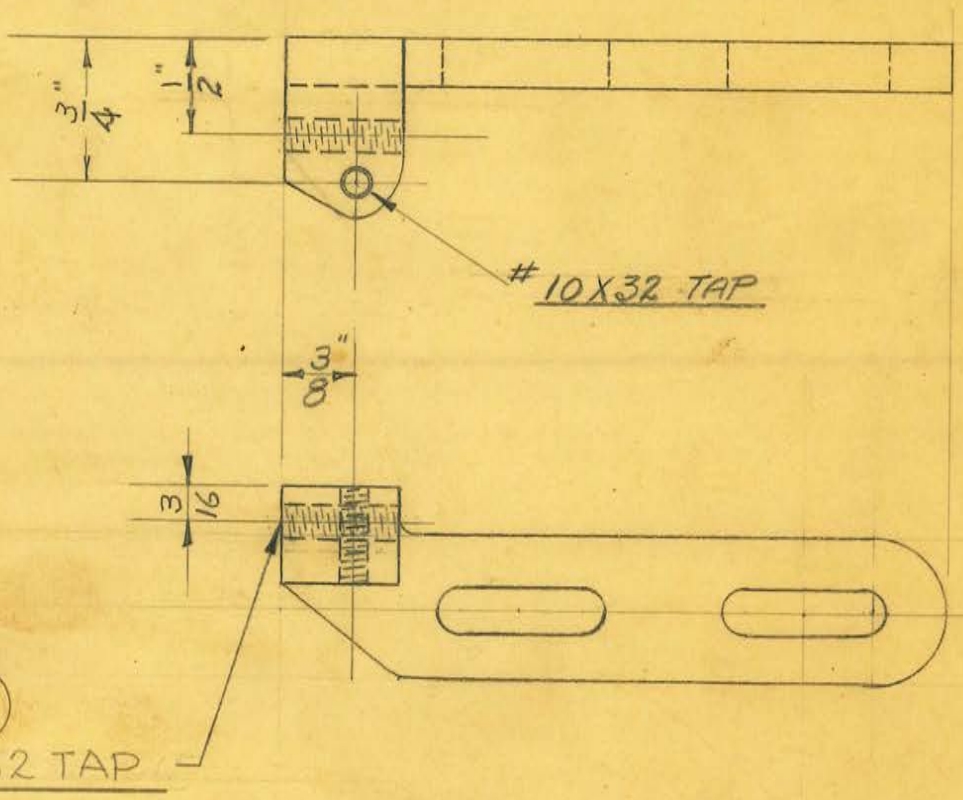


2 REQUIRED "LEFT"

OBSOLETE

| REVISION | | DATE | BY |
|---|---|---|---|
| A | WAS 3/16" REAMED | 3-6-51 | J.V.W. |

| | | | |
|---|---|---|---|
| SIZE | | ISSUE 11-28-33 | N.P. |
| KIND | BRASS CASTING | CHANGED | |
| SHAPE | | " | |
| FINISH | CAD. PLATE | " | |
| TEMP. | | " | |
| PATT. | 7409-676 | " | |

TITLE: FISCHER FLAT BUCKY BALL BEARING SUPPORT - LEFT

H. G. FISCHER & CO.
2335 WABANSIA AVE.
CHICAGO, ILL.

CAT. NO.

PART NO. 8455FA

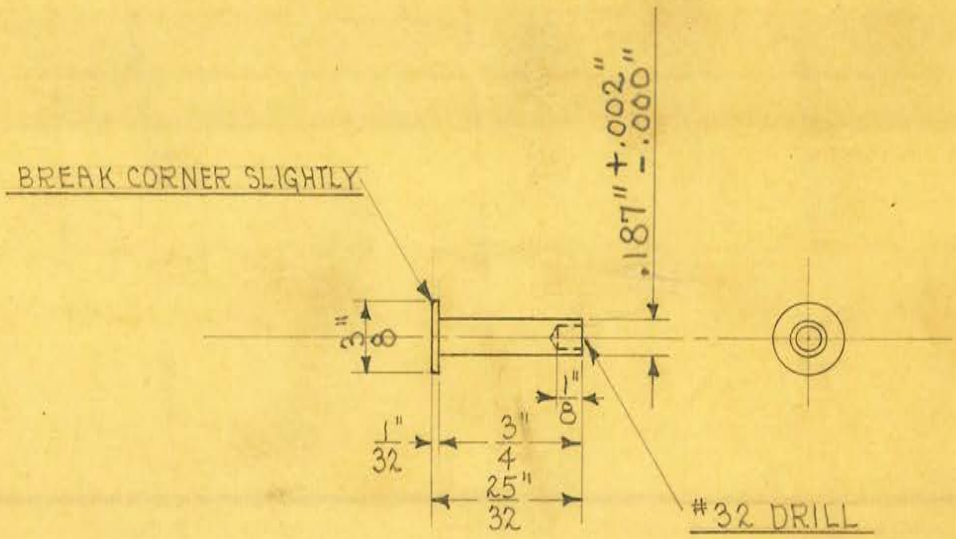


4 REQUIRED

FRACTIONAL DIMENSIONS ±.010"

OBSOLETE

obsolete
3-6-51

| | | | | | | |
|---|---|---|---|---|---|---|
| SIZE | 3/8" DIA. | ISSUE 12-28-33 | A.E. | TITLE: FISCHER FLAT BUCKY BALL BEARING ROLLER STUD | | |
| KIND | C.R. STEEL | CHANGED | | | | |
| SHAPE | | " | | | | |
| FINISH | CAD. PLATE | " | | | | |
| TEMP. | | " | | H. G. FISCHER & CO. 2335 WABANSIA AVE. CHICAGO, ILL. | CAT. NO. | PART NO. 8456 |
| PATT. | | " | | | | |

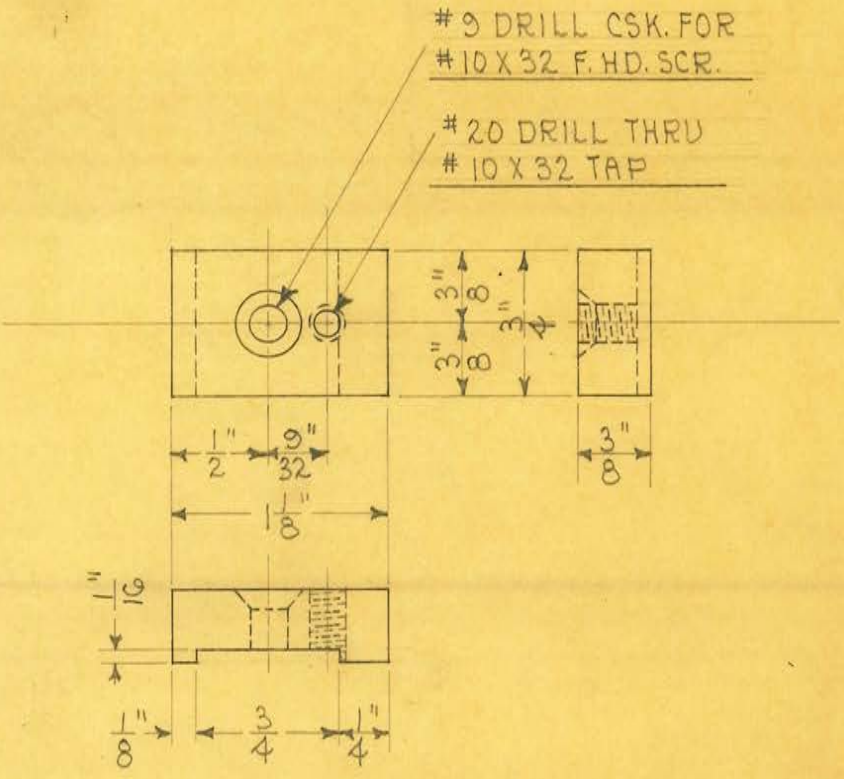


1 REQUIRED

OBSOLETE

OBSOLETE

| | | | | |
|---|---|---|---|---|
| SIZE | 3/8" X 3/4" | ISSUE 1-10-34 | A.E. | **TITLE:** FISCHER FLAT BUCKY LOCK LOCATING BLOCK |
| KIND | C.R. STEEL | CHANGED | | |
| SHAPE | | " | | |
| FINISH | CAD. PLATE | " | | |
| TEMP. | | " | | |
| PATT. | | " | | |

H. G. FISCHER & CO.
2335 WABANSIA AVE.
CHICAGO, ILL.

CAT. NO.

PART NO. 8457

THIS HOLE MUST MATCH UP WITH HOLE IS HOUSING WHEN #16 GA. STOCK IS PLACED BETWEEN BOTTOM OF ANGLE & BOTTOM (INSIDE) OF HOUSING.

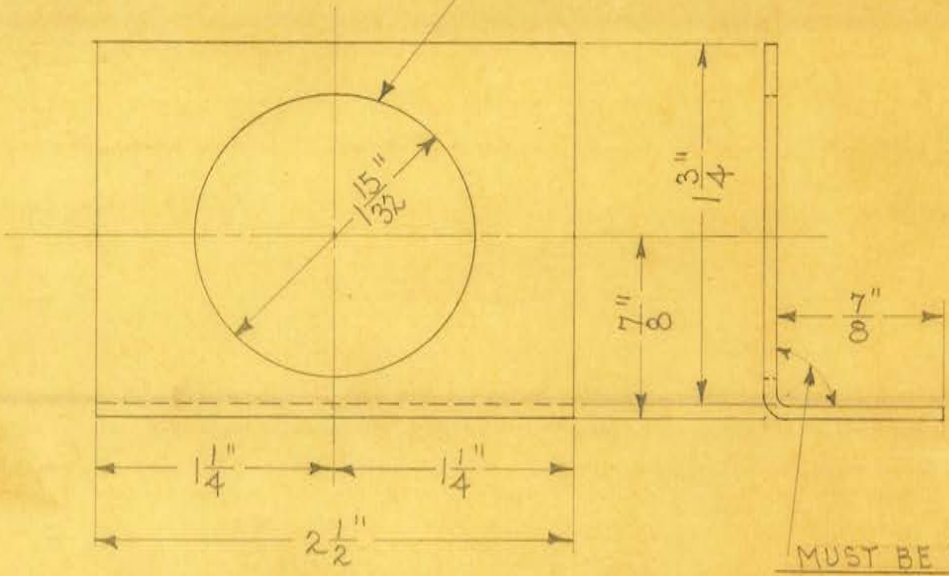


SCALE ÷ FULL SIZE

1 REQUIRED

OBSOLETE

| | | | |
|---|---|---|---|
| SIZE | #16 GA. (.0625") | ISSUE 11-23-33 | A.E. |
| KIND | SHEET STEEL | CHANGED | |
| SHAPE | | " | |
| FINISH | | " | |
| TEMP. | | " | |
| PATT. | | " | |

**TITLE:** FISCHER FLAT BUCKY RECEPTACLE MOUNTING ANGLE

H. G. FISCHER & CO.
2335 WABANSIA AVE.
CHICAGO, ILL.

CAT. NO.

PART NO. 8460

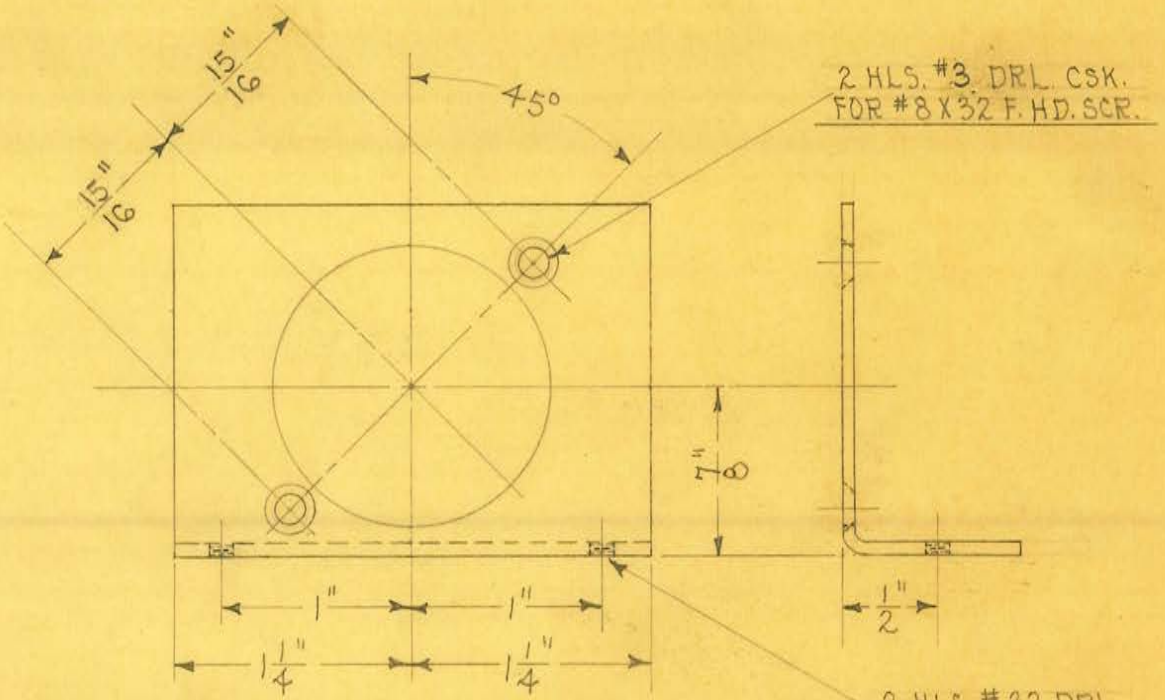


1 REQUIRED

DRILLED IN JIG #

OBSOLETE

| | | | | |
|---|---|---|---|---|
| SIZE | | ISSUE 11-28-33 | A E | **TITLE:** FISCHER FLAT BUCKY RECEPTACLE MOUNTING ANGLE (DRILLED) |
| KIND | | CHANGED | | |
| SHAPE | | " | | |
| FINISH | BLK. LACQUER | " | | |
| TEMP. | | " | | H. G. FISCHER & CO. 2335 WABANSIA AVE. CHICAGO, ILL. — CAT. NO. — PART NO. 8460F |
| PATT. | | " | | |

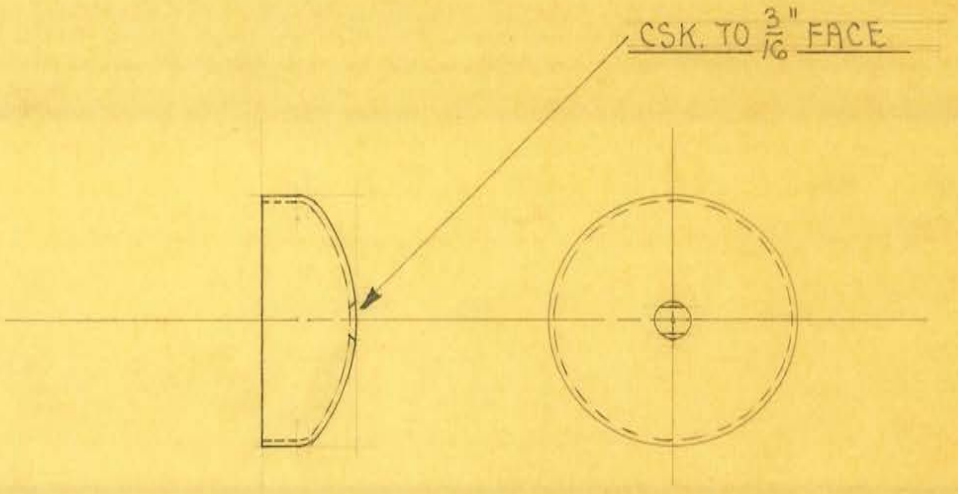


OBSOLETE

| | | | | | | |
|---|---|---|---|---|---|---|
| SIZE | | ISSUE 12-15-33 | 2nd E | TITLE: FISCHER FLAT BUCKY BELL | | |
| KIND | | CHANGED | | | | |
| SHAPE | | " | | | | |
| FINISH | | " | | | | |
| TEMP. | | " | | H. G. FISCHER & CO. 2335 WABANSIA AVE. CHICAGO, ILL. | CAT. NO. | PART NO. 8461F |
| PATT. | | " | | | | |

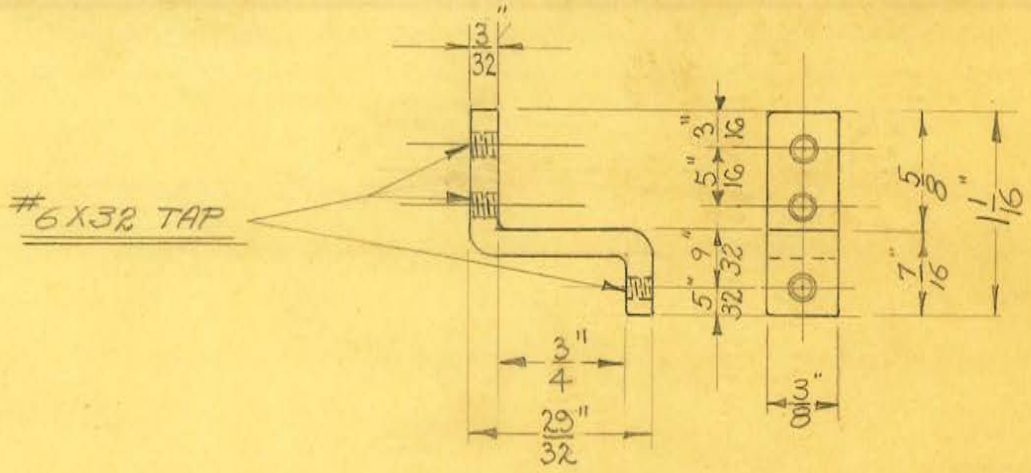


DEVELOPED LENGTH - 1 25/32"

1 REQUIRED

OBSOLETE

| | | | | | |
|---|---|---|---|---|---|
| SIZE | 3/32" X 3/8" | ISSUE 12-6-33 | N.P | TITLE: FISCHER FLAT BUCKY BELL MOUNTING BRACKET | |
| KIND | C.R. STEEL | CHANGED | | | |
| SHAPE | | " | | | |
| FINISH | CAD. PLATE | " | | | |
| TEMP. | | " | | | |
| PATT. | | " | | | |
| H. G. FISCHER & CO. 2335 WABANSIA AVE. CHICAGO, ILL. | | CAT. NO. | | PART NO. 8462 | |

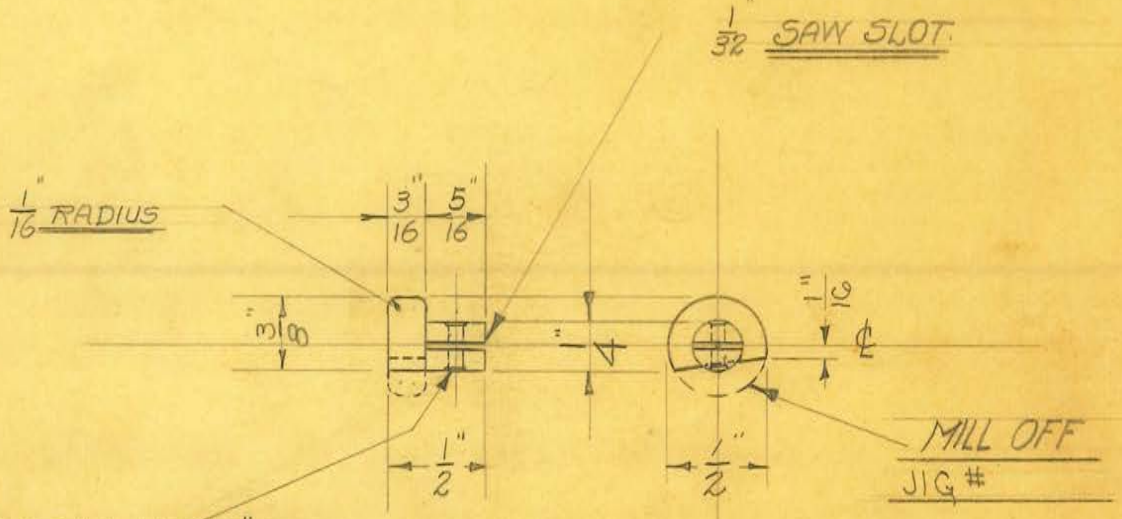


1 REQUIRED

OBSOLETE

| | | | | |
|---|---|---|---|---|
| SIZE | 1/2" ROD. | ISSUE 12-6-33 | N.P. | **TITLE:** FISCHER FLAT BUCKY BELL HAMMER |
| KIND | C.R. STEEL | CHANGED | | |
| SHAPE | | " | | |
| FINISH | | " | | |
| TEMP. | | " | | |
| PATT. | | " | | |

H. G. FISCHER & CO.
2335 WABANSIA AVE.
CHICAGO, ILL.

CAT. NO.

PART NO. 8463

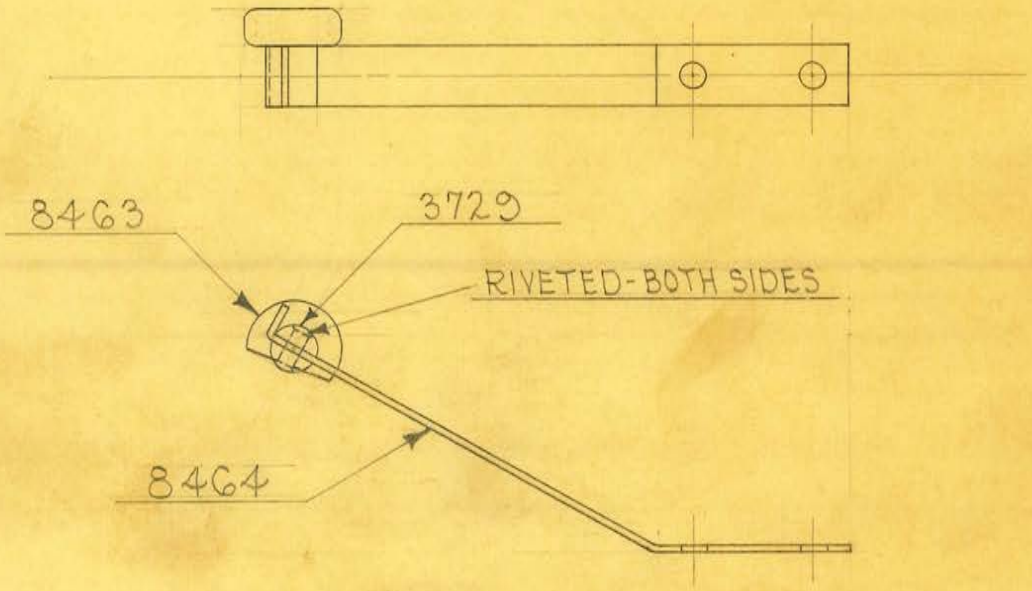


1 REQUIRED

OBSOLETE

| | | | | | | |
|---|---|---|---|---|---|---|
| SIZE | | ISSUE 7-31-34 | H.E. | TITLE: FISCHER FLAT BUCKY BELL HAMMER ASSEM. | | |
| KIND | | CHANGED | | | | |
| SHAPE | | " | | | | |
| FINISH | CADMIUM #23 | " | | | | |
| TEMP. | | " | | H. G. FISCHER & CO. 2335 WABANSIA AVE. CHICAGO, ILL. | CAT. NO. | PART NO. 8463G |
| PATT. | | " | | | | |

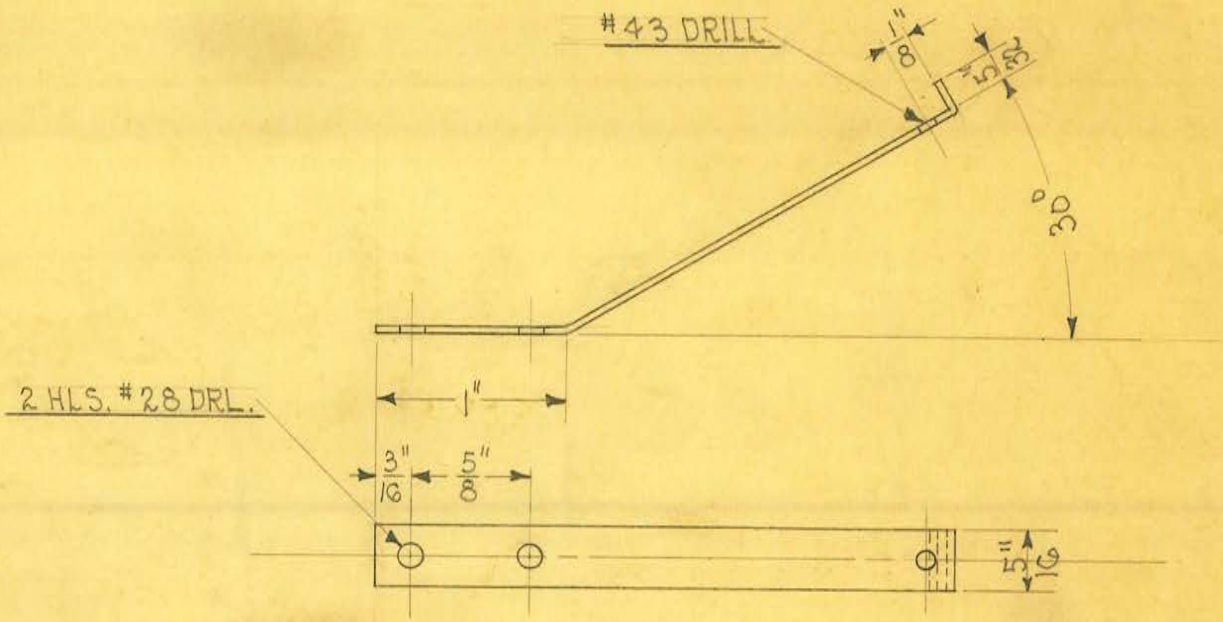


DEVELOPED LENGTH - 3 1/2"

1 REQUIRED

OBSOLETE

| | | | | |
|---|---|---|---|---|
| SIZE | #20 B.&S. GA. | ISSUE 12-27-33 | 2/6 | TITLE: FISCHER FLAT BUCKY BELL HAMMER ARM |
| KIND | PHOS. BRONZE | CHANGED | | |
| SHAPE | | " | | |
| FINISH | | " | | |
| TEMP. | | " | | |
| PATT. | | " | | |

H. G. FISCHER & CO.
2335 WABANSIA AVE.
CHICAGO, ILL.

CAT. NO.

PART NO. 8464

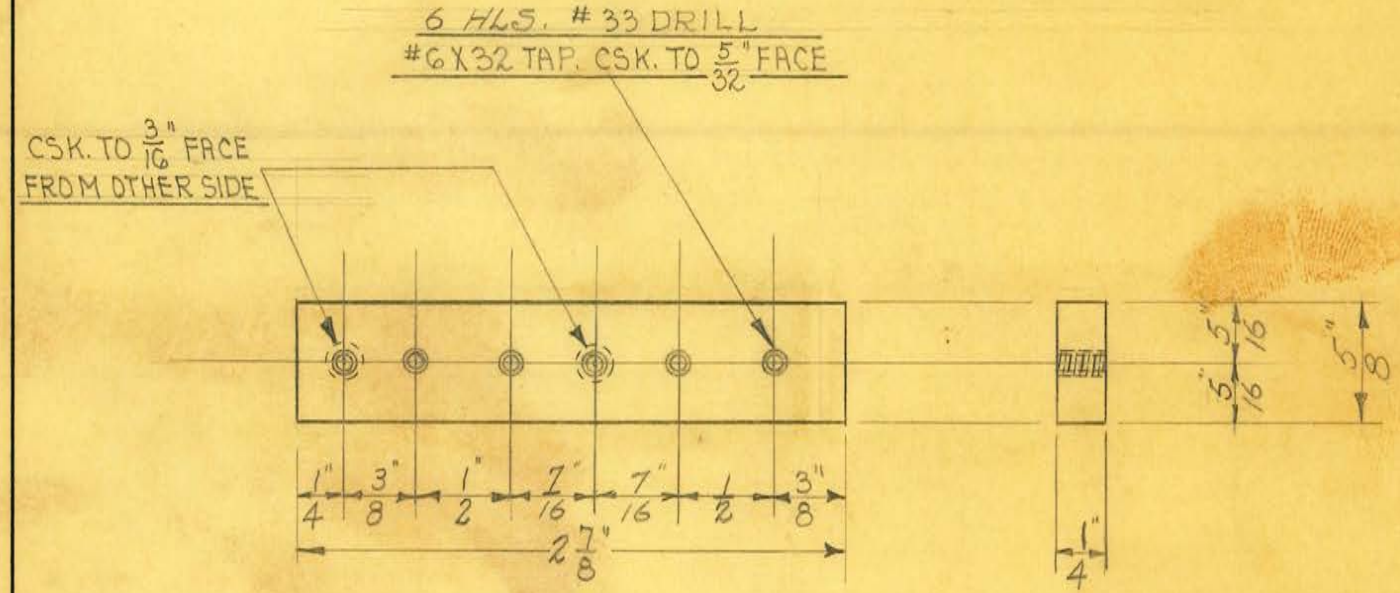


1 REQUIRED

OBSOLETE

| | | | |
|---|---|---|---|
| SIZE | 1/4 SHEET | ISSUE 11-4-33 | N.P |
| KIND | BAKELITE | CHANGED | |
| SHAPE | BLACK | " | |
| FINISH | | " | |
| TEMP. | | " | |
| PATT. | | " | |

**TITLE:** FISCHER FLAT BUCKY SWITCH MOUNTING STRIP

H. G. FISCHER & CO.
2335 WABANSIA AVE.
CHICAGO, ILL.

CAT. NO.

PART NO. 8465

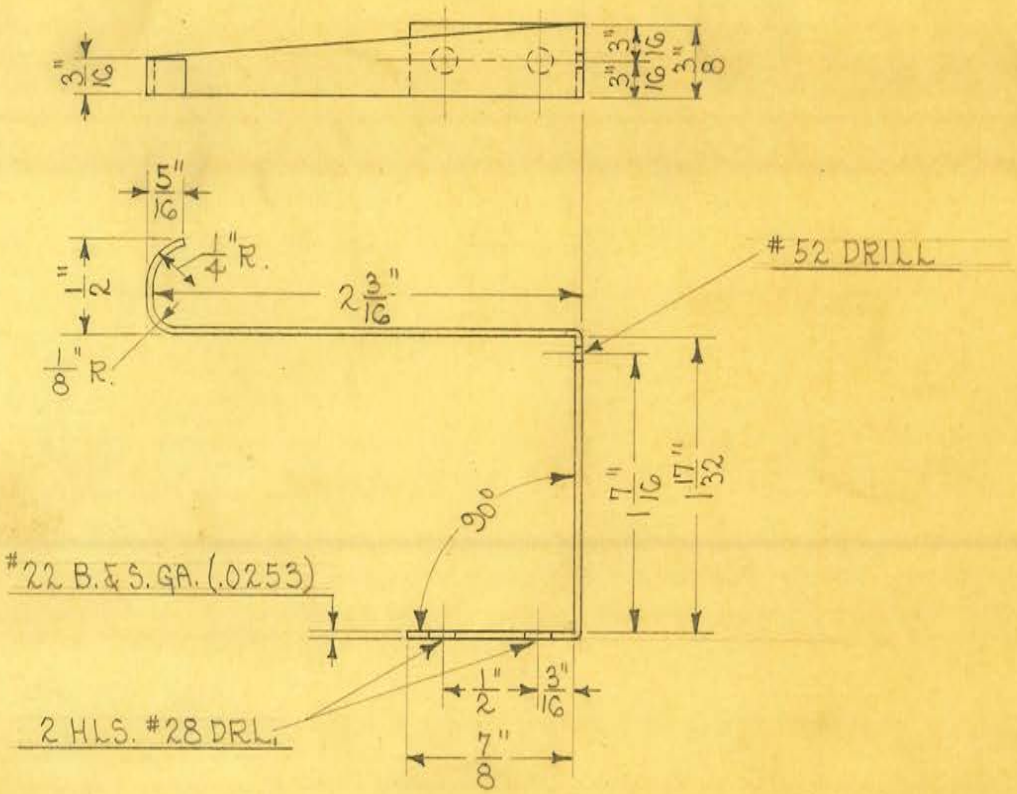


1 REQUIRED

DEVELOPED LENGTH - 5 1/4"

OBSOLETE

| | | | |
|---|---|---|---|
| SIZE | #22 B.&S. GA. | ISSUE 12-22-33 | D.E. |
| KIND | PHOS. BRONZE | CHANGED | |
| SHAPE | | " | |
| FINISH | | " | |
| TEMP. | | " | |
| PATT. | | " | |

**TITLE:** FISCHER FLAT BUCKY SWITCH CONTACT SPRING-LONG

H. G. FISCHER & CO.
2335 WABANSIA AVE.
CHICAGO, ILL.

CAT. NO.

PART NO. 8467

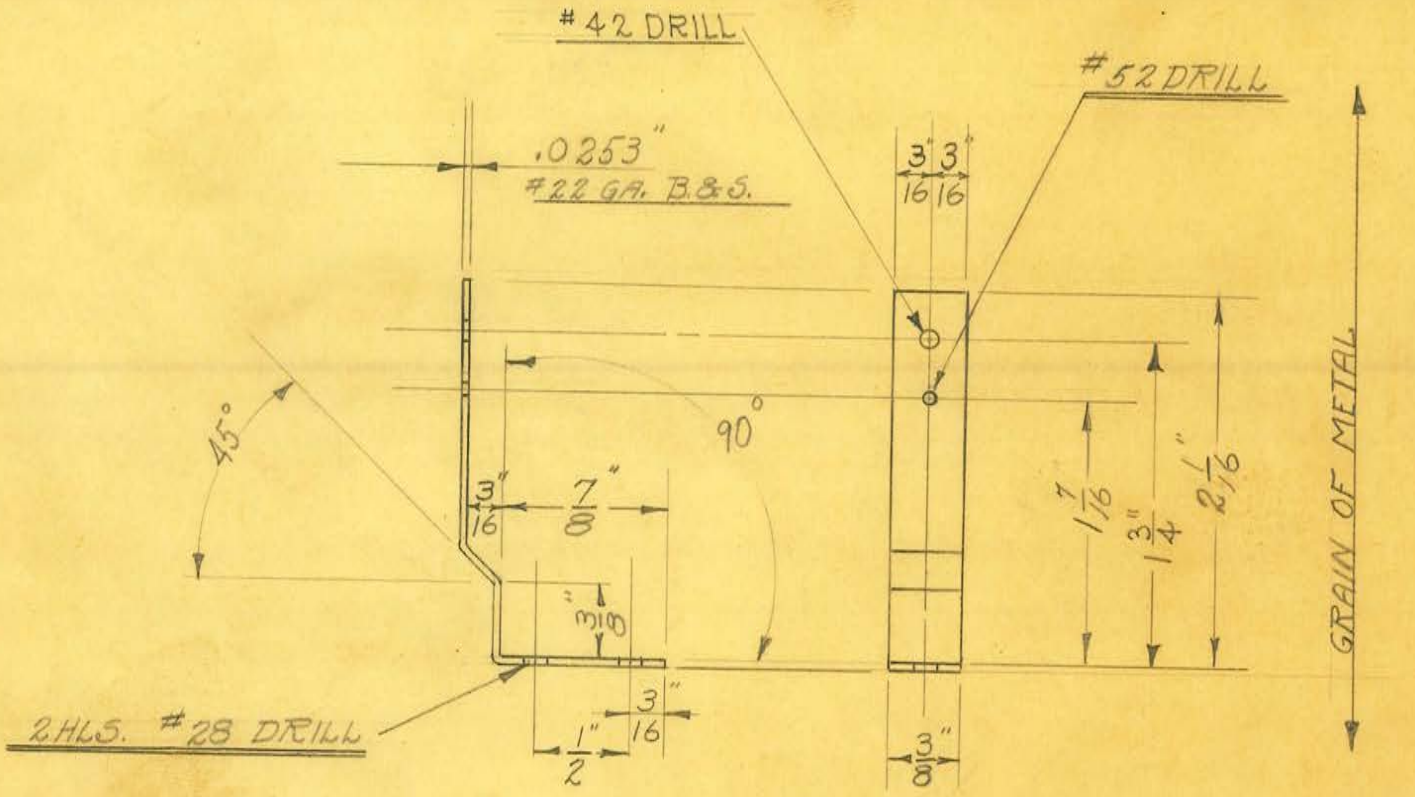


DRILL JIG # 3582

FORMING FIXTURE # 3583

"NOTE"

TO BE MADE UP FROM STRIPS CUT TO 3" LONG

1 REQUIRED

OBSOLETE

(.0253")

| | | | |
|---|---|---|---|
| SIZE | 22 GA. B.&S. | ISSUE 11-4-33 | N.P. |
| KIND | PHOS. BRZE | CHANGED | |
| SHAPE | | " | |
| FINISH | | " | |
| TEMP. | | " | |
| PATT. | | " | |

**TITLE:** FISCHER FLAT BUCKY SWITCH CONTACT SPRING - SHORT

H. G. FISCHER & CO.
2335 WABANSIA AVE.
CHICAGO, ILL.

CAT. NO.

PART NO. 8468

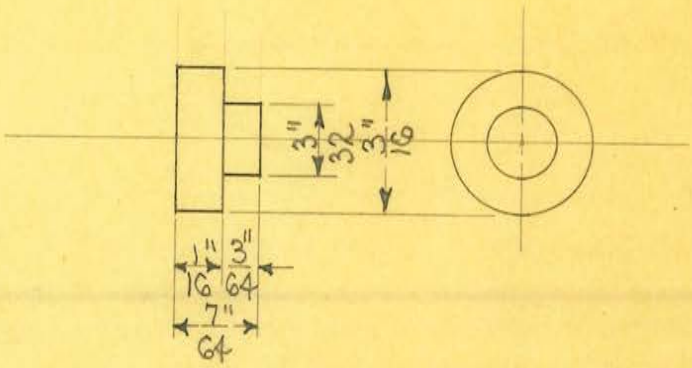


SCALE ~ 4 DIAMETERS

1 REQUIRED

OBSOLETE

| | | | |
|---|---|---|---|
| SIZE | 3/16" | ISSUE 2-15-34 | 7/8. |
| KIND | BRASS ROD | CHANGED | |
| SHAPE | | " | |
| FINISH | | " | |
| TEMP. | | " | |
| PATT. | | " | |

**TITLE:** FISCHER FLAT BUCKY SWITCH CONTACT SPRING STUD

H. G. FISCHER & CO.
2335 WABANSIA AVE.
CHICAGO, ILL.

CAT. NO.

PART NO. 8468 1/2

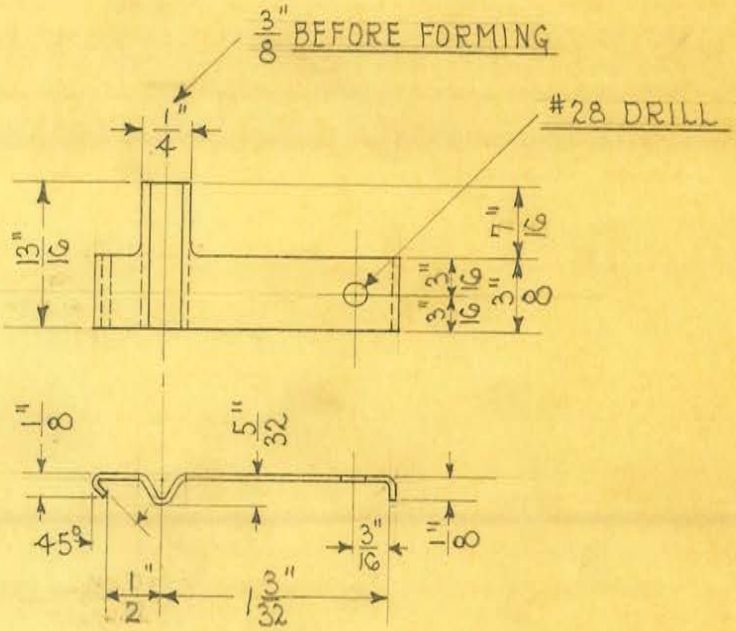


DEVELOPED LENGTH - 2"

1 REQUIRED

OBSOLETE

(.020")

| | | | |
|---|---|---|---|
| SIZE | #24 B.&S. GA. | ISSUE 1-27-34 | A.E. |
| KIND | PHOS. BRONZE | CHANGED | |
| SHAPE | | " | |
| FINISH | | " | |
| TEMP. | | " | |
| PATT. | | " | |

**TITLE:** FISCHER FLAT BUCKY SWITCH CONTACT SPRING CATCH

H. G. FISCHER & CO.
2335 WABANSIA AVE.
CHICAGO, ILL.

CAT. NO.

PART NO. 8469

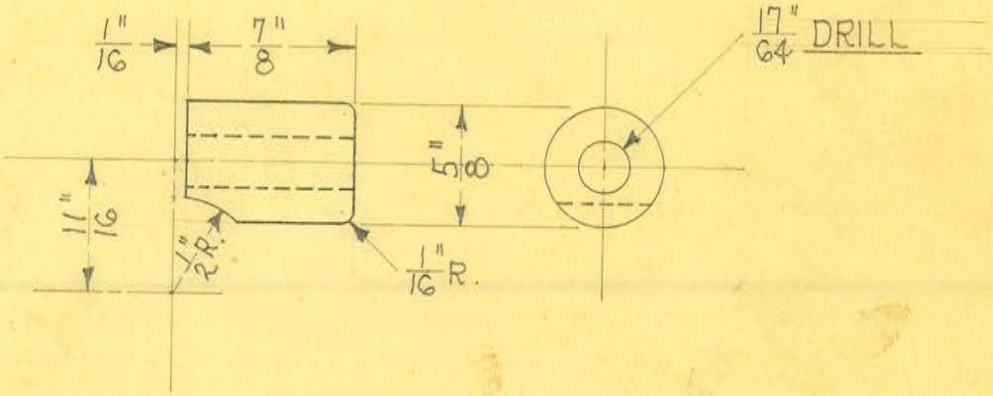


1 REQUIRED

OBSOLETE

| | | | |
|---|---|---|---|
| SIZE | 5/8" | ISSUE 7-10-35 | A.E. |
| KIND | BRASS ROD | CHANGED | |
| SHAPE | | " | |
| FINISH | CAD. # 23 | " | |
| TEMP. | | " | |
| PATT. | | " | |

**TITLE:** MODEL "SP-60" SHOCKPROOF RAD. UNIT TUBE HEAD SWIVEL FRICTION LOCK PIECE - FRONT

H. G. FISCHER & CO.
2335 WABANSIA AVE.
CHICAGO, ILL.

CAT. NO.

PART NO. 9724

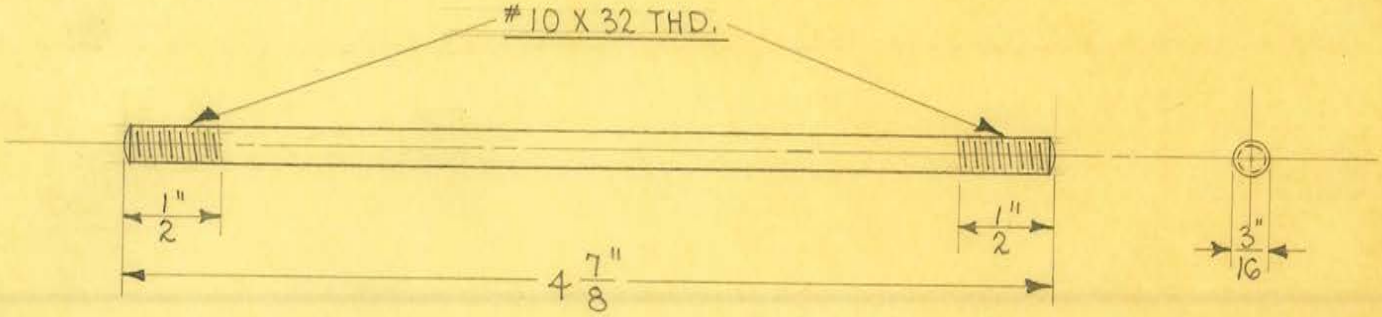


4 REQUIRED

OBSOLETE

| | | | |
|---|---|---|---|
| SIZE | 3/16" DIAM. | ISSUE 4-4-36 | A.E. |
| KIND | BRASS ROD | CHANGED | |
| SHAPE | | " | |
| FINISH | | " | |
| TEMP. | | " | |
| PATT. | | " | |

**TITLE:** MODEL "SP-60" SHOCKPROOF RAD. UNIT CONTROL BOX RESISTOR MTG. STUD

H. G. FISCHER & CO.
2335 WABANSIA AVE.
CHICAGO, ILL.

CAT. NO.

PART NO. 9724 1/2

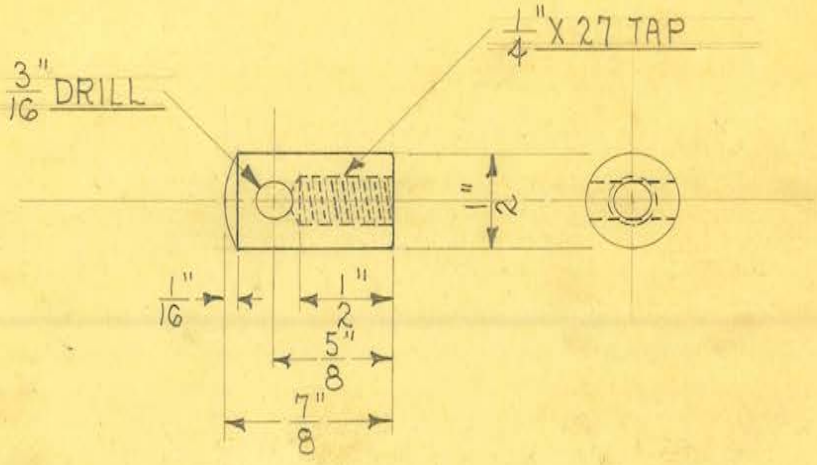


1 REQUIRED

OBSOLETE

| | | | |
|---|---|---|---|
| SIZE | 1/2" | ISSUE 7-11-35 | A.E. |
| KIND | BRASS ROD | CHANGED | |
| SHAPE | | " | |
| FINISH | | " | |
| TEMP. | | " | |
| PATT. | | " | |

**TITLE:** MODEL "SP-60" SHOCKPROOF RAD. UNIT TUBE HEAD SWIVEL FRICTION LOCK NUT

H. G. FISCHER & CO.
2335 WABANSIA AVE.
CHICAGO, ILL.

CAT. NO.

PART NO. 9725

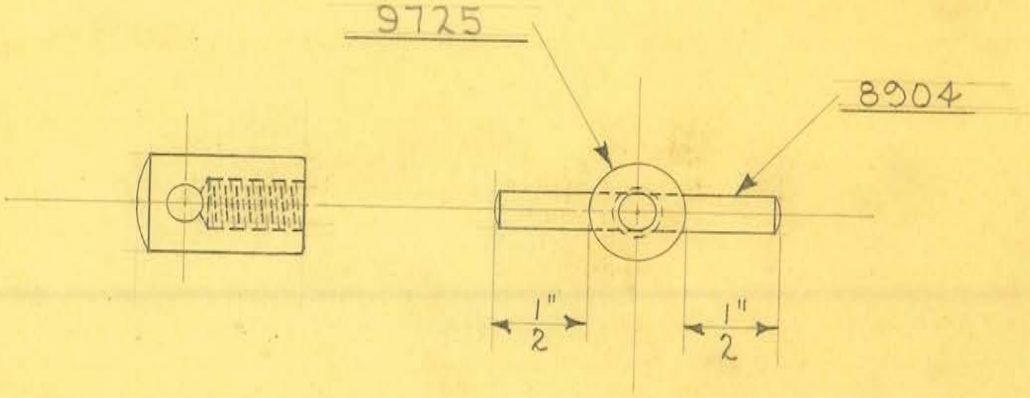


1 REQUIRED

OBSOLETE

| | | | |
|---|---|---|---|
| SIZE | | ISSUE 7-11-35 | A.E. |
| KIND | | CHANGED | |
| SHAPE | | " | |
| FINISH | CAD. PLATE | " | |
| TEMP. | | " | |
| PATT. | | " | |

**TITLE:** MODEL "SP-60" SHOCKPROOF RAD. UNIT TUBE HEAD SWIVEL FRICTION LOCK NUT ASSEM.

H. G. FISCHER & CO.
2335 WABANSIA AVE.
CHICAGO, ILL.

CAT. NO.

PART NO. 9726G

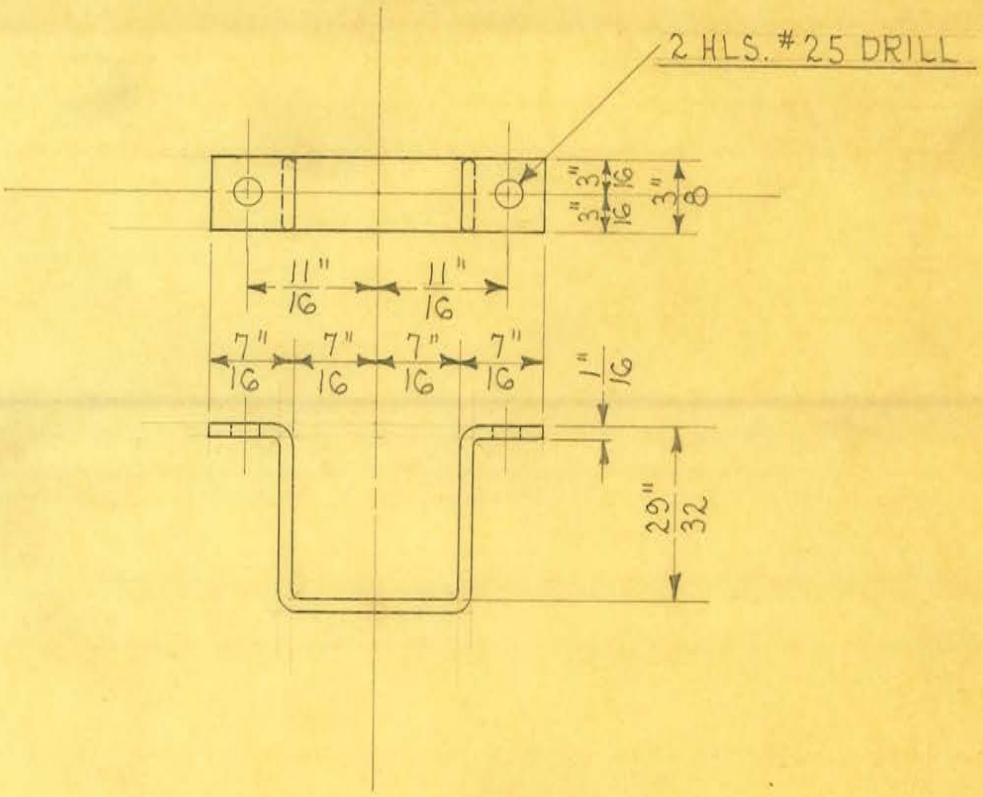


1 REQUIRED

DEVELOPED LENGTH - 3 15/32"

OBSOLETE

| | | | |
|---|---|---|---|
| SIZE | 3/8" X 1/16" | ISSUE 4-8-36 | A/E. |
| KIND | FLAT WIRE | CHANGED | |
| SHAPE | | " | |
| FINISH | | " | |
| TEMP. | | " | |
| PATT. | | " | |

**TITLE:** MODEL "SP-60" SHOCKPROOF RAD. UNIT
PILOT LIGHT CLAMP STRAP

OBSOLETE

H. G. FISCHER & CO.
2335 WABANSIA AVE.
CHICAGO, ILL.

CAT. NO.

PART NO. 9726 1/2

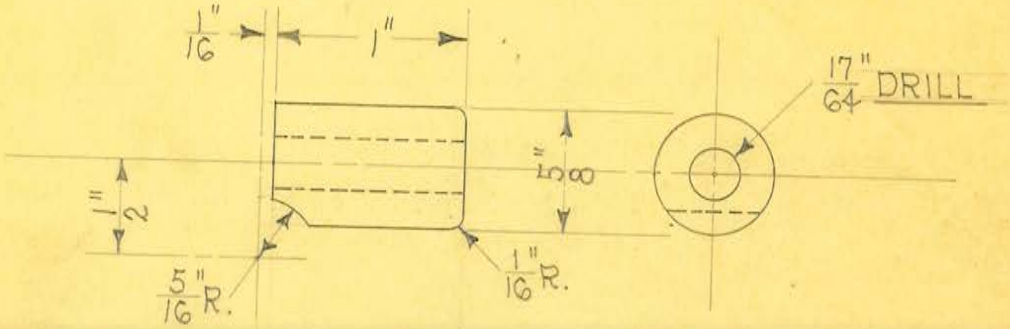


1 REQUIRED

OBSOLETE

| | | | |
|---|---|---|---|
| SIZE | 5/8" | ISSUE 7-25-35 | 2.26. |
| KIND | BRASS ROD | CHANGED | |
| SHAPE | | " | |
| FINISH | CAD. #23 | " | |
| TEMP. | | " | |
| PATT. | | " | |

**TITLE:** MODEL "SP-60" SHOCKPROOF RAD. UNIT SLIDE FRICTION LOCK PIECE - FRONT

H. G. FISCHER & CO.
2335 WABANSIA AVE.
CHICAGO, ILL.

CAT. NO.

PART NO. 9727

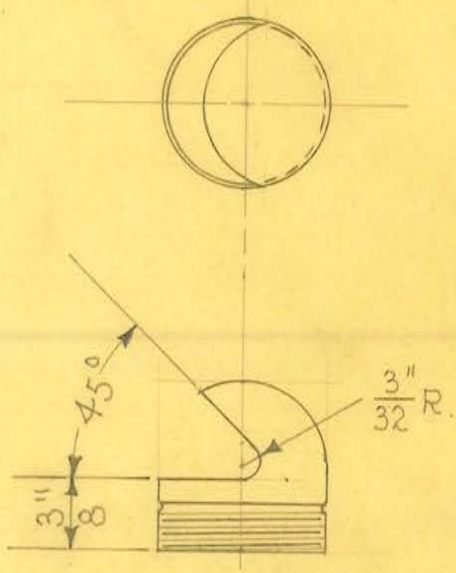


1 REQUIRED

OBSOLETE

| | | | |
|---|---|---|---|
| SIZE | | ISSUE 5-5-36 | A.E. |
| KIND | | CHANGED | |
| SHAPE | | " | |
| FINISH | CHROME #2 | " | |
| TEMP. | | " | |
| PATT. | | " | |

**TITLE:** MODEL "SP-60" SHOCKPROOF RAD. UNIT CONTROL BOX PILOT LIGHT CAP

H. G. FISCHER & CO.
2335 WABANSIA AVE.
CHICAGO, ILL.

CAT. NO.

PART NO. 9727 3/4 F

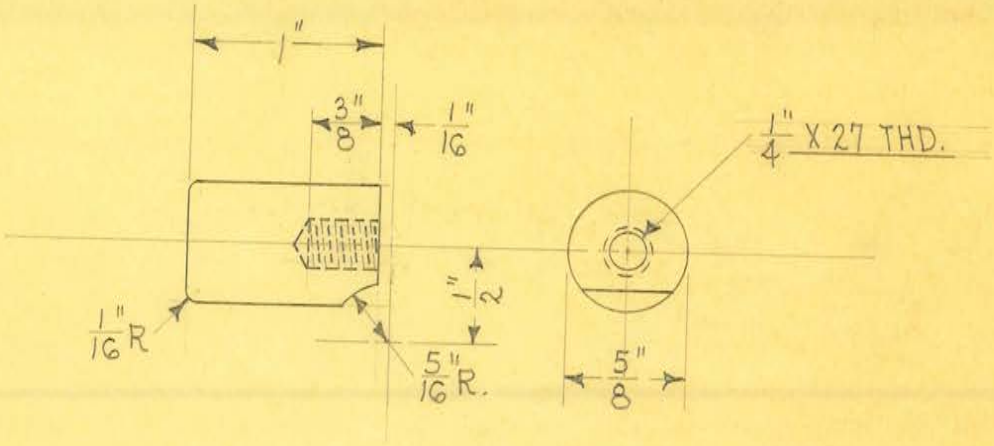


1 REQUIRED

OBSOLETE

| | | | | |
|---|---|---|---|---|
| SIZE | 5/8" | ISSUE 7-25-35 | H.E. | TITLE: MODEL "SP-GO" SHOCKPROOF RAD. UNIT SLIDE FRICTION LOCK PIECE - REAR |
| KIND | BRASS ROD | CHANGED | | |
| SHAPE | | " | | |
| FINISH | CAD. #23 | " | | |
| TEMP. | | " | | |
| PATT. | | " | | |

H. G. FISCHER & CO.
2335 WABANSIA AVE.
CHICAGO, ILL.

CAT. NO.

PART NO. 9728

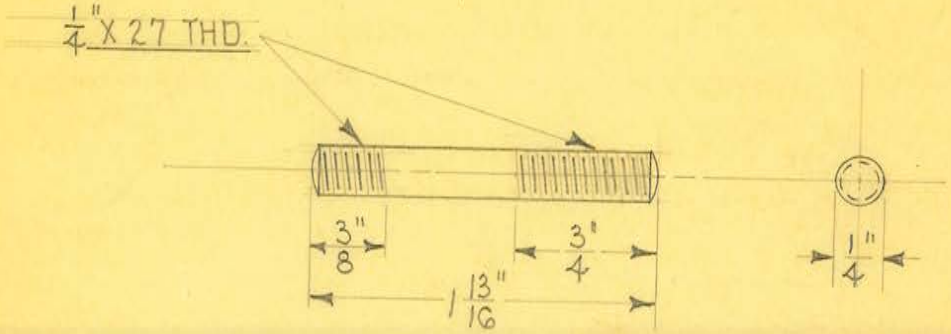


1 REQUIRED

OBSOLETE

| | | | |
|---|---|---|---|
| SIZE | 1/4" | ISSUE 7-25-35 | A.E. |
| KIND | BRASS ROD | CHANGED | |
| SHAPE | | " | |
| FINISH | CAD. # 23 | " | |
| TEMP. | | " | |
| PATT. | | " | |

**TITLE:** MODEL "SP-60" SHOCKPROOF RAD. UNIT SLIDE FRICTION LOCK STUD

H. G. FISCHER & CO.
2335 WABANSIA AVE.
CHICAGO, ILL.

CAT. NO.

PART NO. 9729

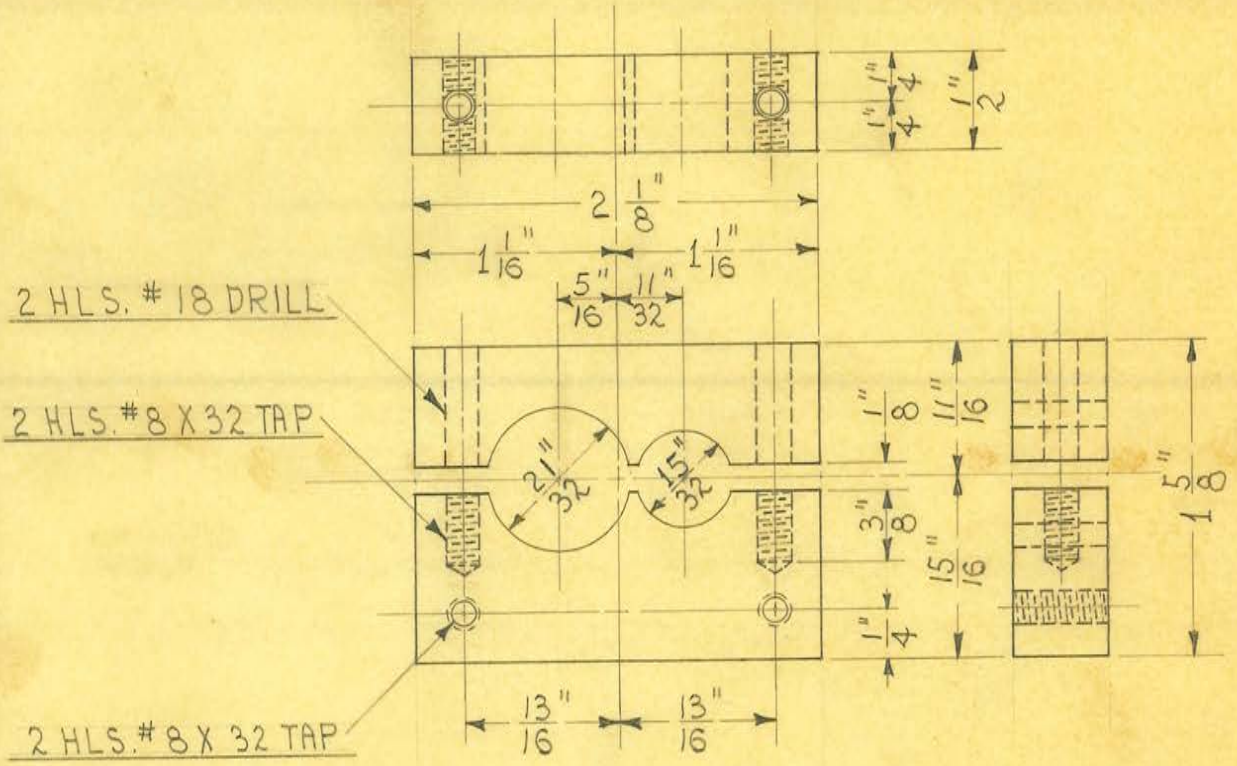


1 REQUIRED

OBSOLETE

| | | | |
|---|---|---|---|
| SIZE | 1/2" SHEET | ISSUE 12-3-37 | A.E. |
| KIND | RICHELAIN | CHANGED | |
| SHAPE | BAKELITE | " | |
| FINISH | | " | |
| TEMP. | | " | |
| PATT. | | " | |

**TITLE:** MODEL "SP-60" SHOCKPROOF RAD. UNIT TRANSFORMER CORD STRAIN RELIEF

H. G. FISCHER & CO.
2335 WABANSIA AVE.
CHICAGO, ILL.

CAT. NO.

PART NO. 9729 1/2

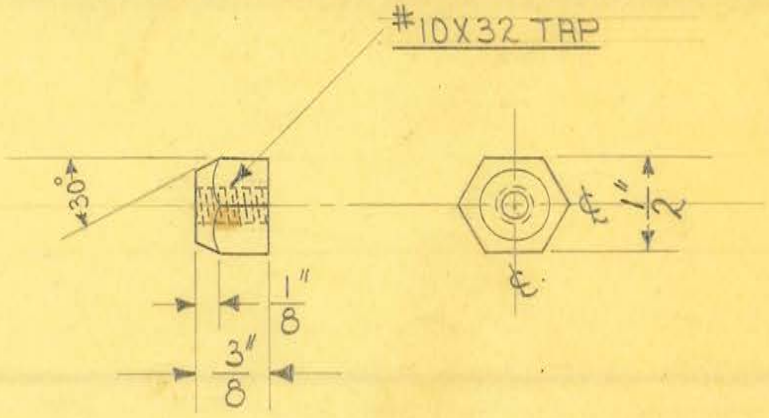


4 REQUIRED

OBSOLETE

| | | | | |
|---|---|---|---|---|
| SIZE | 1/2" HEX. | ISSUE 8-8-35 | J.W. | TITLE: MOD. "SP-GO" SHOCKPROOF RAD. UNIT TRANSFORMER COVER SPACER |
| KIND | BRASS ROD | CHANGED | | |
| SHAPE | | " | | |
| FINISH | | " | | |
| TEMP. | | " | | |
| PATT. | | " | | |

H. G. FISCHER & CO.
2335 WABANSIA AVE.
CHICAGO, ILL.

CAT. NO.

PART NO. 9733

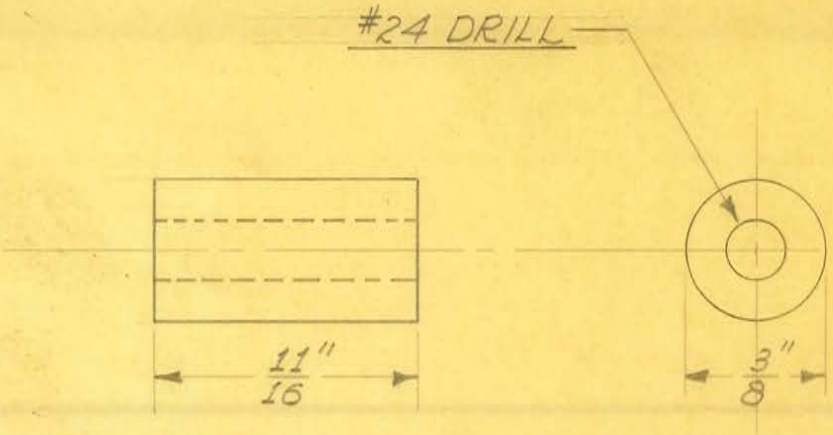


4 REQUIRED

SCALE - 2 DIAM.

OBSOLETE

| | | | |
|---|---|---|---|
| SIZE | 3/8" DIAM. | ISSUE 8-10-36 | J.W. |
| KIND | BRASS-ROD | CHANGED | |
| SHAPE | | " | |
| FINISH | | " | |
| TEMP. | | " | |
| PATT. | | " | |

**TITLE:** MOD. "SP-60" SHOCKPROOF RAD. UNIT RHEOSTAT SPACER

| | | |
|---|---|---|
| H. G. FISCHER & CO. 2338 WABANSIA AVE. CHICAGO, ILL. | CAT. NO. | PART NO. 9733 1/2 |

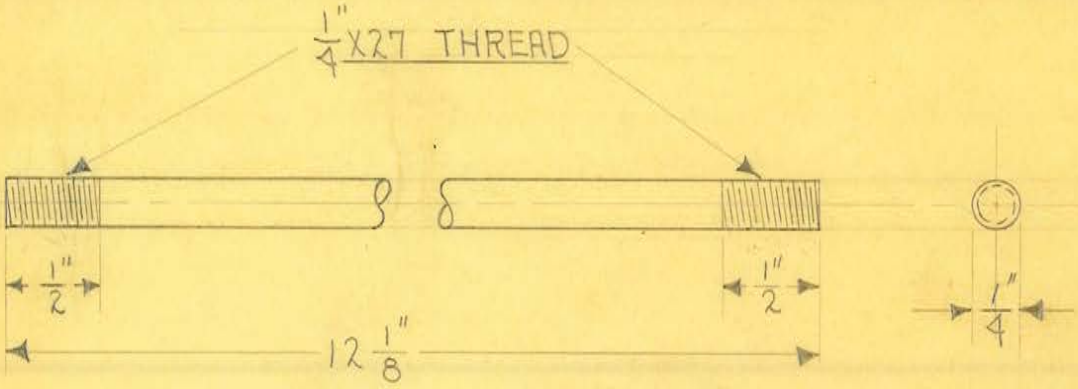


2 REQUIRED

OBSOLETE

| | | | |
|---|---|---|---|
| SIZE | 1/4" C.R.S. ROD. | ISSUE 8-6-35 | J.W. |
| KIND | | CHANGED | |
| SHAPE | | " | |
| FINISH | CAD. #23 | " | |
| TEMP. | | " | |
| PATT. | | " | |

**TITLE:** MOD. "SP-GO" SHOCKPROOF RAD. UNIT TRANSFORMER TIE ROD

H. G. FISCHER & CO.
2335 WABANSIA AVE.
CHICAGO, ILL.

CAT. NO.

PART NO. 9734

#24 DRILL

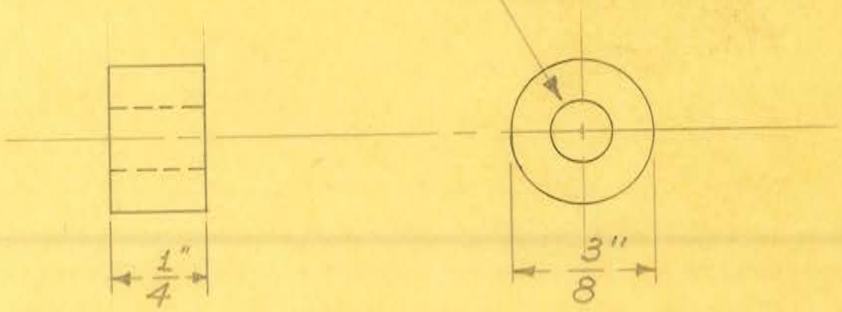


SCALE - 2 DIAM.

8 REQUIRED

OBSOLETE

| | | | | |
|---|---|---|---|---|
| SIZE | 3/8" DIAM. | ISSUE 8-10-36 | J.W. | TITLE: MOD. "SP-60" SHOCKPROOF RAD. UNIT 5 & 9 POINT SWITCH SPACER |
| KIND | BRASS ROD. | CHANGED | | |
| SHAPE | | " | | |
| FINISH | | " | | |
| TEMP. | | " | | |
| PATT. | | " | | |

H. G. FISCHER & CO.
2335 WABANSIA AVE.
CHICAGO, ILL.

CAT. NO.

PART NO. 9734 1/2

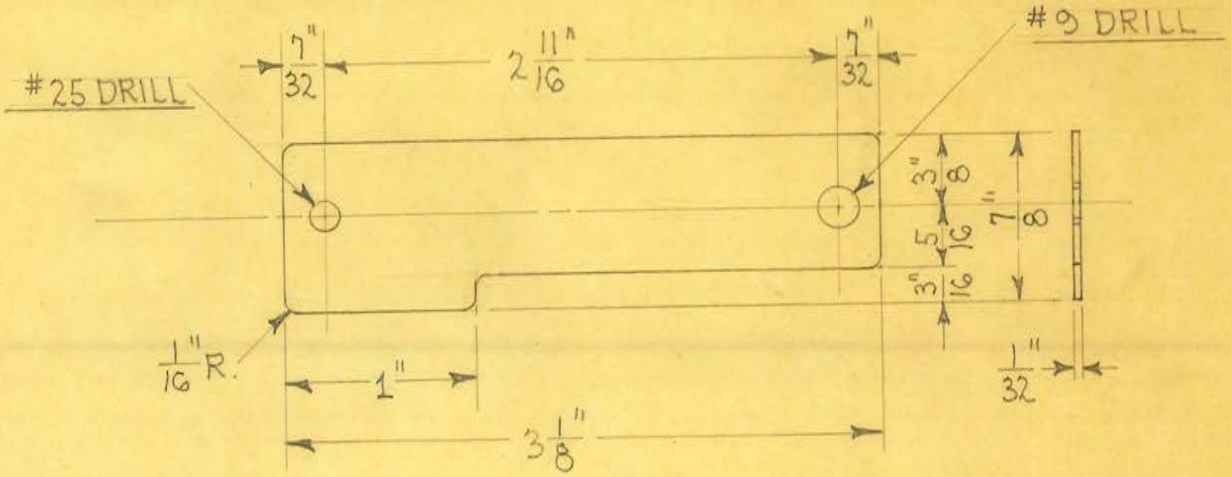


2 REQUIRED

OBSOLETE

| | | | |
|---|---|---|---|
| SIZE | 1/32" SHEET | ISSUE 12-23-35 | J.E. |
| KIND | FIBROC (BLACK) | CHANGED | |
| SHAPE | | " | |
| FINISH | | " | |
| TEMP. | | " | |
| PATT. | | " | |

**TITLE:** MODEL "SP-GO" CONTROL BOX
10 POINT SWITCH INSULATING STRIP

H. G. FISCHER & CO.
2335 WABANSIA AVE.
CHICAGO, ILL.

CAT. NO.

PART NO. 9736 1/2

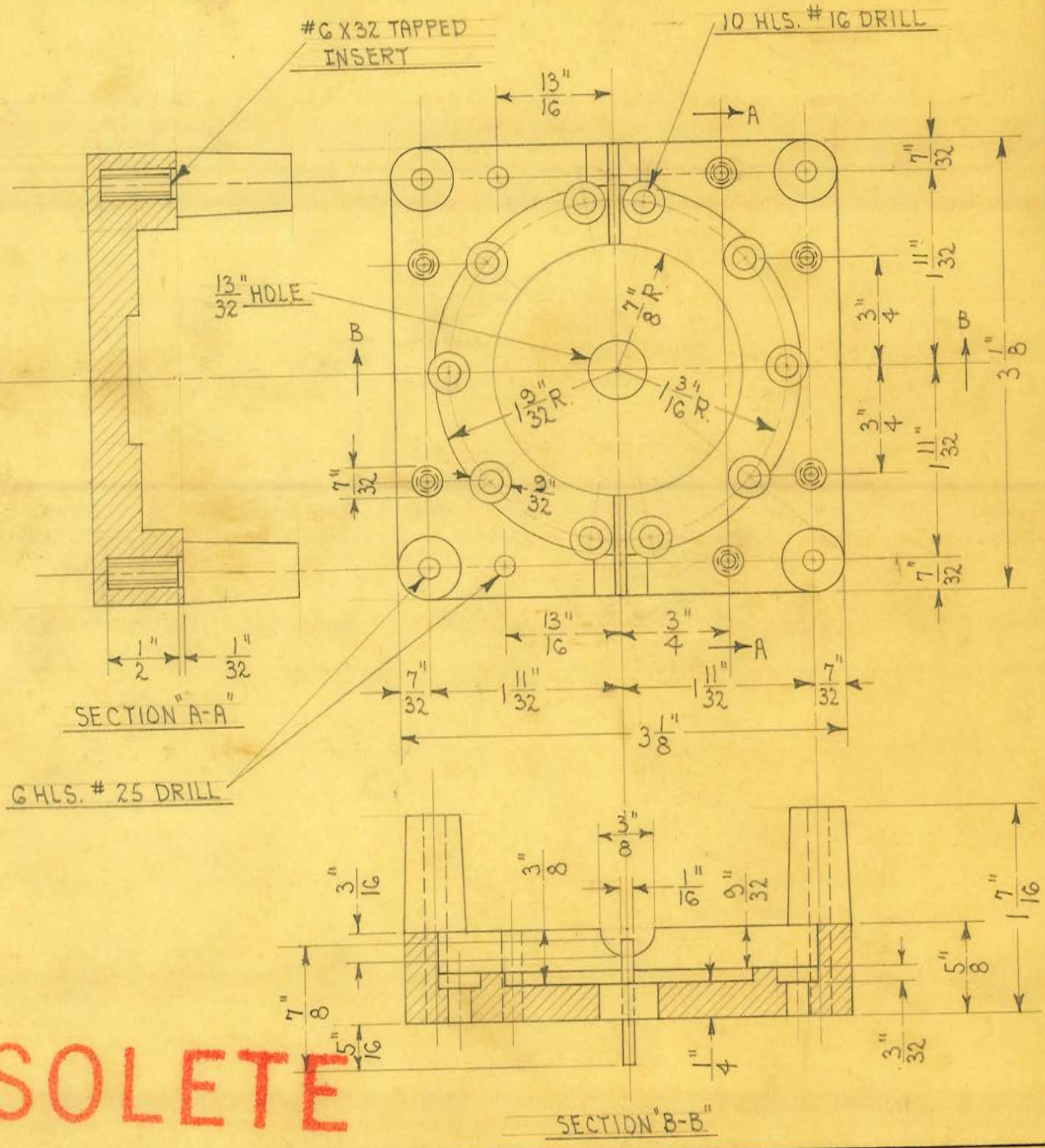


OBSOLETE

| | | | |
|---|---|---|---|
| SIZE | | ISSUE 12-21-35 | J.H.E. |
| KIND | MOLDED BAKELITE | CHANGED | |
| SHAPE | | " | |
| FINISH | | " | |
| TEMP. | | " | |
| PATT. | | " | |

**TITLE:** MODEL "SP-60" CONTROL BOX
10 POINT SWITCH BASE

H. G. FISCHER & CO.
2335 WABANSIA AVE.
CHICAGO, ILL.

CAT. NO.

PART NO. 9737 1/2 G

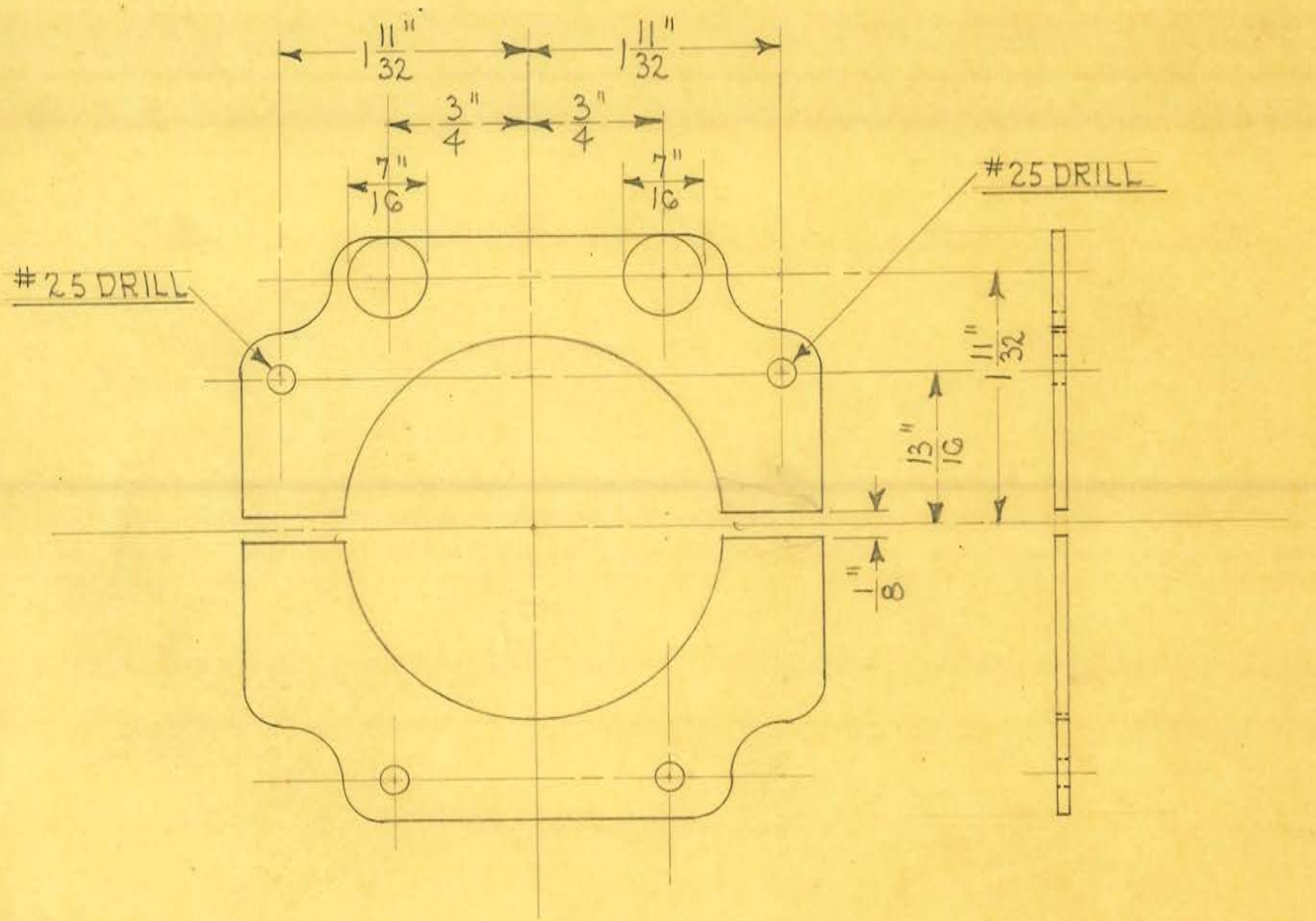


FROM 2243 1/4

OBSOLETE

| | | | | |
|---|---|---|---|---|
| SIZE | | ISSUE 12-23-35 | J.E. | TITLE: MODEL "SP-60" CONTROL BOX<br>10 POINT SWITCH CONTACT RING-SET |
| KIND | | CHANGED | | |
| SHAPE | | " | | |
| FINISH | | " | | |
| TEMP. | | " | | |
| PATT. | | " | | |

H. G. FISCHER & CO.
2335 WABANSIA AVE.
CHICAGO, ILL.

CAT. NO.

PART NO. 9738 1/2

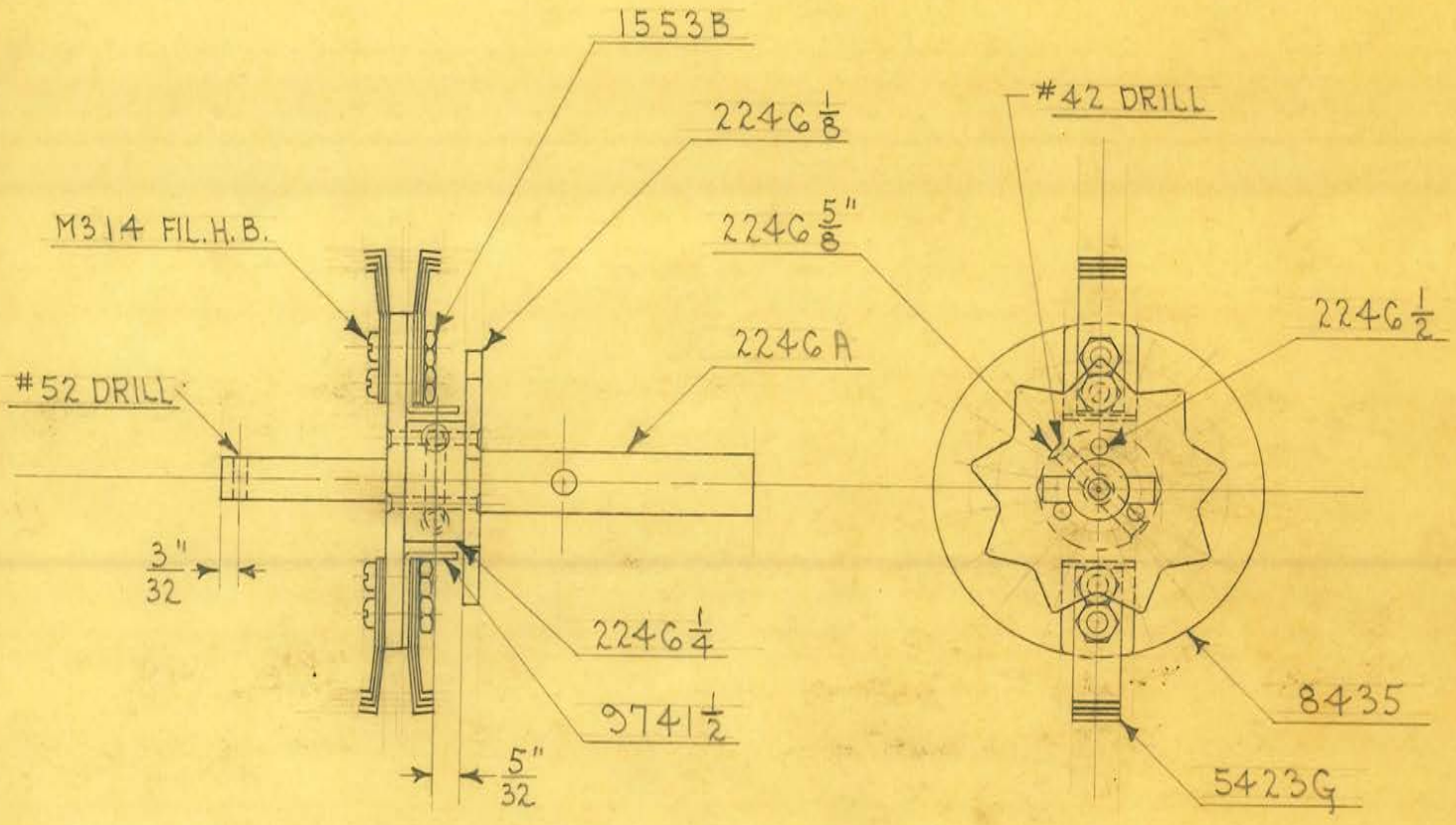


OBSOLETE

| | | | |
|---|---|---|---|
| SIZE | | ISSUE 12-23-35 | A.E. |
| KIND | | CHANGED | |
| SHAPE | | " | |
| FINISH | | " | |
| TEMP. | | " | |
| PATT. | | " | |

**TITLE:** MODEL "SP-60" CONTROL BOX
10 POINT SWITCH SHAFT ASSEMBLY

| | | |
|---|---|---|
| H. G. FISCHER & CO. 2335 WABANSIA AVE. CHICAGO, ILL. | CAT. NO. | PART NO. 9739 1/2 G |

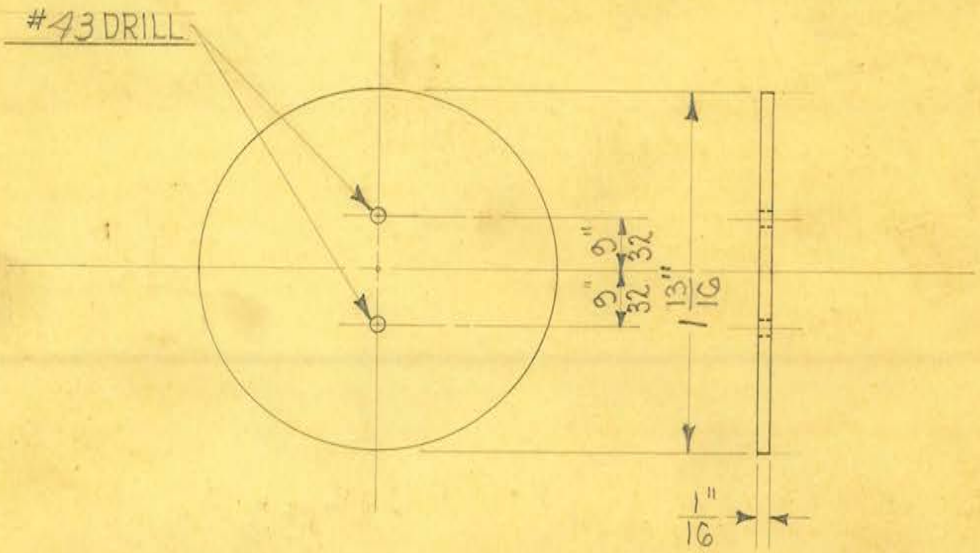


2 REQUIRED

OBSOLETE

| | | | |
|---|---|---|---|
| SIZE | 1/16" SHEET | ISSUE 7-26-35 | A.E. |
| KIND | FIBROC | CHANGED 8-14-36 | J.W. |
| SHAPE | | " | |
| FINISH | | " | |
| TEMP. | | " | |
| PATT. | | " | |

**TITLE:** MODEL "SP-60" SHOCKPROOF RAD. UNIT
HIGH TENSION CABLE TIP HOLDER WASHER

H. G. FISCHER & CO.
2335 WABANSIA AVE.
CHICAGO, ILL.

CAT. NO.

PART NO. 9741A

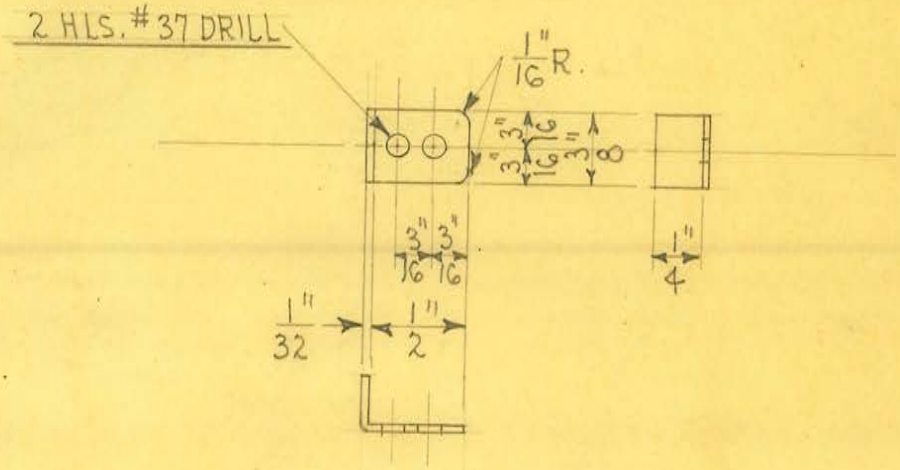


2 REQUIRED

OBSOLETE

| | | | | |
|---|---|---|---|---|
| SIZE | 1/32" | ISSUE 12-23-35 | A.E. | TITLE: MODEL "SP-60" CONTROL BOX<br>10 POINT SWITCH CONTACT INSULATING STRIP |
| KIND | SHEET FIBRE | CHANGED | | |
| SHAPE | | " | | |
| FINISH | | " | | |
| TEMP. | | " | | |
| PATT. | | " | | |

H. G. FISCHER & CO.
2335 WABANSIA AVE.
CHICAGO, ILL.

CAT. NO.

PART NO. 9741 1/2

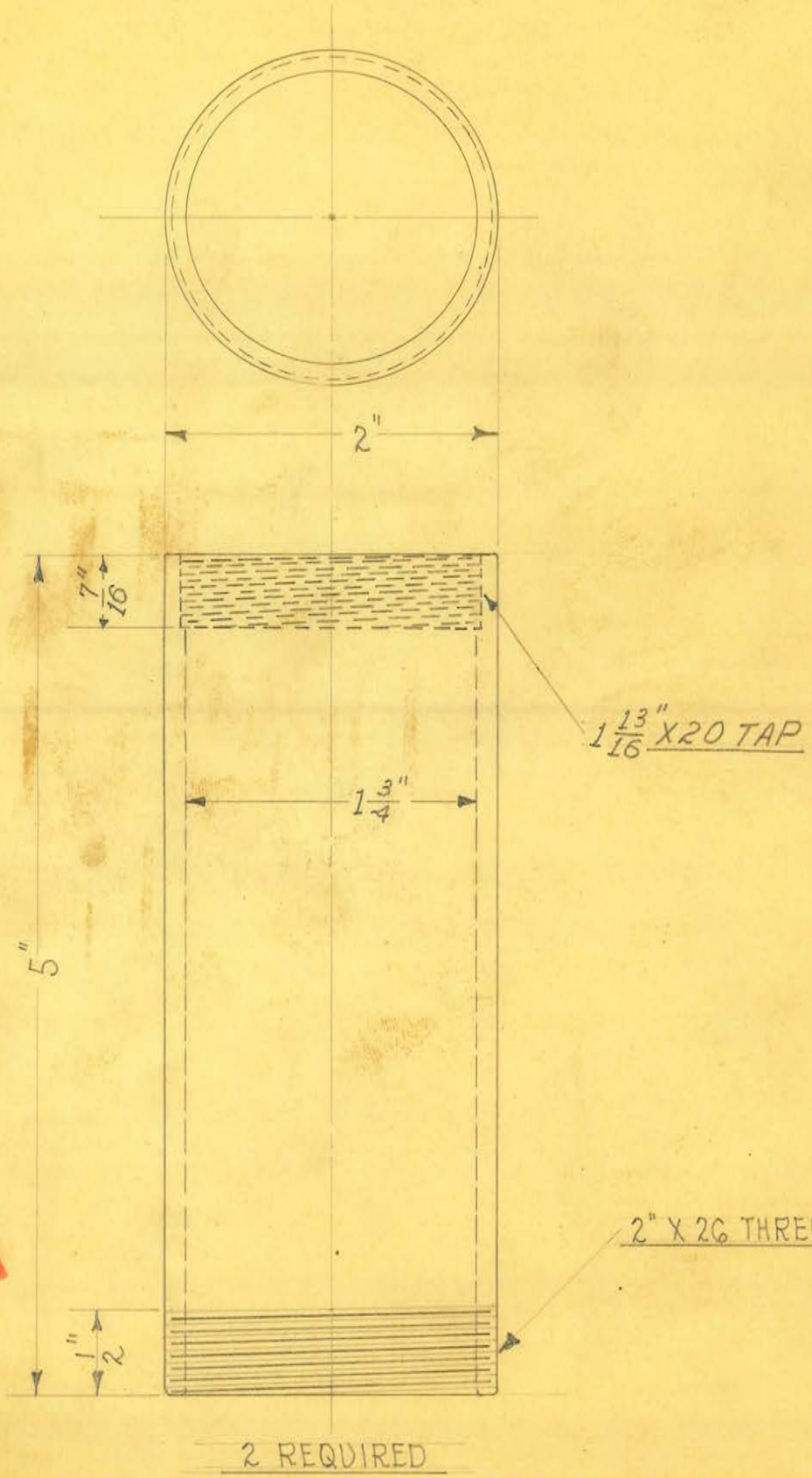


2 REQUIRED

OBSOLETE

| | | | |
|---|---|---|---|
| SIZE | 1 3/4" I.D. X 2" O.D | ISSUE 7-26-35 | 3/8. |
| KIND | BAKELITE TUBING | CHANGED | |
| SHAPE | | " | |
| FINISH | | " | |
| TEMP. | | " | |
| PATT. | | " | |

**TITLE:** MODEL "SP-GO" SHOCKPROOF RAD. UNIT
TRANS. HIGH TENSION CABLE INSULATOR

H. G. FISCHER & CO.
2335 WABANSIA AVE.
CHICAGO, ILL.

CAT. NO.

PART NO. 9742A

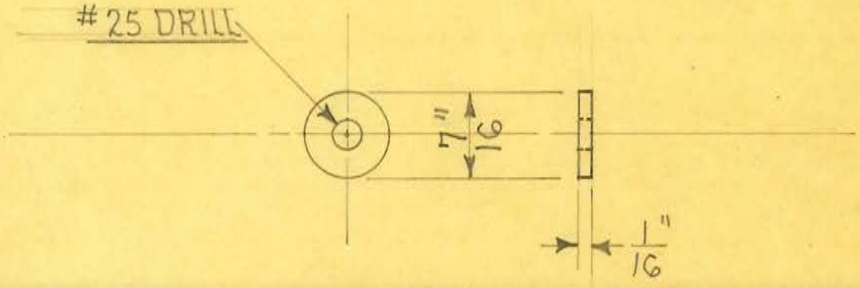


2 REQUIRED

OBSOLETE

| | | | |
|---|---|---|---|
| SIZE | 1/16" SHEET | ISSUE 12-24-35 | J.E. |
| KIND | BAKELITE | CHANGED | |
| SHAPE | | " | |
| FINISH | | " | |
| TEMP. | | " | |
| PATT. | | " | |

**TITLE:** MODEL "SP-60" CONTROL BOX
10 POINT SWITCH CONTACT RING INSULATING WASHER

H. G. FISCHER & CO.
2335 WABANSIA AVE.
CHICAGO, ILL.

CAT. NO.

PART NO. 9742 1/2

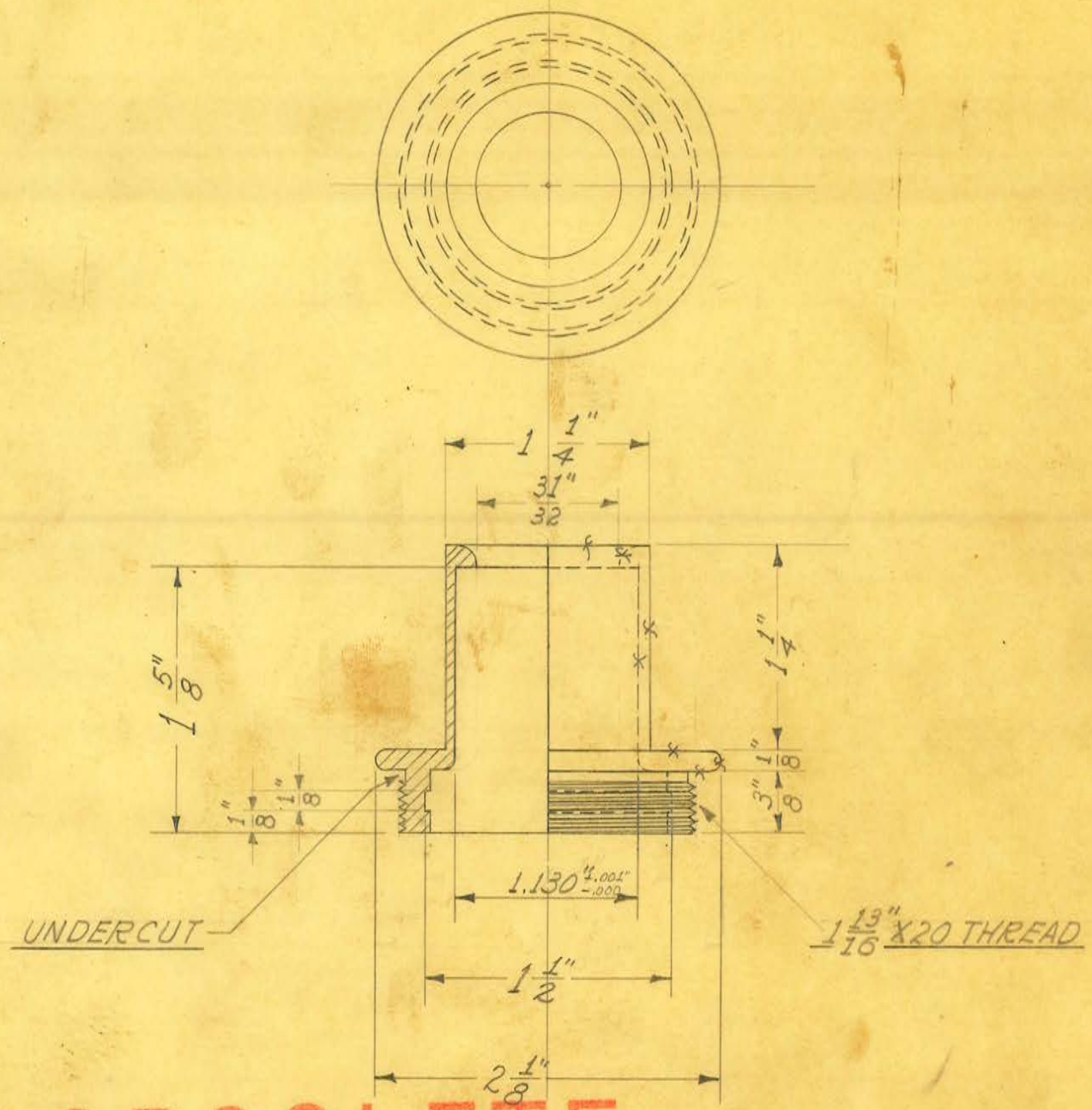


OBSOLETE

| | | | |
|---|---|---|---|
| SIZE | | ISSUE 8-25-36 | J.W. |
| KIND | | CHANGED | |
| SHAPE | | " 9-13-38 | J.W. |
| FINISH | | " | |
| TEMP. | | " | |
| PATT. | 138-853 | " | |

**TITLE:** MODEL "SP-60" SHOCKPROOF RAD. UNIT
TRANSFORMER STRESS CONE END

H. G. FISCHER & CO.
2335 WABANSIA AVE.
CHICAGO, ILL.

CAT. NO.

PART NO. 9743FB

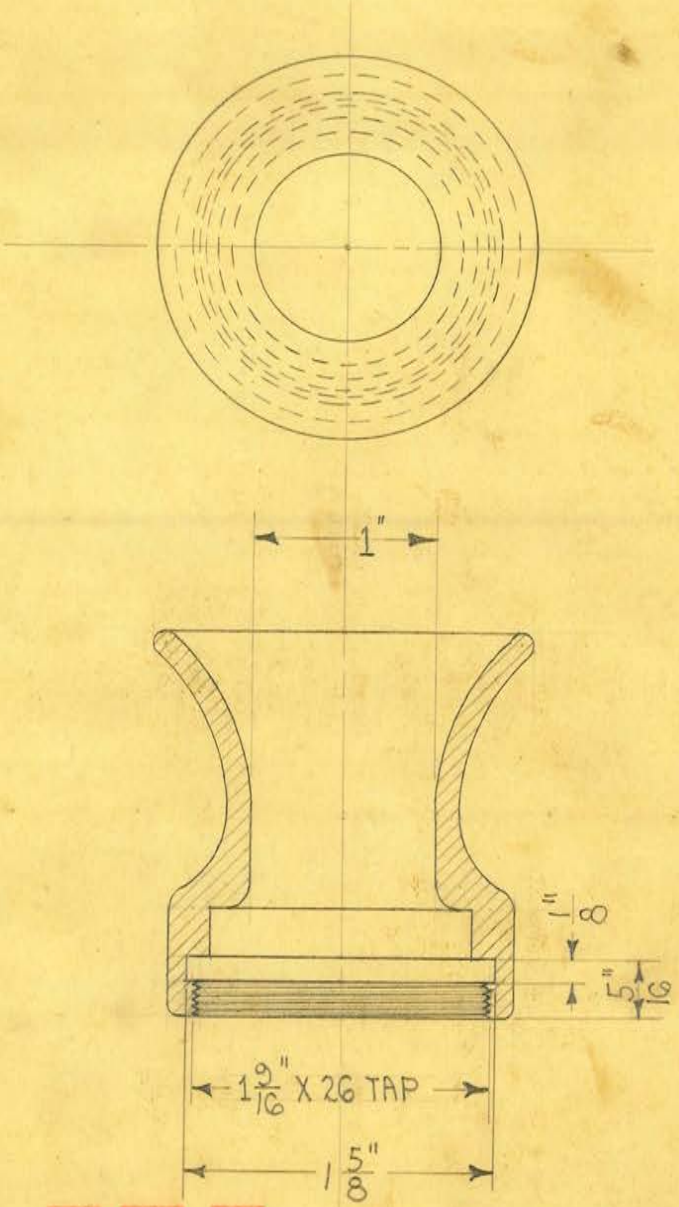


OBSOLETE

| | | | |
|---|---|---|---|
| SIZE | | ISSUE 7-15-35 | A.E. |
| KIND | ALUM. CASTING | CHANGED | |
| SHAPE | | " | |
| FINISH | POL. & BUFF | " | |
| TEMP. | | " | |
| PATT. | 140-855 | " | |

**TITLE:** MODEL "SP-GO" SHOCKPROOF RAD. UNIT
TRANSFORMER STRESS CONE CABLE SUPPORT

H. G. FISCHER & CO.
2335 WABANSIA AVE.
CHICAGO, ILL.

CAT. NO.

PART NO. 9744F

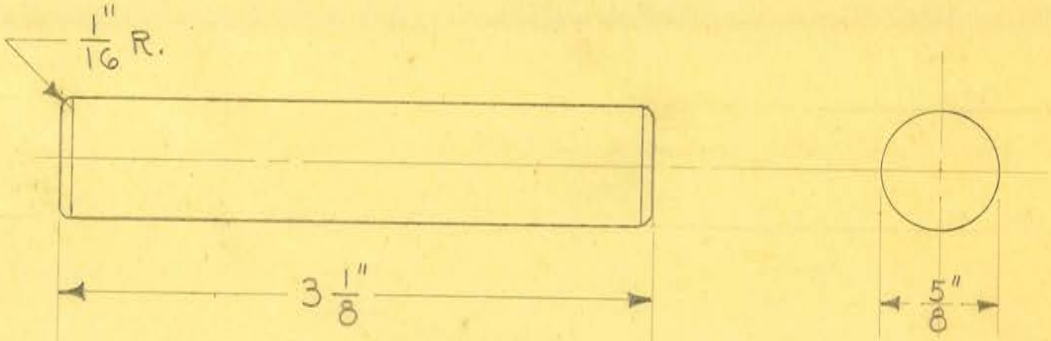


2 REQUIRED

OBSOLETE

| | | | |
|---|---|---|---|
| SIZE | 5/8" C.R.S. ROD | ISSUE 8-6-35 | J.W. |
| KIND | | CHANGED | |
| SHAPE | | " | |
| FINISH | CAD. # 23 | " | |
| TEMP. | | " | |
| PATT. | | " | |

**TITLE:** MOD. "SP-60" SHOCKPROOF RAD. UNIT TUBE HD. SUPP, SWIVEL BRKT. HINGE PIN

H. G. FISCHER & CO.
2335 WABANSIA AVE.
CHICAGO, ILL.

CAT. NO.

PART NO. 9754

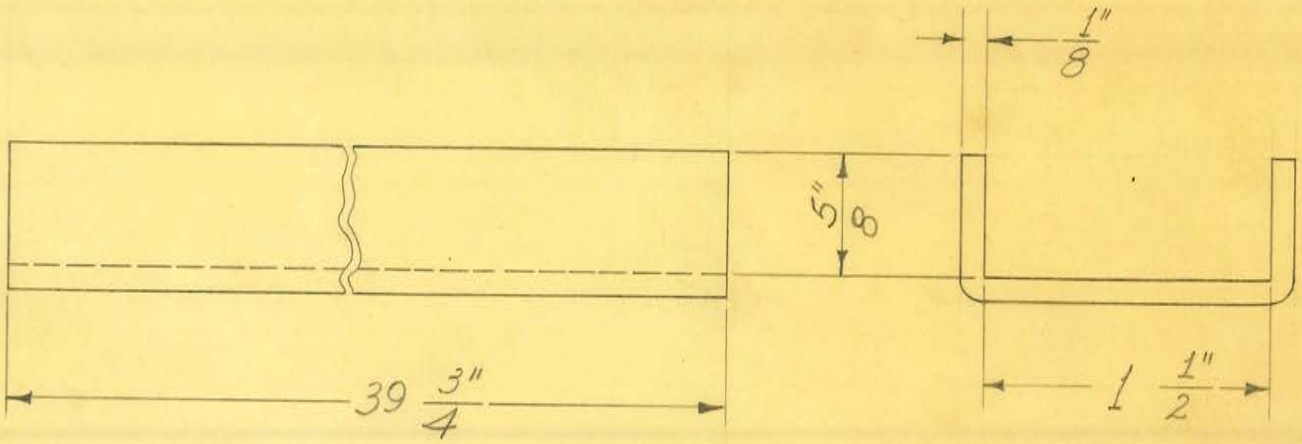


4 REQUIRED

OBSOLETE

| | | | | |
|---|---|---|---|---|
| SIZE | 1/8" SHEET | ISSUE 4-14-38 | J.W. | TITLE: FISCHER 14"X36" 3-COMPARTMENT TANK STAND REINFORCING CHANNEL |
| KIND | C.R. STEEL | CHANGED | | |
| SHAPE | | " | | |
| FINISH | | " | | |
| TEMP. | | " | | |
| PATT. | | " | | |

H. G. FISCHER & CO.
2335 WABANSIA AVE.
CHICAGO, ILL.

CAT. NO.

PART NO. 7890

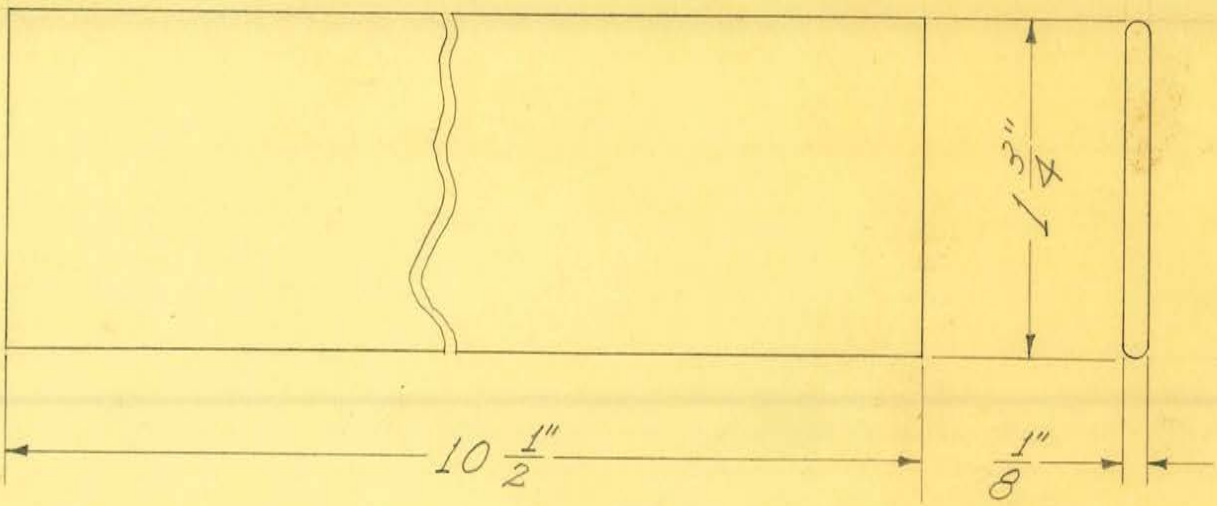


4 REQUIRED

OBSOLETE

| | | | | |
|---|---|---|---|---|
| SIZE | 1 3/4" X 7/8" | ISSUE 4-15-38 | J.W. | TITLE: FISCHER 14"X36" 3-COMPARTMENT TANK STAND-END TIE STRIP |
| KIND | FLAT WIRE | CHANGED | | |
| SHAPE | | " | | |
| FINISH | | " | | |
| TEMP. | | " | | |
| PATT. | | " | | |

H. G. FISCHER & CO.
2335 WABANSIA AVE.
CHICAGO, ILL.

CAT. NO.

PART NO. 7891

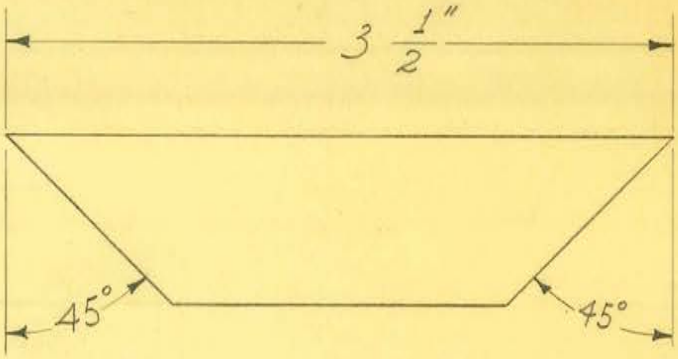


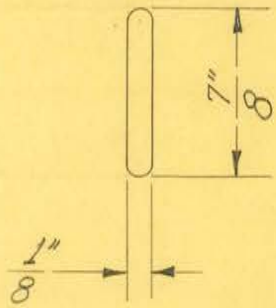


4 REQUIRED

OBSOLETE

| | | | |
|---|---|---|---|
| SIZE | 7/8" X 1/8" | ISSUE 4-15-38 | J.W. |
| KIND | FLAT WIRE | CHANGED | |
| SHAPE | | " | |
| FINISH | | " | |
| TEMP. | | " | |
| PATT. | | " | |

**TITLE:** FISCHER 14"X36" 3-COMPARTMENT TANK STAND - BOTTOM ANGLES TIE PIECE

H. G. FISCHER & CO.
2335 WABANSIA AVE.
CHICAGO, ILL.

CAT. NO.

PART NO. 7892

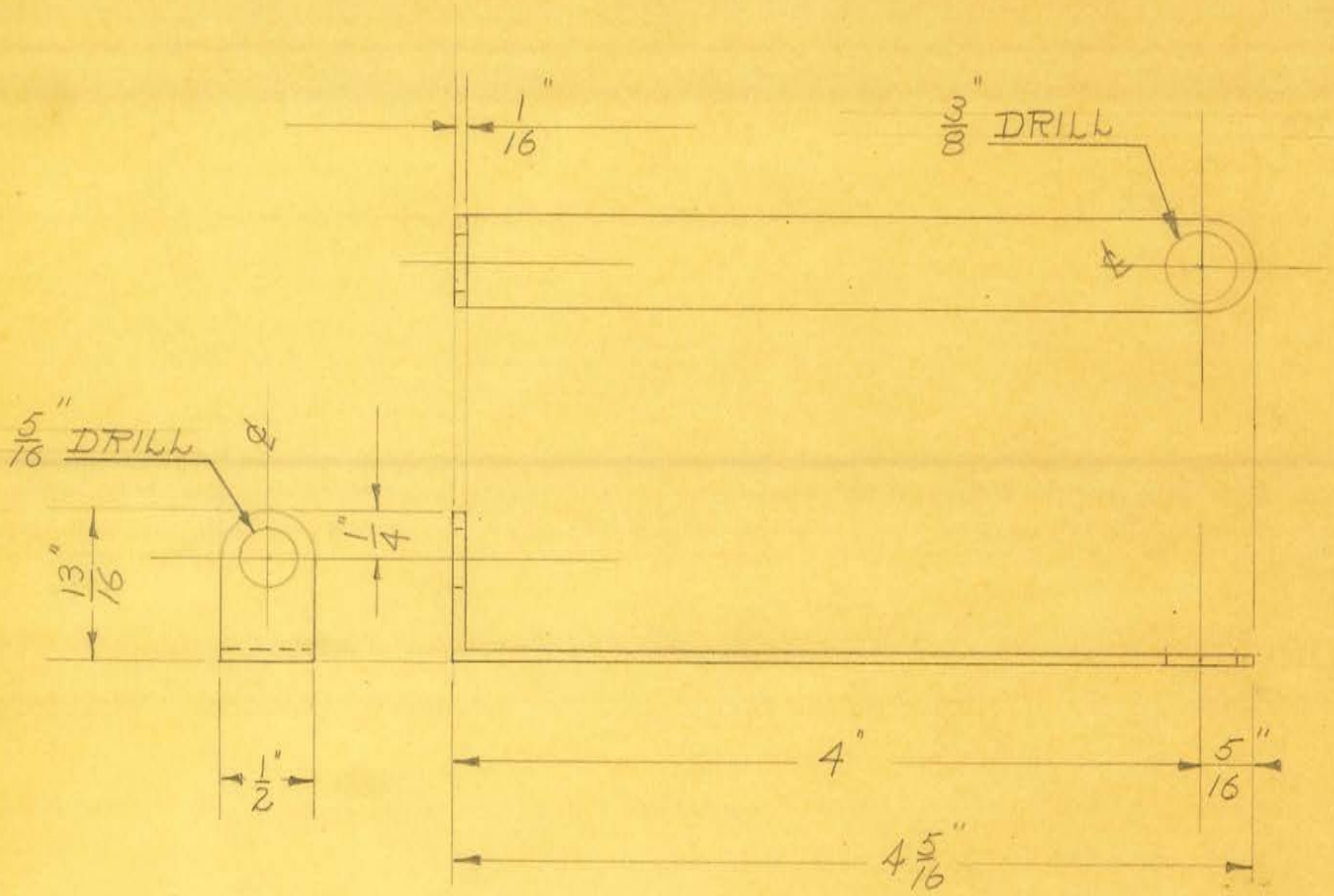


1 REQUIRED

OBSOLETE

| | | | |
|---|---|---|---|
| SIZE | 1/16" X 1/2" STRIP | ISSUE 9-20-33 | N.F. |
| KIND | BRASS | CHANGED | |
| SHAPE | | " " | |
| FINISH | | " " | |
| TEMP. | | " " | |
| PATT. | | " " | |

**TITLE:** MODEL "CDM" OUTFIT HIGH VOLTAGE COIL SUPPORT (LOWER)

H. G. FISCHER & CO.
2335 WABANSIA AVE.
CHICAGO, ILL.

CAT. NO.

PART NO. 7904

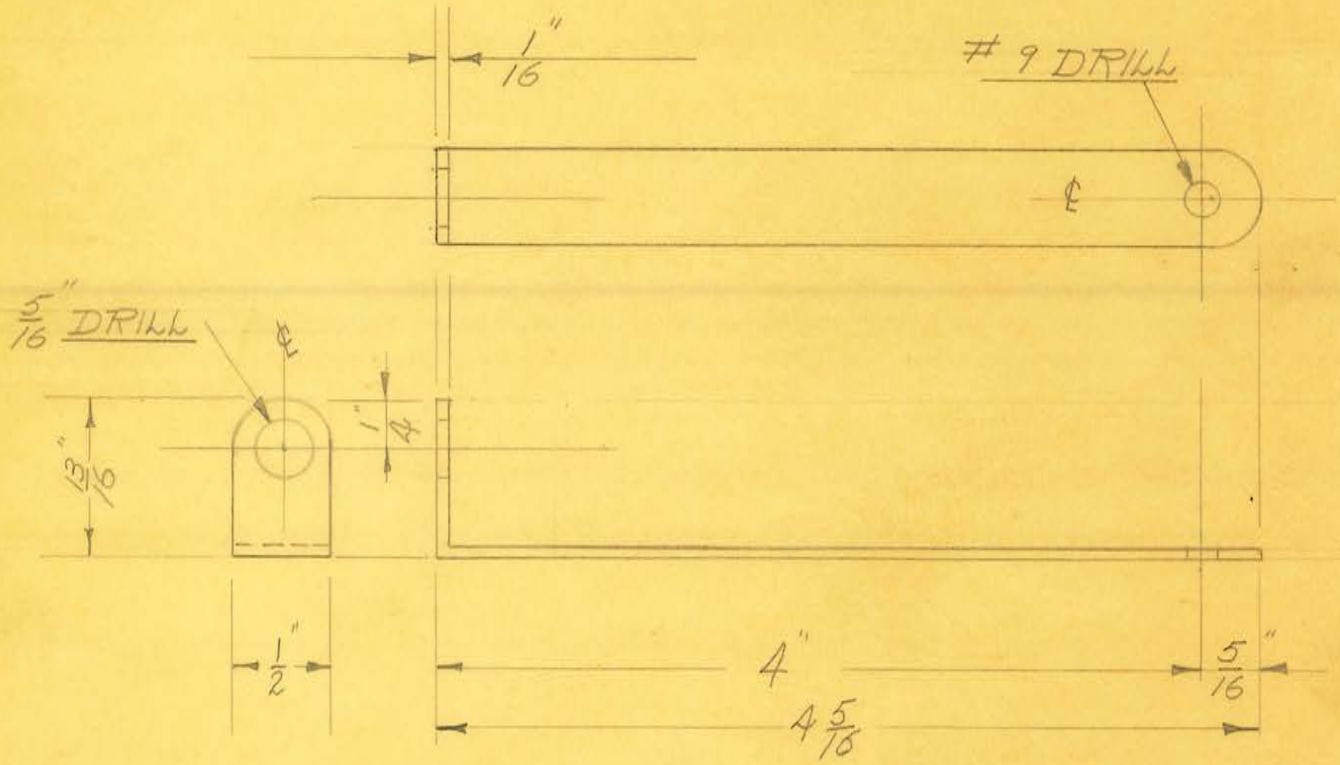


1 REQUIRED

OBSOLETE

| | | | | |
|---|---|---|---|---|
| SIZE | 1/16" X 1/2" STRIP | ISSUE 9-20-33 | N.P. | TITLE: MODEL "CDM" OUTFIT HIGH VOLTAGE COIL SUPPORT (UPPER) |
| KIND | BRASS | CHANGED | | |
| SHAPE | | " " | | |
| FINISH | | " " | | |
| TEMP. | | " " | | |
| PATT. | | " " | | |

H. G. FISCHER & CO.
2335 WABANSIA AVE.
CHICAGO, ILL.

CAT. NO.

PART NO. 7904 1/2

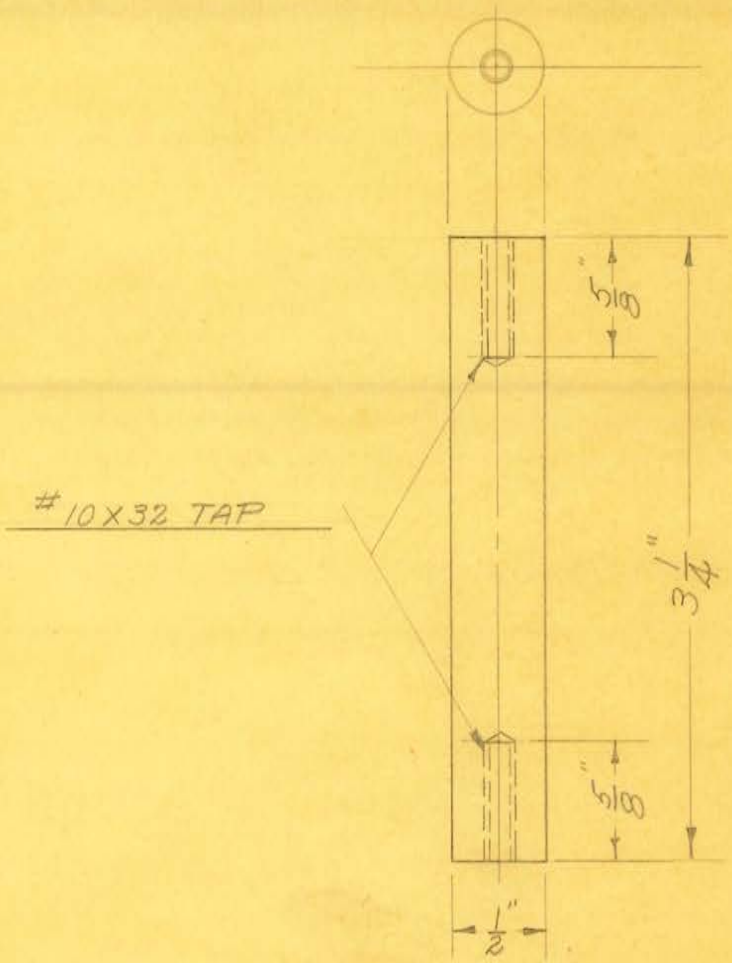


3 REQUIRED

OBSOLETE

| | | | | | |
|---|---|---|---|---|---|
| SIZE | 1/2" ROD | ISSUE 9-20-33 | N.P. | TITLE: MODEL "CDM" OUTFIT TRANS., CHOKE, GAP & COND. SUPPORT POST (BRASS) | |
| KIND | BRASS | CHANGED | | | |
| SHAPE | | " " | | | |
| FINISH | | " " | | | |
| TEMP. | | " " | | H. G. FISCHER & CO. 2335 WABANSIA AVE. CHICAGO, ILL. | CAT. NO. |
| PATT. | | " " | | | PART NO. 7906 |

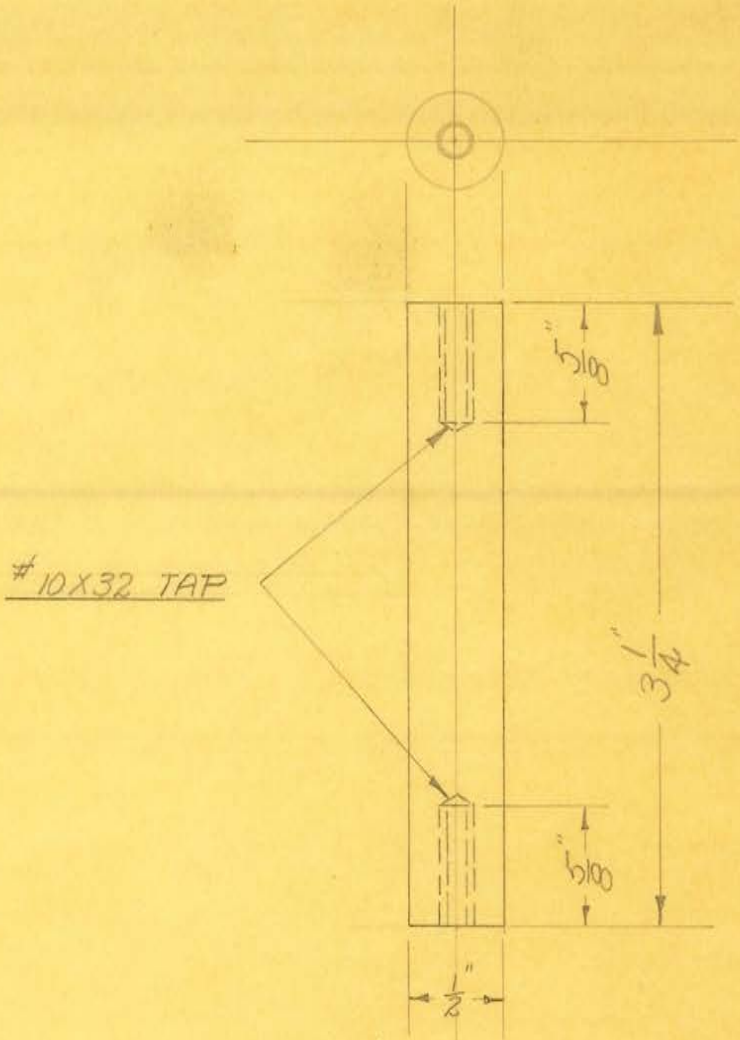


1 REQUIRED

OBSOLETE

| | | | |
|---|---|---|---|
| SIZE | ½ ROD. | ISSUE 9-20-33 | N.P. |
| KIND | NATURAL BAK | CHANGED | |
| SHAPE | | " " | |
| FINISH | | " " | |
| TEMP. | | " " | |
| PATT. | | " " | |

**TITLE:** MODEL "CDM" OUTFIT TRANS., CHOKE, GAP & COND. SUPPORT POST (BAKELITE)

H. G. FISCHER & CO.
2335 WABANSIA AVE.
CHICAGO, ILL.

CAT. NO.

PART NO. 7907

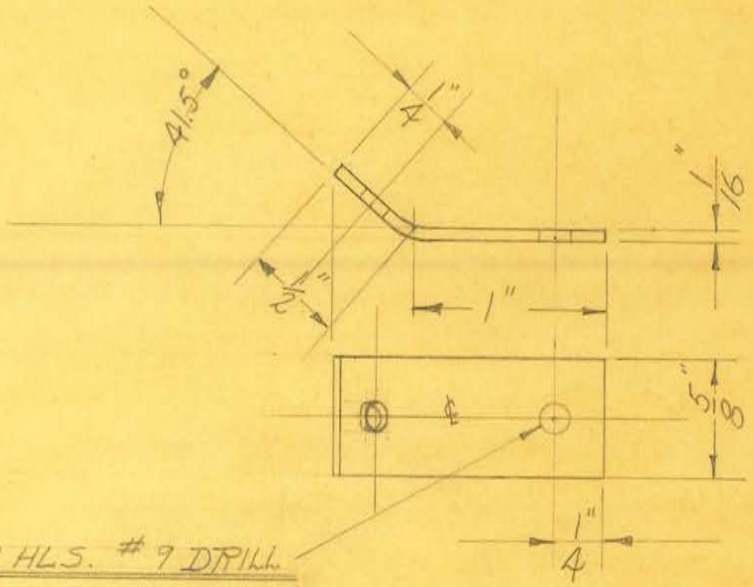


1 REQUIRED

OBSOLETE

| | | | | | | | |
|---|---|---|---|---|---|---|---|
| SIZE | ½ SHEET | ISSUE 9-20-33 | N.P. | TITLE: MODEL "CDM" OUTFIT SPARK GAP SUPPORT PIECE - "SMALL" | | | |
| KIND | BRASS | CHANGED | | | | | |
| SHAPE | | " " | | | | | |
| FINISH | | " " | | | | | |
| TEMP. | | " " | | H. G. FISCHER & CO. 2335 WABANSIA AVE. CHICAGO, ILL. | CAT. NO. | PART NO. 7908 | |
| PATT. | | " " | | | | | |

#2 H.L.S. #9 DRL.

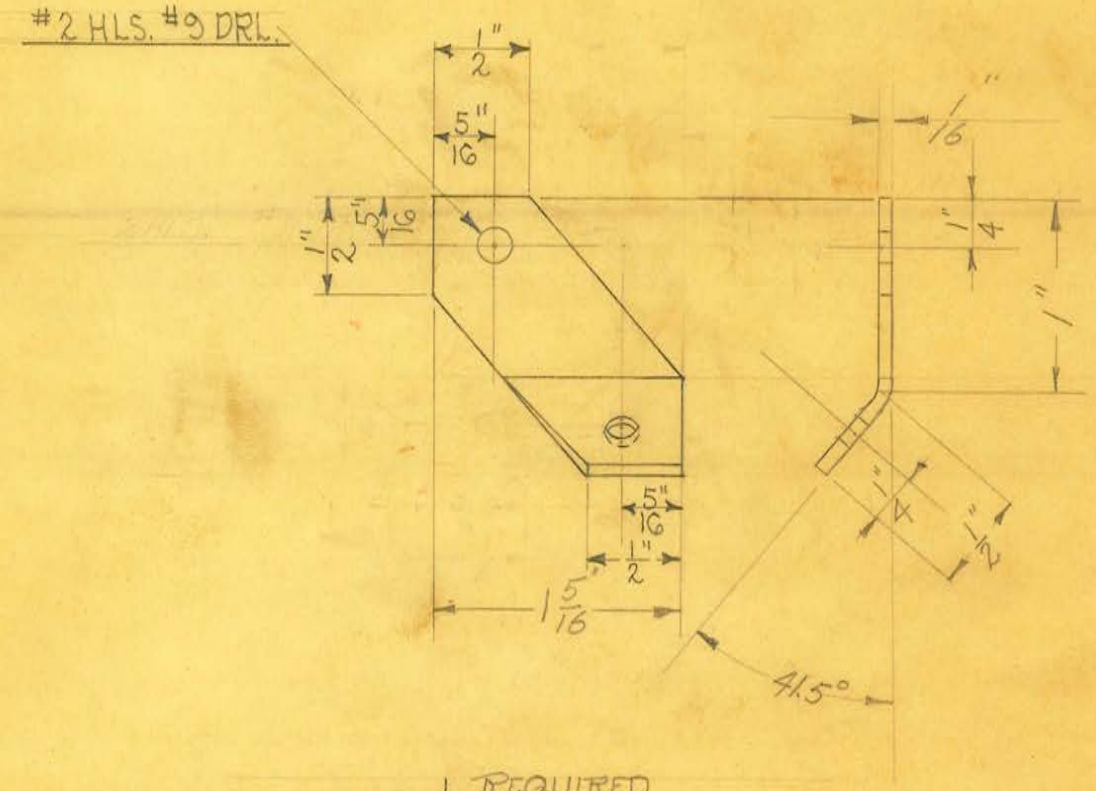


1 REQUIRED

OBSOLETE

| | | | | | |
|---|---|---|---|---|---|
| SIZE | 1/16" SHEET | ISSUE 9-20-33 | N.P. | TITLE: MODEL "CDM" OUTFIT SPARK GAP SUPPORT PIECE - LARGE | |
| KIND | BRASS | CHANGED | | | |
| SHAPE | | " " | | | |
| FINISH | | " " | | | |
| TEMP. | | " " | | H. G. FISCHER & CO. 2335 WABANSIA AVE. CHICAGO, ILL. | CAT. NO. |
| PATT. | | " " | | | PART NO. 7909 |

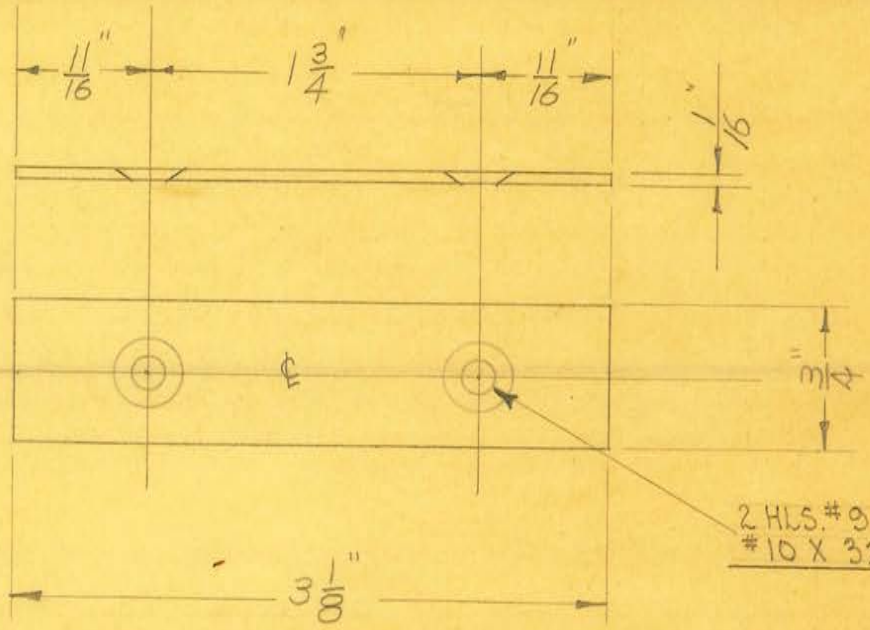


1 REQUIRED

OBSOLETE

| | | | | |
|---|---|---|---|---|
| SIZE | 1/16 SHEET | ISSUE 9-20-33 | N.P. | TITLE: MODEL "CDM" OUTFIT SPARK GAP LOCKING STRIP |
| KIND | ~~BRASS~~ | CHANGED | | |
| SHAPE | | " " | | |
| FINISH | | " " | | |
| TEMP. | | " " | | |
| PATT. | | " " | | |

H. G. FISCHER & CO.
2335 WABANSIA AVE.
CHICAGO, ILL.

CAT. NO.

PART NO. 7910

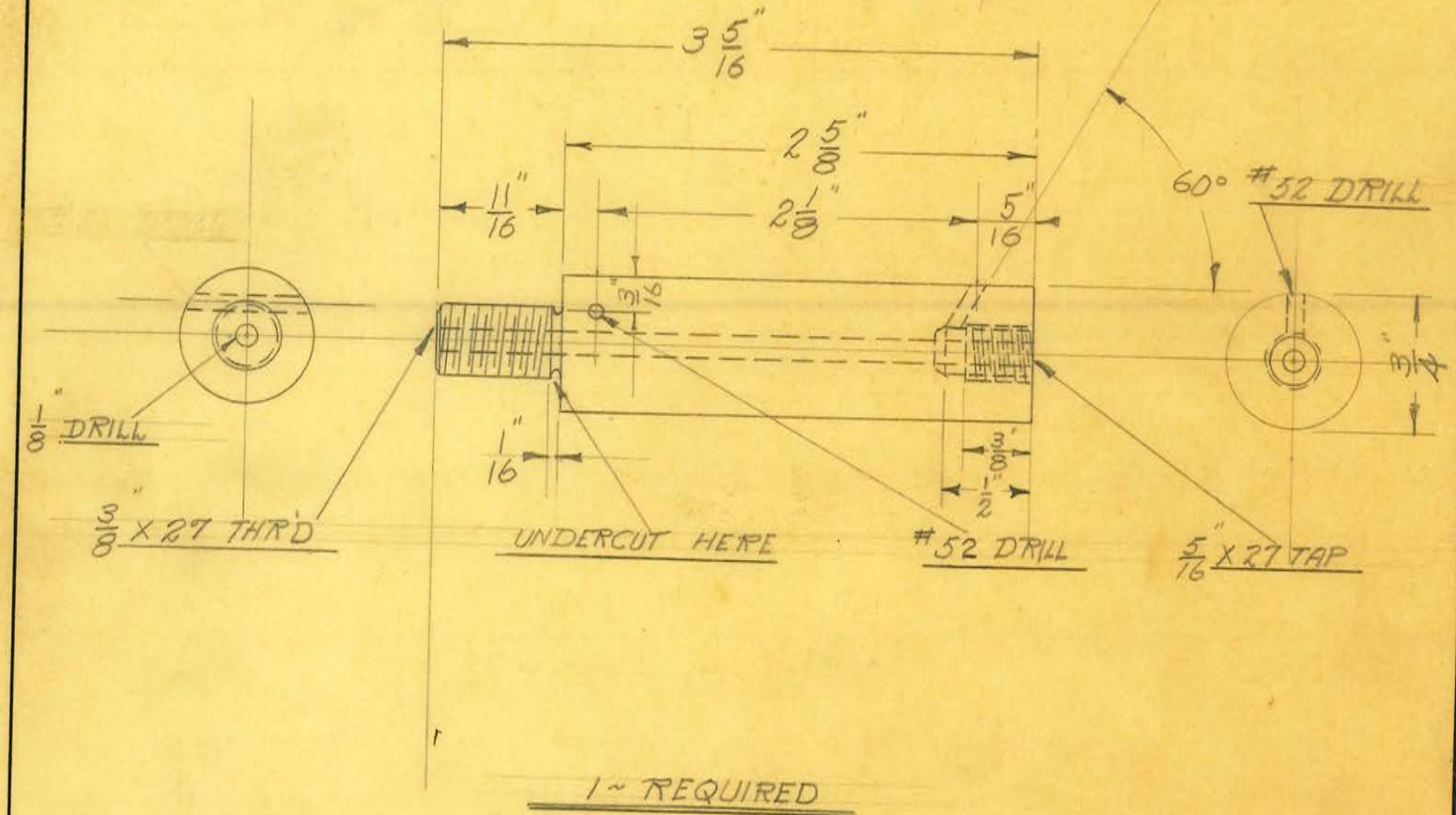


1 ~ REQUIRED

OBSOLETE

| | | | | |
|---|---|---|---|---|
| SIZE | 3/4" | ISSUE 11-7-33 | N.P. | TITLE: MODEL "CDM" HIGH VOLTAGE COIL PRIMARY CORE |
| KIND | BAKELITE ROD | CHANGED | | |
| SHAPE | | " | | |
| ~~FINISH~~ | BLACK "X" | " | | |
| TEMP. | | " | | |
| PATT. | | " | | |

H. G. FISCHER & CO.
2335 WABANSIA AVE.
CHICAGO, ILL.

CAT. NO.

PART NO. 7914

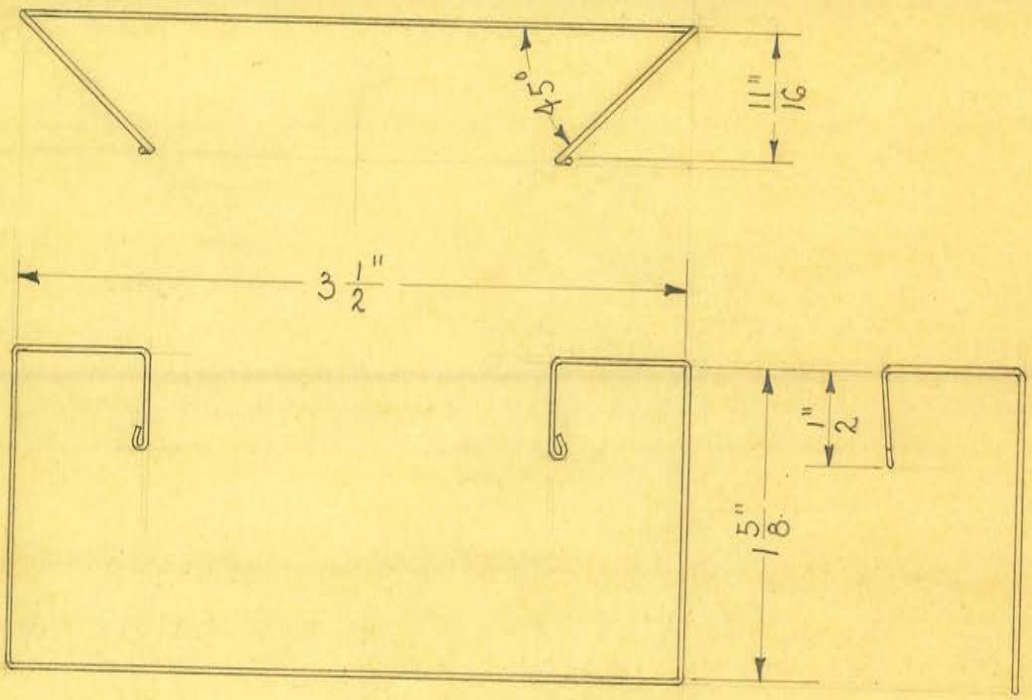


OBSOLETE

| | | | | |
|---|---|---|---|---|
| SIZE | .020" | ISSUE 3-5-35 | H.E. | TITLE: WIRE SUPPORT FOR EXCEL PLATE MARKER |
| KIND | PIANO WIRE | CHANGED | | |
| SHAPE | | " | | |
| FINISH | | " | | |
| TEMP. | | " | | |
| PATT. | | " | | |

H. G. FISCHER & CO.
2335 WABANSIA AVE.
CHICAGO, ILL.

CAT. NO.

PART NO. 7960

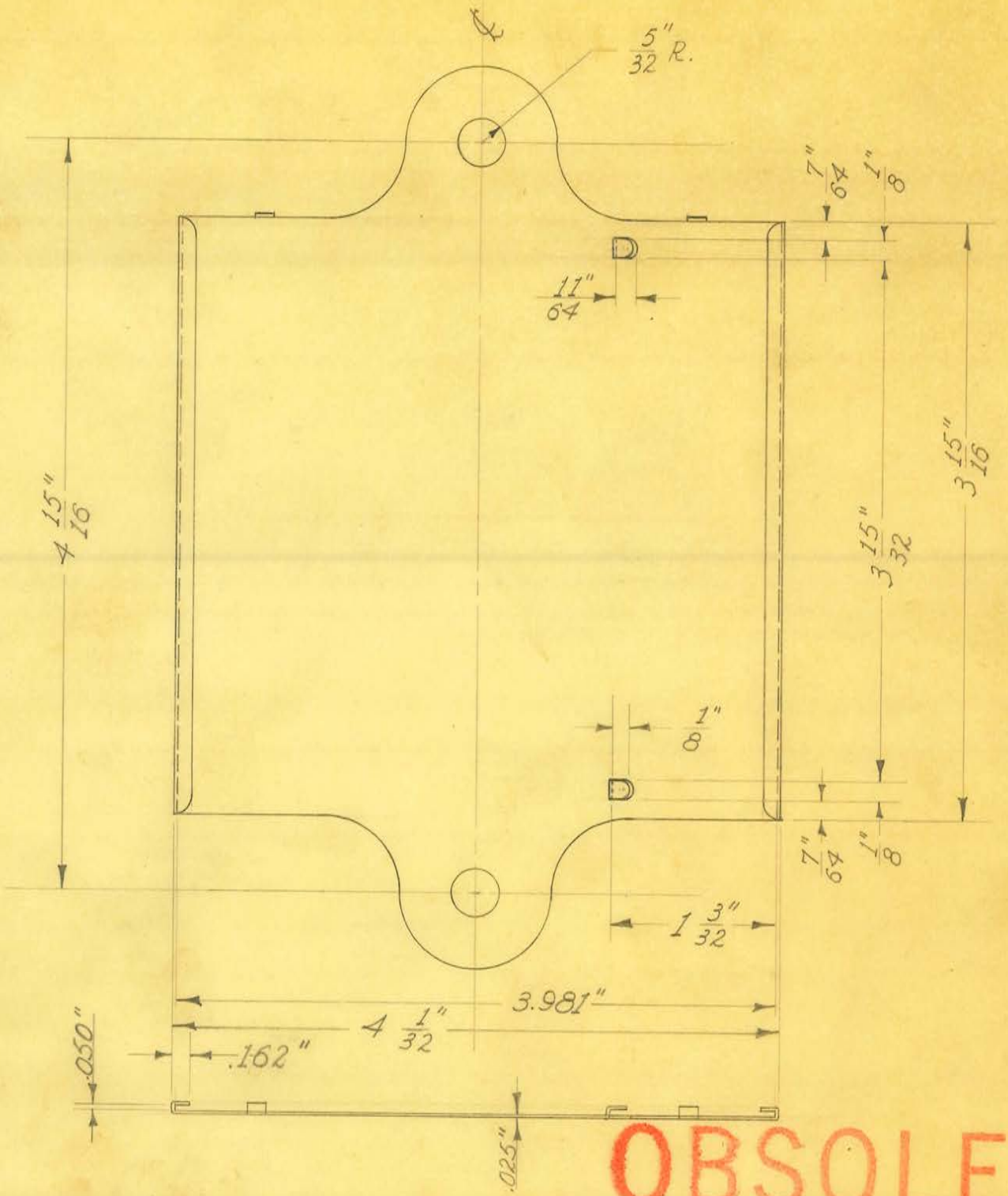


OBSOLETE

| | | | |
|---|---|---|---|
| SIZE | | ISSUE 11-13-36 | J.W. |
| KIND | | CHANGED | |
| SHAPE | | " | |
| FINISH | | " | |
| TEMP. | | " | |
| PATT. | | " | |

**TITLE:** 36" SPINOGRAPH ADJUSTABLE FILTER

H. G. FISCHER & CO.
2335 WABANSIA AVE.
CHICAGO, ILL.

CAT. NO.

PART NO. 7966F

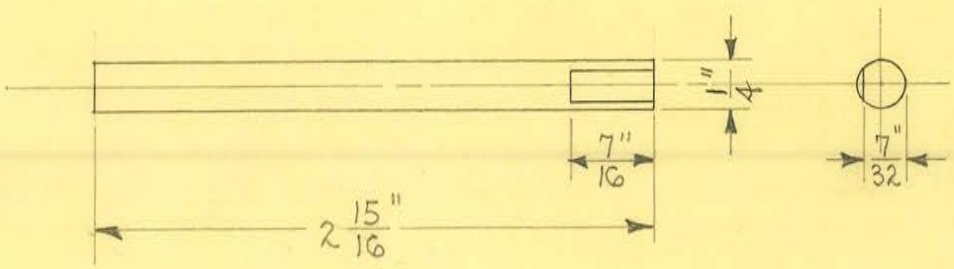


2 REQUIRED

OBSOLETE

| | | | |
|---|---|---|---|
| SIZE | 1/4" DIAM. | ISSUE 3-26-37 | A.E. |
| KIND | SCR. STOCK | CHANGED | |
| SHAPE | | " | |
| FINISH | | " | |
| TEMP. | | " | |
| PATT. | | " | |

**TITLE:** "CSWI" SEPARABLE BASE-
VALVE CONTROL ROD

H. G. FISCHER & CO.
2335 WABANSIA AVE.
CHICAGO, ILL.

CAT. NO.

PART NO. 10162

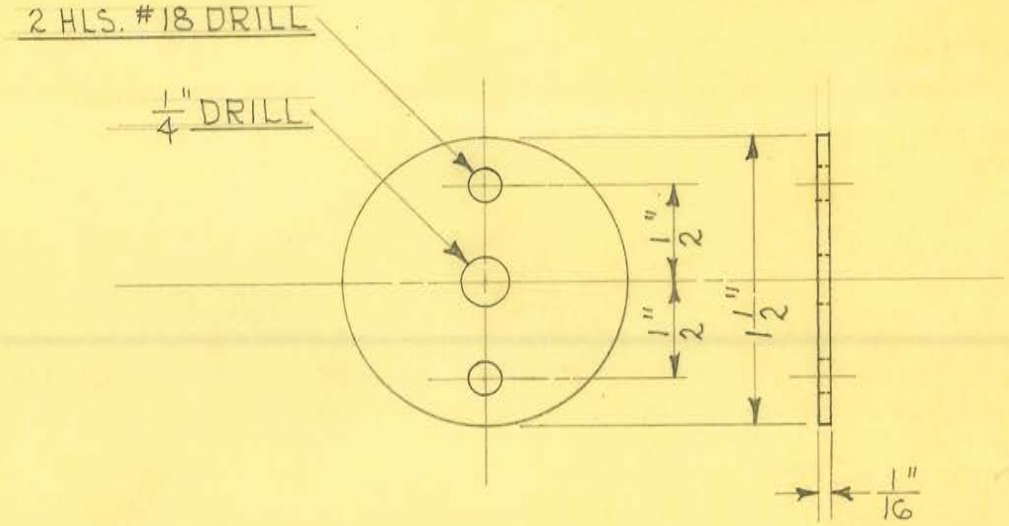


2 REQUIRED

OBSOLETE

| | | | |
|---|---|---|---|
| SIZE | 1/16" | ISSUE 3-29-37 | H.E. |
| KIND | SHEET BRASS | CHANGED | |
| SHAPE | | " | |
| FINISH | CAD. #23 | " | |
| TEMP. | | " | |
| PATT. | | " | |

**TITLE:** "CSWI" SEPARABLE BASE
VALVE CONTROL ROD BEARING PLATE

H. G. FISCHER & CO.
2335 WABANSIA AVE.
CHICAGO, ILL.

CAT. NO.

PART NO. 10162 1/2

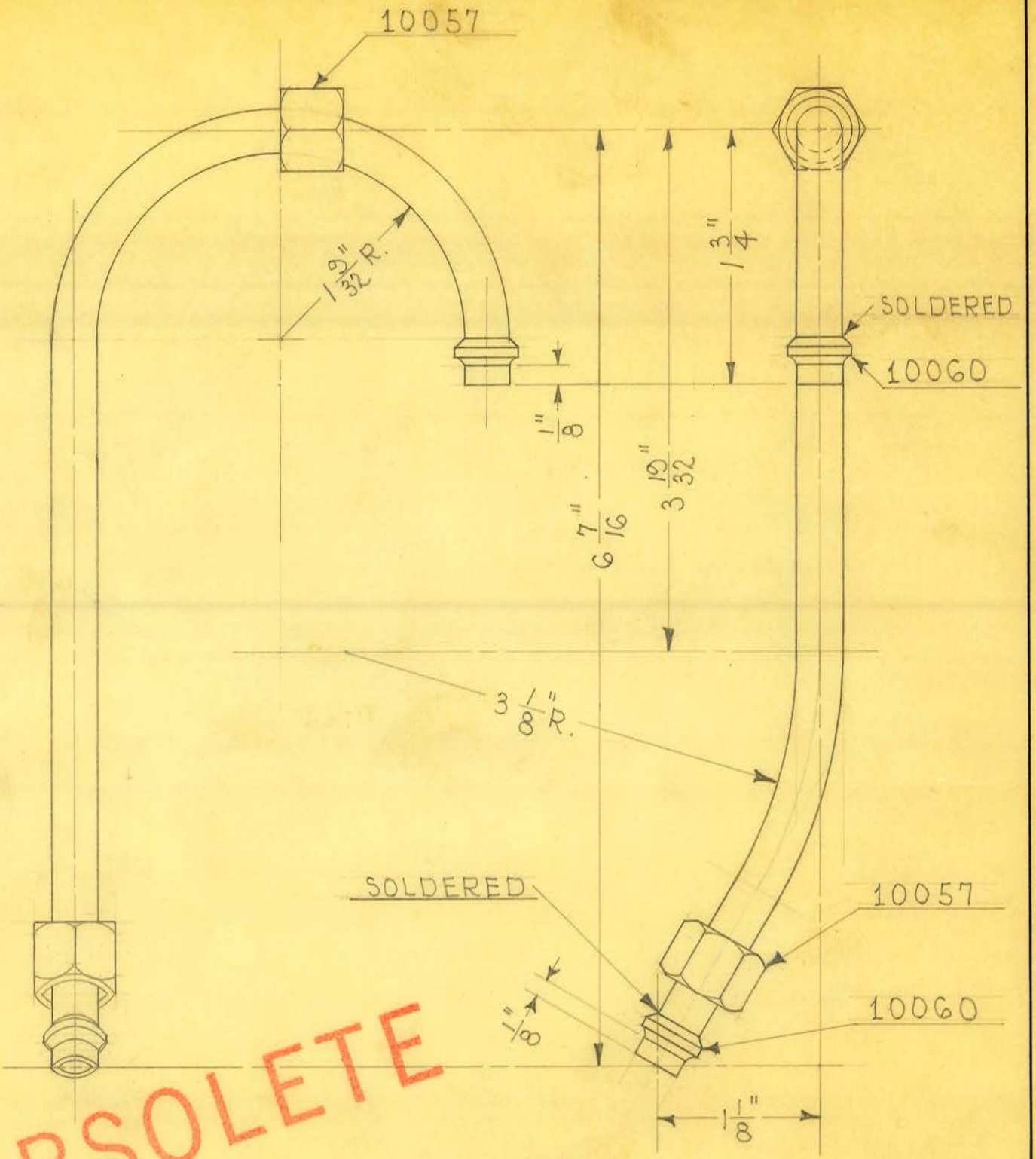


OBSOLETE

DEVELOPED LENGTH - 10 1/8"

1 REQUIRED

| | | | |
|---|---|---|---|
| SIZE | 5/16" O.D. X 1/4" I.D. | ISSUE 12-29-36 | H.E. |
| KIND | COPPER TUBING | CHANGED | |
| SHAPE | | " | |
| FINISH | | " | |
| TEMP. | | " | |
| PATT. | | " | |

**TITLE:** "CSWI" SEPARABLE BASE - VACUUM CONTROL VALVE TUBE ASSEMBLY

H. G. FISCHER & CO.
2335 WABANSIA AVE.
CHICAGO, ILL.

CAT. NO.

PART NO. 10163G

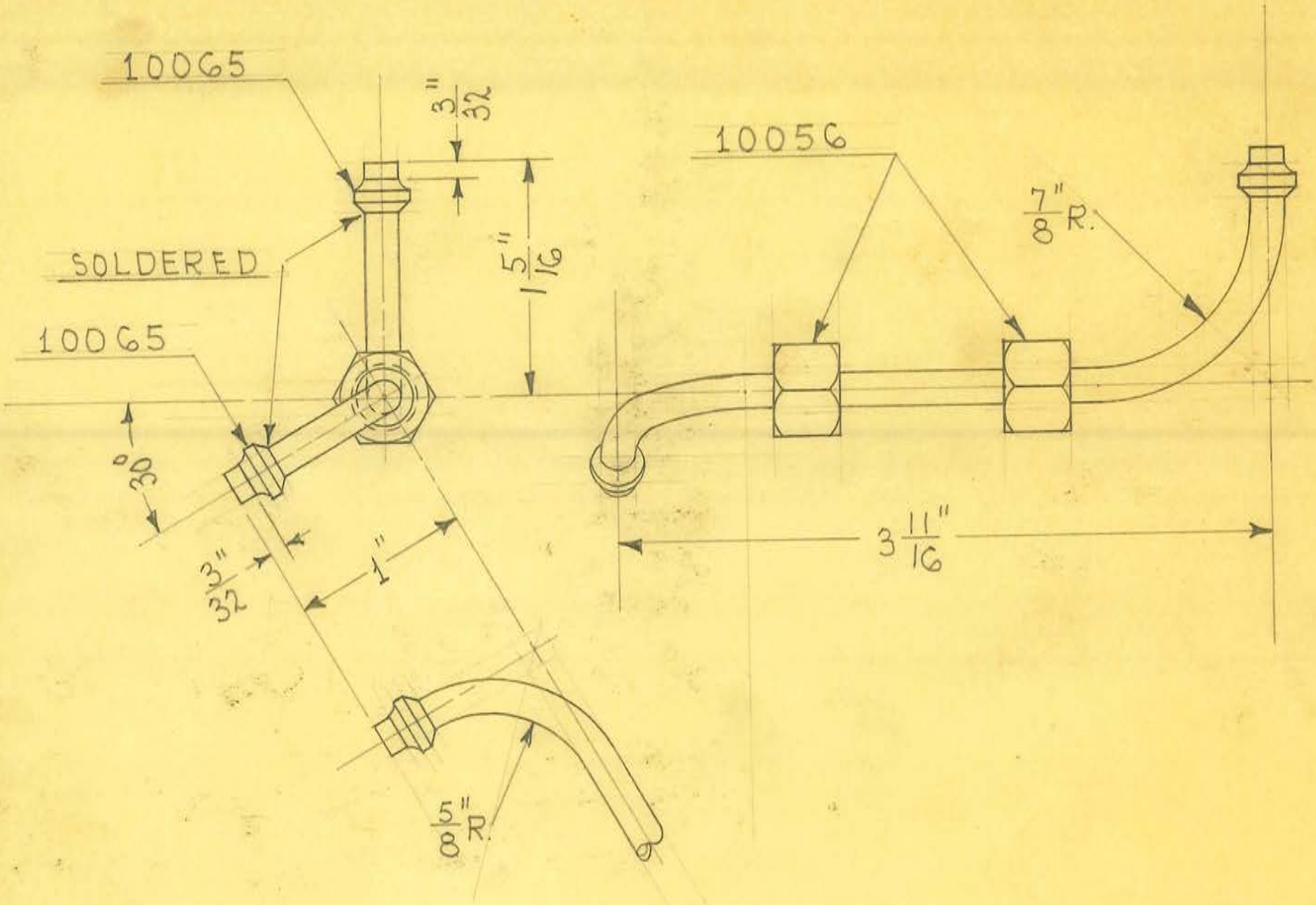


DEVELOPED LENGTH - 5 9/32"

1 REQUIRED

OBSOLETE

| | | | |
|---|---|---|---|
| SIZE | 3/16" O.D. X 1/8" I.D. | ISSUE 1-13-37 | 24.6. |
| KIND | COPPER TUBING | CHANGED | |
| SHAPE | | " | |
| FINISH | | " | |
| TEMP. | | " | |
| PATT. | | " | |

**TITLE:** "CSWI" SEPARABLE BASE - SMALL PRESSURE CONTROL VALVE TUBE ASSEMBLY

H. G. FISCHER & CO.
2335 WABANSIA AVE.
CHICAGO, ILL.

CAT. NO.

PART NO. 10164G

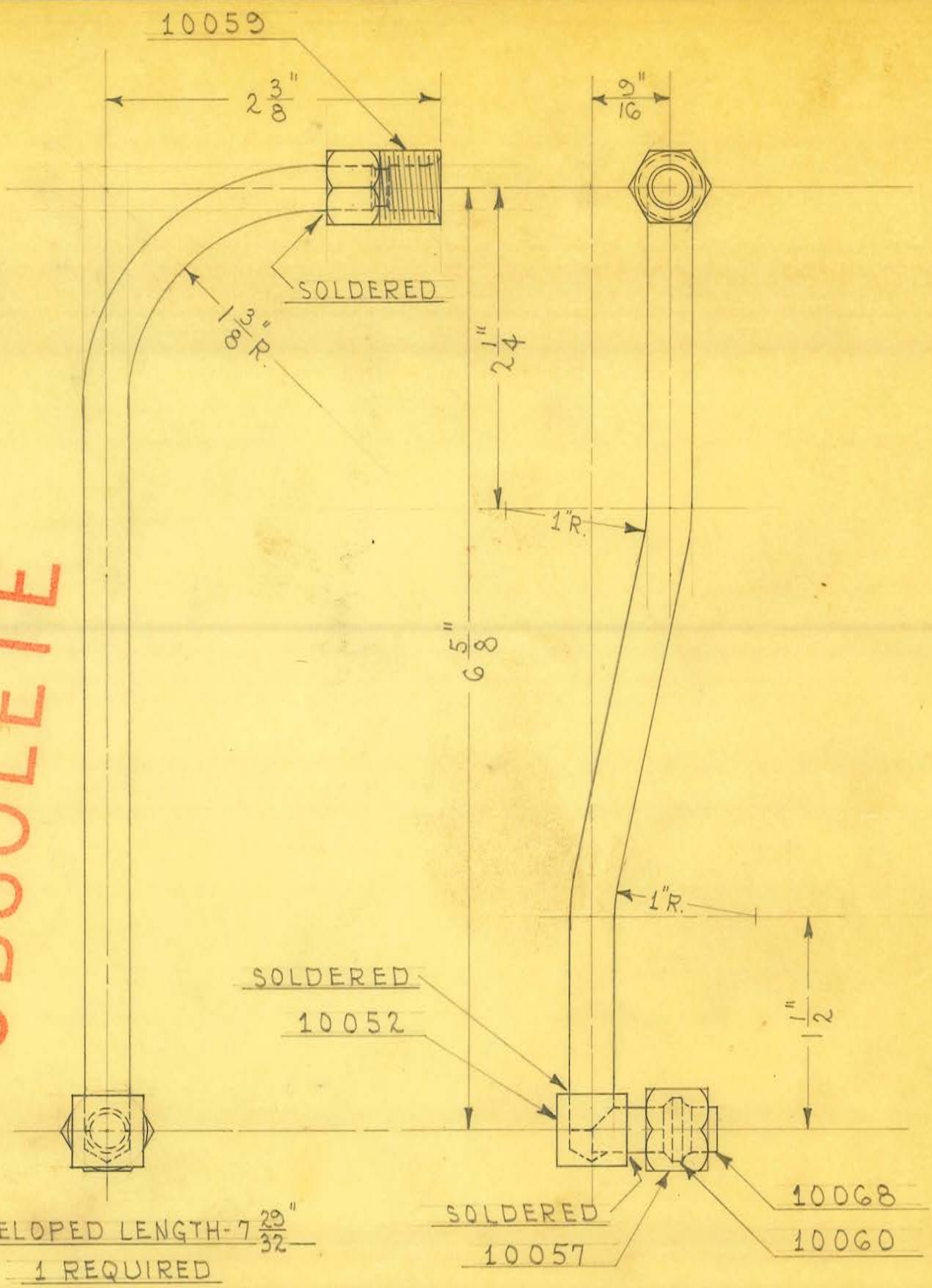


OBSOLETE

DEVELOPED LENGTH- 7 29/32"

1 REQUIRED

| | | | |
|---|---|---|---|
| SIZE | 5/16" O.D. X 1/4" I.D. | ISSUE 1-8-37 | A.E. |
| KIND | COPPER TUBING | CHANGED | |
| SHAPE | | " | |
| FINISH | | " | |
| TEMP. | | " | |
| PATT. | | " | |

**TITLE:** "CSWI" SEPARABLE BASE - PRESSURE - PUMP TUBE - UPPER ASSEMBLY

H. G. FISCHER & CO.
2335 WABANSIA AVE.
CHICAGO, ILL.

CAT. NO.

PART NO. 10165G

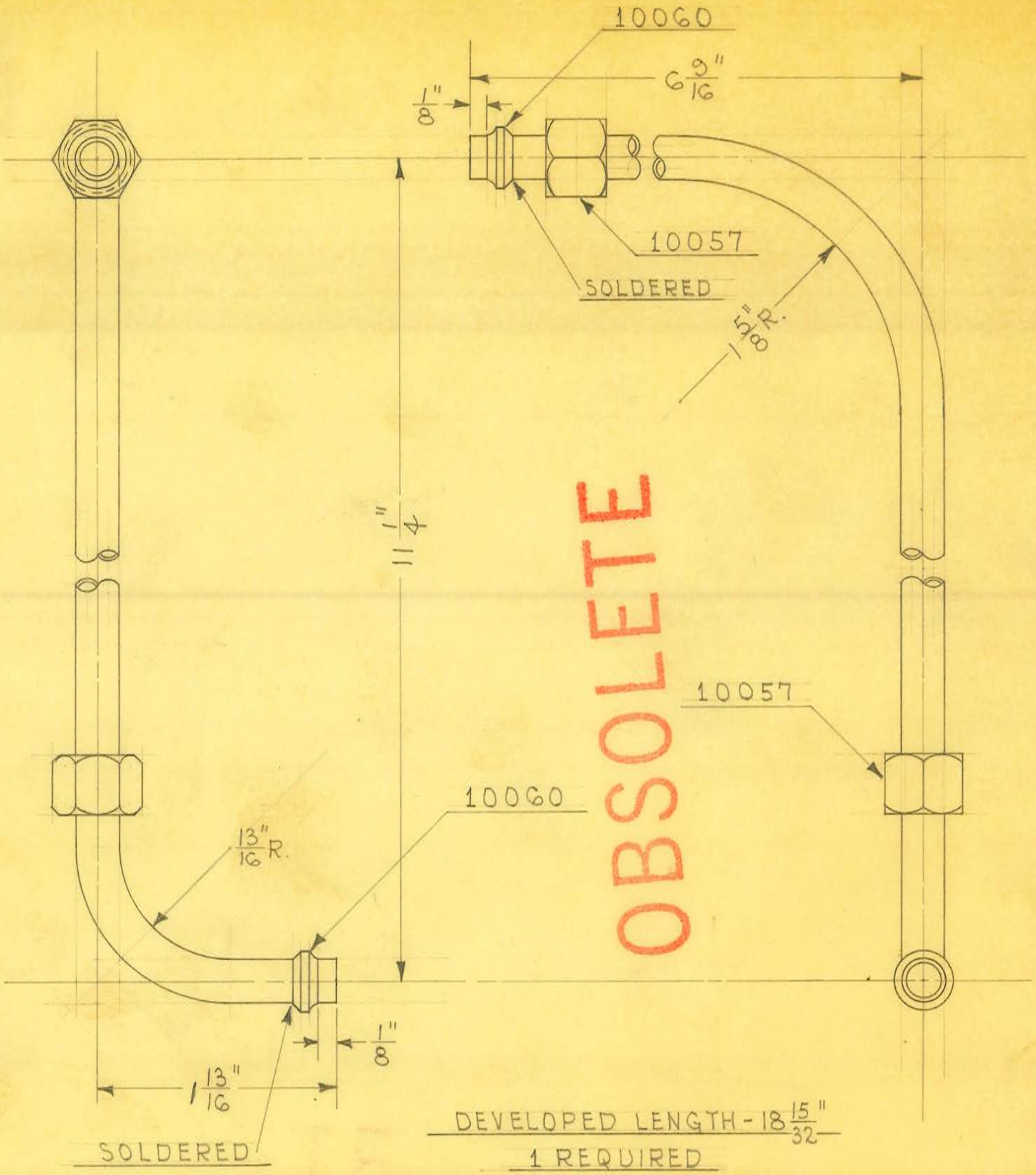


DEVELOPED LENGTH - 18 15/32"

1 REQUIRED

| | | | |
|---|---|---|---|
| SIZE | 5/16" O.D. X 1/4" I.D. | ISSUE 1-23-37 | A.E. |
| KIND | COPPER TUBING | CHANGED | |
| SHAPE | | " | |
| FINISH | | " | |
| TEMP. | | " | |
| PATT. | | " | |

**TITLE:** "CSWI" SEPARABLE BASE-PRESSURE-PUMP TUBE-LOWER ASSEMBLY

H. G. FISCHER & CO.
2335 WABANSIA AVE.
CHICAGO, ILL.

CAT. NO.

PART NO. 101666

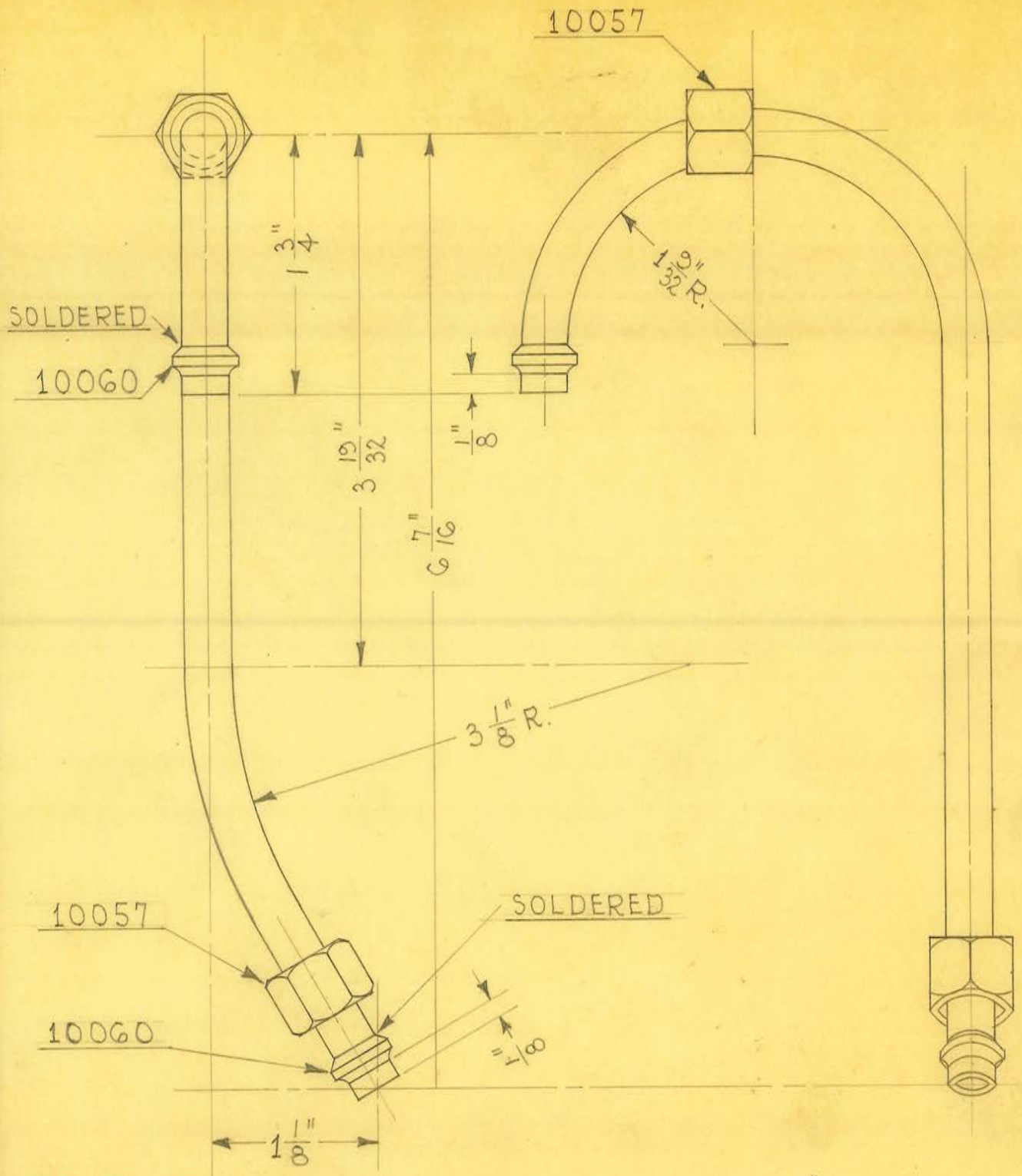


OBSOLETE

DEVELOPED LENGTH - 10 1/8"

1 REQUIRED

| | | | |
|---|---|---|---|
| SIZE | 5/16" O.D. X 1/4" I.D. | ISSUE 12-30-36 | A.E. |
| KIND | COPPER TUBING | CHANGED | |
| SHAPE | | " | |
| FINISH | | " | |
| TEMP. | | " | |
| PATT. | | " | |

**TITLE:** "CSWI" SEPARABLE BASE - PRESSURE CONTROL VALVE TUBE ASSEMBLY

H. G. FISCHER & CO.
2335 WABANSIA AVE.
CHICAGO, ILL.

CAT. NO.

PART NO. 10167G

4 HLS. #9 DRILL CSK. FOR #10 F. HD. SCR.

3/8" DRILL

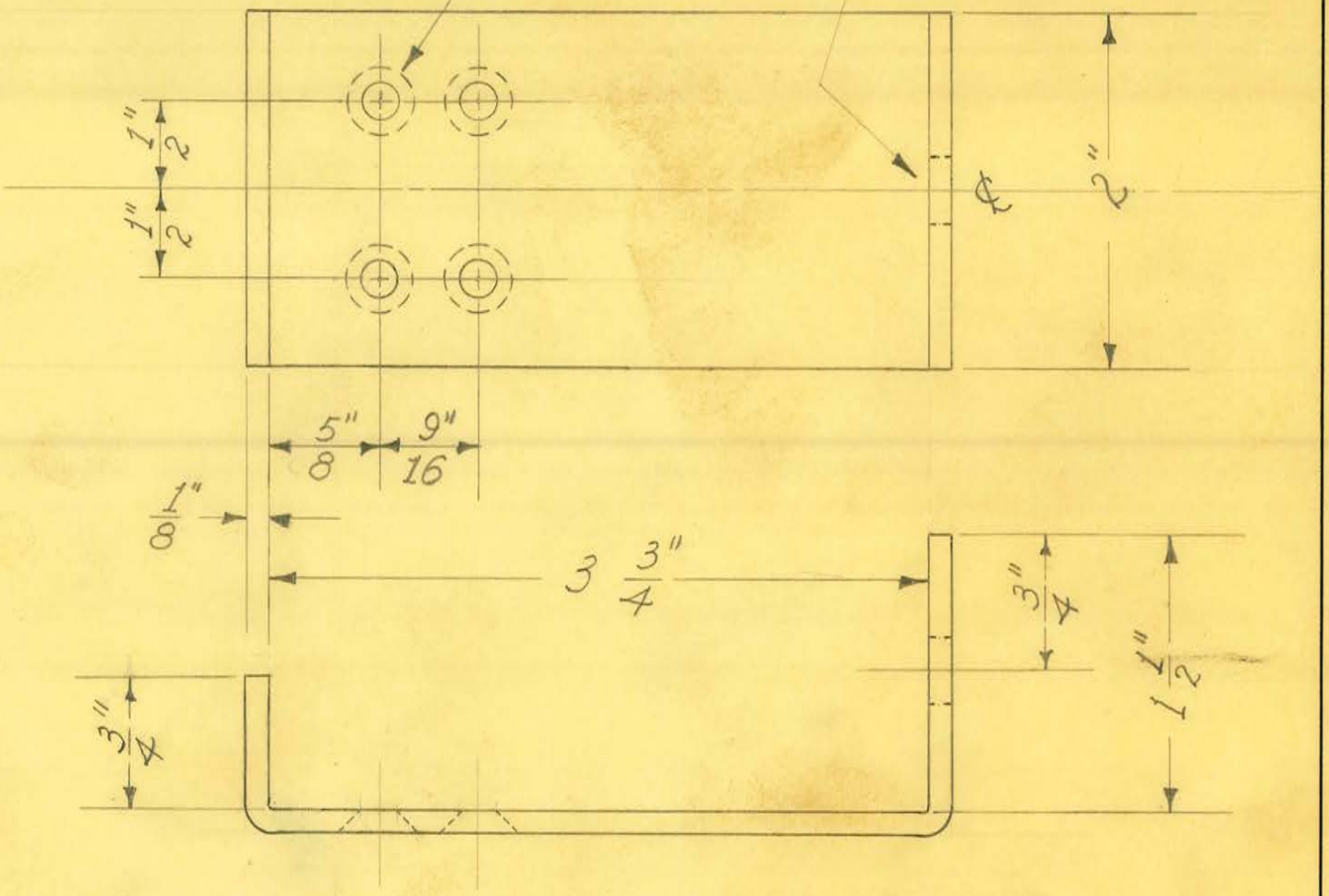


DEVELOPED LENGTH = 6 1/8"

2 REQUIRED

OBSOLETE

| | | | | |
|---|---|---|---|---|
| SIZE | 1/8" X 2" | ISSUE 2-18-37 | J.W. | TITLE: "CSWI" SEPERABLE BASE PACKING CLAMP |
| KIND | C.R. STEEL | CHANGED | | |
| SHAPE | | " | | |
| FINISH | | " | | |
| TEMP. | | " | | |
| PATT. | | " | | |

H. G. FISCHER & CO.
2335 WABANSIA AVE.
CHICAGO, ILL.

CAT. NO.

PART NO. 10169

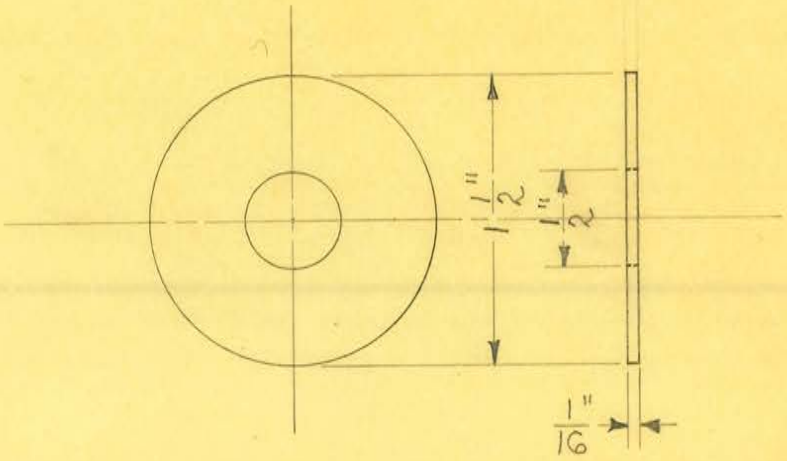


2 REQUIRED

OBSOLETE

| | | | |
|---|---|---|---|
| SIZE | #5030 1/2 | ISSUE 12-10-36 | A.E. |
| KIND | 1/16" BLACK FELT | CHANGED | |
| SHAPE | SHEET | " | |
| FINISH | | " | |
| TEMP. | | " | |
| PATT. | | " | |

**TITLE:** "CSWI" SEPARABLE BASE VACUUM TUBE & HOSE CONN. CUSHION WASHER

H. G. FISCHER & CO.
2335 WABANSIA AVE.
CHICAGO, ILL.

CAT. NO.

PART NO. 10173

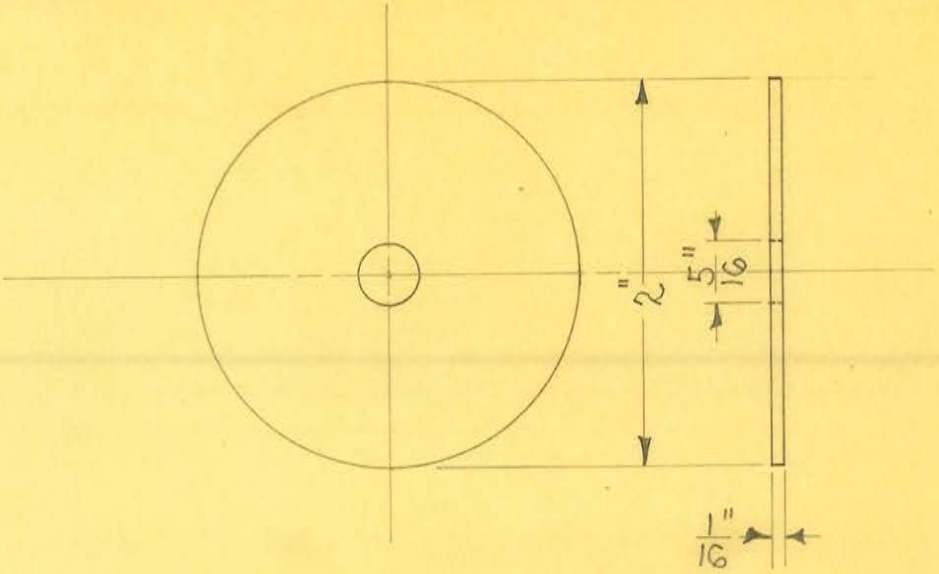


1 REQUIRED

OBSOLETE

| | | | |
|---|---|---|---|
| SIZE | #5030 1/2 | ISSUE 12-11-36 | 2/E. |
| KIND | 1/16" BLK. FELT | CHANGED | |
| SHAPE | SHEET | " | |
| FINISH | | " | |
| TEMP. | | " | |
| PATT. | | " | |

**TITLE:** "CSWI" SEPARABLE BASE - PRESSURE VALVE CUSHION WASHER

H. G. FISCHER & CO.
2335 WABANSIA AVE.
CHICAGO, ILL.

CAT. NO.

PART NO. 10174

FINE DIAMOND KNURL

ACTUAL SIZE

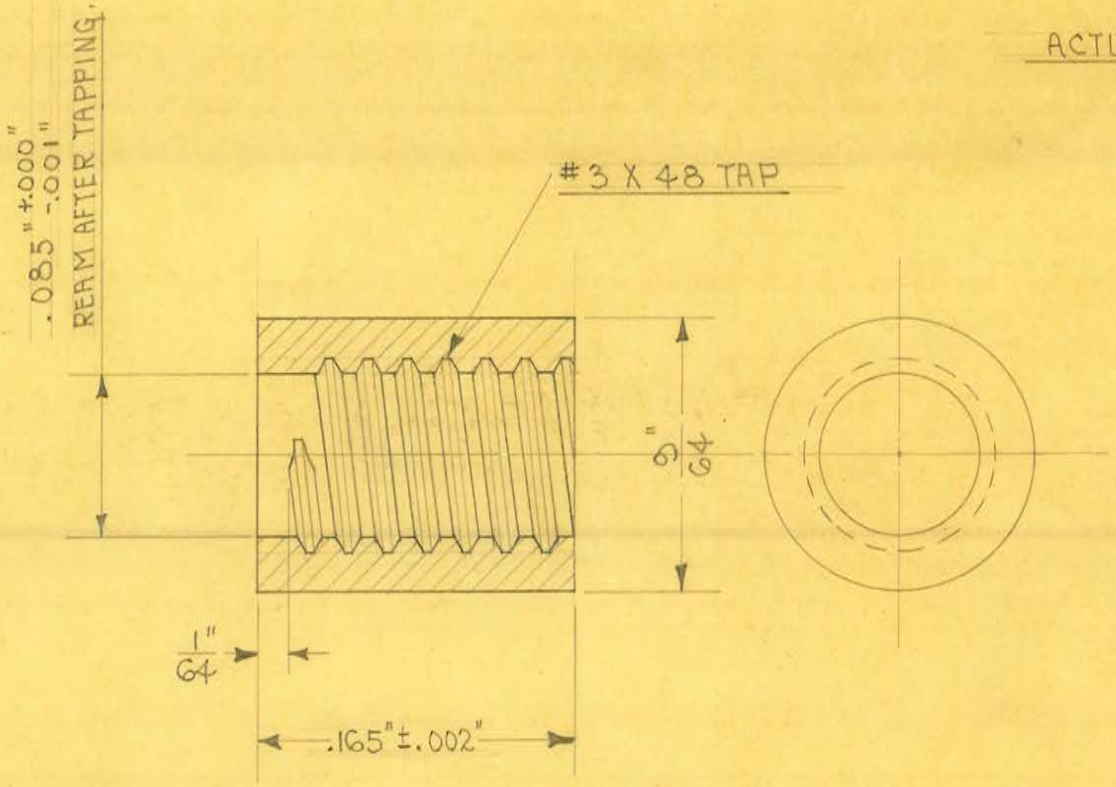


SCALE ≈ 10 DIAMETERS

4 REQUIRED

OBSOLETE

OBSOLETE 11/23/62 RCT

NOTE:-

THESE INSERTS FURNISHED BY CHICAGO MOLDED PRODUCTS CO. - INSERT #22

| | | | |
|---|---|---|---|
| SIZE | 9/64" DIAM. | ISSUE 7-2-36 | A.E. |
| KIND | BRASS ROD | CHANGED | |
| SHAPE | | " | |
| FINISH | | " | |
| TEMP. | | " | |
| PATT. | | " | |

**TITLE:** REMOTE HAND CONTROL SWITCH - CONTACT SPRING HOLDER INSERT

| | | |
|---|---|---|
| H. G. FISCHER & CO. 2335 WABANSIA AVE. CHICAGO, ILL. | CAT. NO. | PART NO. 10178 |

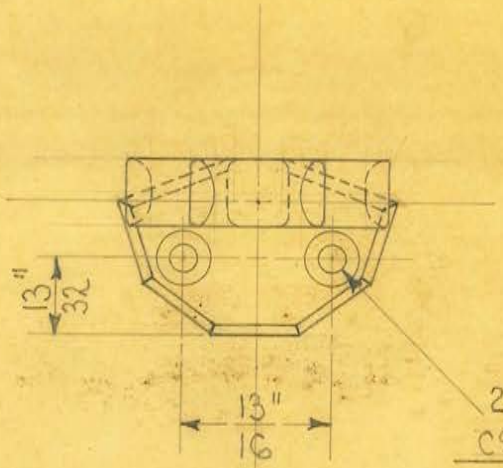


1 REQUIRED

OBSOLETE

obsolete

| | | | |
|---|---|---|---|
| SIZE | | ISSUE 7-6-36 | H.E. |
| KIND | BRASS CASTING | CHANGED | |
| SHAPE | | " | |
| FINISH | CHROME #2 | " | |
| TEMP. | | " | |
| PATT. | 1804-964 | " | |

**TITLE:** REMOTE HAND CONTROL SWITCH-HOLDER

H. G. FISCHER & CO.
2335 WABANSIA AVE.
CHICAGO, ILL.

CAT. NO.

PART NO. 10180F

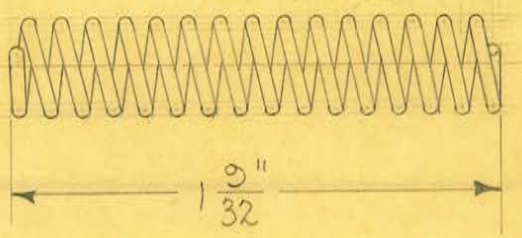


1 REQUIRED

12 TURNS PER INCH

WOUND ON 5/32" ROD

SCALE ÷ 2 DIAMETERS

OBSOLETE

OBSOLETE 11/23/62 RCT

| | | | | |
|---|---|---|---|---|
| SIZE | .030" TINNED | ISSUE 7-3-36 | A.E. | TITLE: REMOTE HAND CONTROL SWITCH CONTACT BUTTON SPRING |
| KIND | MUSIC WIRE | CHANGED | | |
| SHAPE | | " | | |
| FINISH | | " | | |
| TEMP. | | " | | |
| PATT. | | " | | |

| | | |
|---|---|---|
| H. G. FISCHER & CO. 2335 WABANSIA AVE. CHICAGO, ILL. | CAT. NO. | PART NO. 10184 |

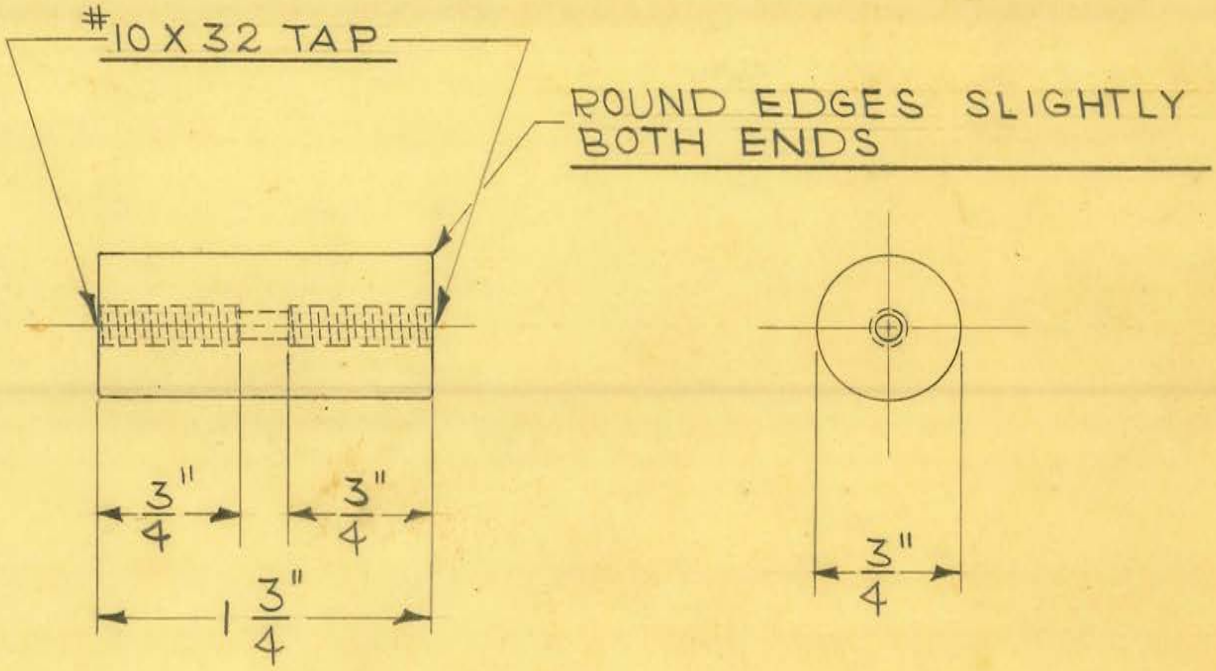


OBSOLETE

2 REQUIRED

| DIMENSIONS | |
|---|---|
| FRACTIONAL | ± .015 |
| DECIMAL | ± .005 |
| ANGULAR | ± 1/2° |

UNLESS OTHERWISE SPECIFIED

| | | | |
|---|---|---|---|
| SIZE | 3/4" DIA. | ISSUE 6-9-48 | W.J. |
| KIND | C.R. STEEL | CHANGED | |
| SHAPE | ROD | " | |
| FINISH | CAD. #23 | " | |
| TEMP. | | " | |
| PATT. | | " | |

**TITLE:**
FISCHER RADIOGRAPHIC TILT TABLE
BUCKY BUMPER SUPPORT ROD

H. G. FISCHER & CO.
2335 WABANSIA AVE.
CHICAGO, ILL.

CAT. NO.

PART NO. 10189

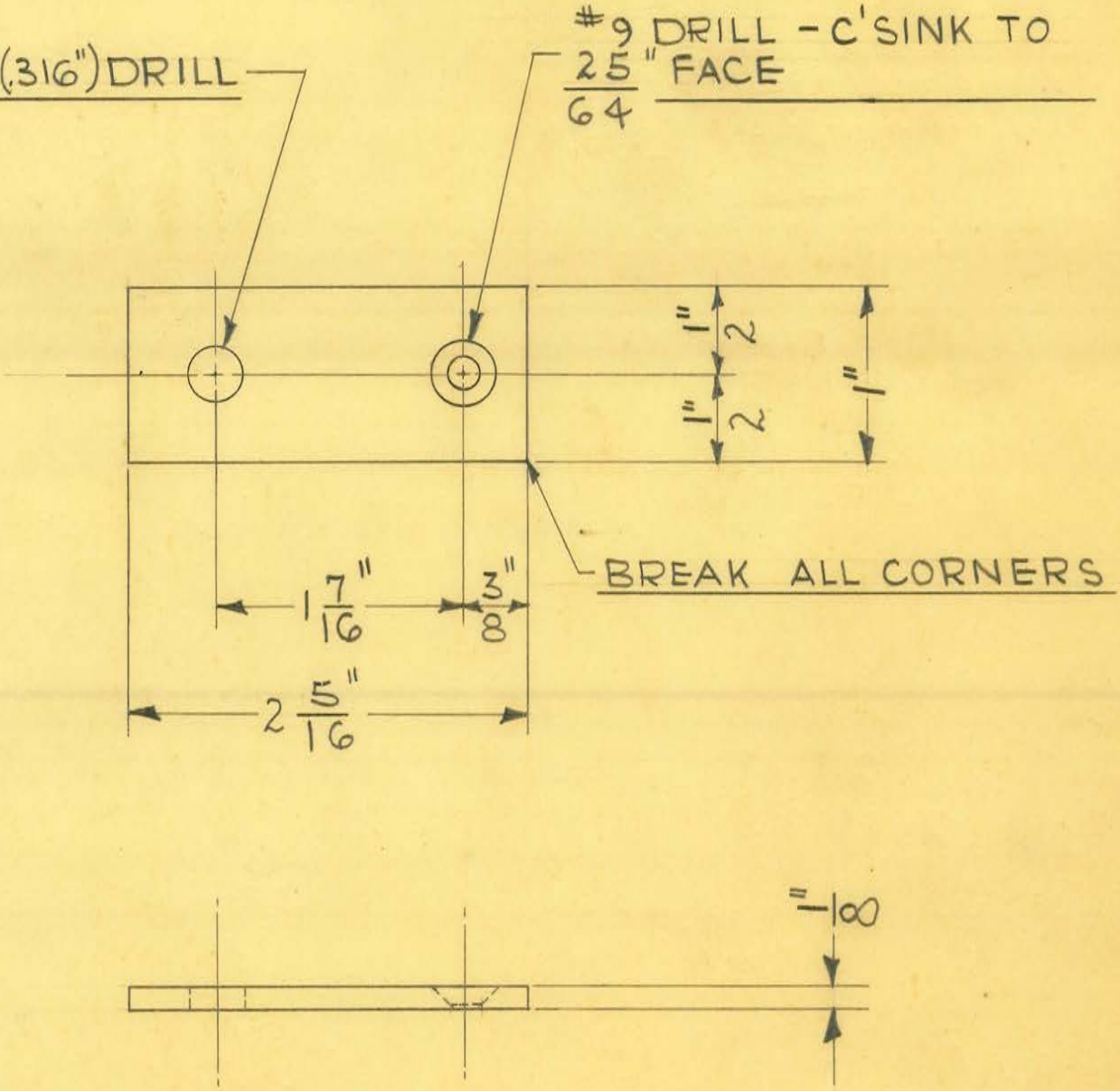


OBSOLETE

2 REQUIRED

DRILL JIG TOOL # 9838

| DIMENSIONS | |
|---|---|
| FRACTIONAL | ± .015 |
| DECIMAL | ± .005 |
| ANGULAR | ± 1/2° |

UNLESS OTHERWISE SPECIFIED

| | | | | |
|---|---|---|---|---|
| SIZE | 1" X 1/8" | ISSUE 6-8-48 | W.J. | TITLE: FISCHER RADIOGRAPHIC TILT TABLE BUCKY BUMPER SUPPORT PLATE |
| KIND | C.R. STEEL | CHANGED | | |
| SHAPE | BAR | " | | |
| FINISH | CAD. #23 | " | | |
| TEMP. | | " | | |
| PATT. | | " | | |

H. G. FISCHER & CO.
2335 WABANSIA AVE.
CHICAGO, ILL.

CAT. NO.

PART NO. 10190

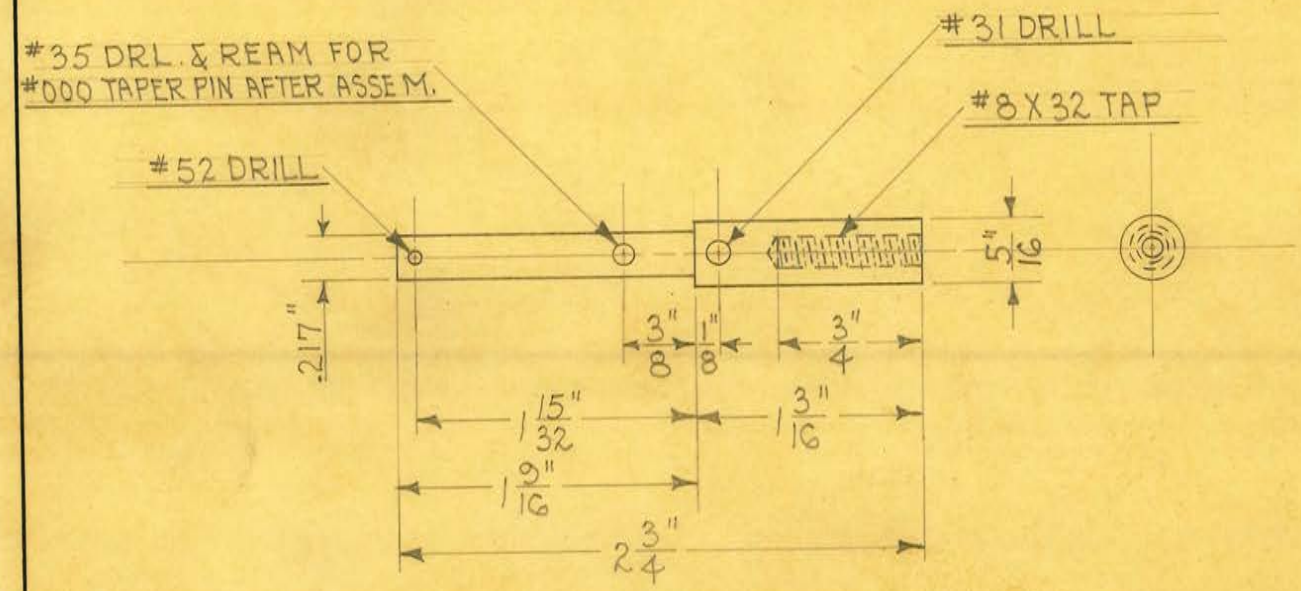


1 REQUIRED

OBSOLETE

| | | | | |
|---|---|---|---|---|
| SIZE | 5/16" DIA. | ISSUE 8-3-36 | 9.8. | TITLE: 10 POINT SWITCH MAIN SHAFT |
| KIND | C.R. STEEL | CHANGED | | |
| SHAPE | | " | | |
| FINISH | DU-LITE #8 | " | | |
| TEMP. | | " | | |
| PATT. | | " | | |

H. G. FISCHER & CO.
2335 WABANSIA AVE.
CHICAGO, ILL.

CAT. NO.

PART NO. 10202

OBSOLETE
3/20/68
USE 10203 B RCT

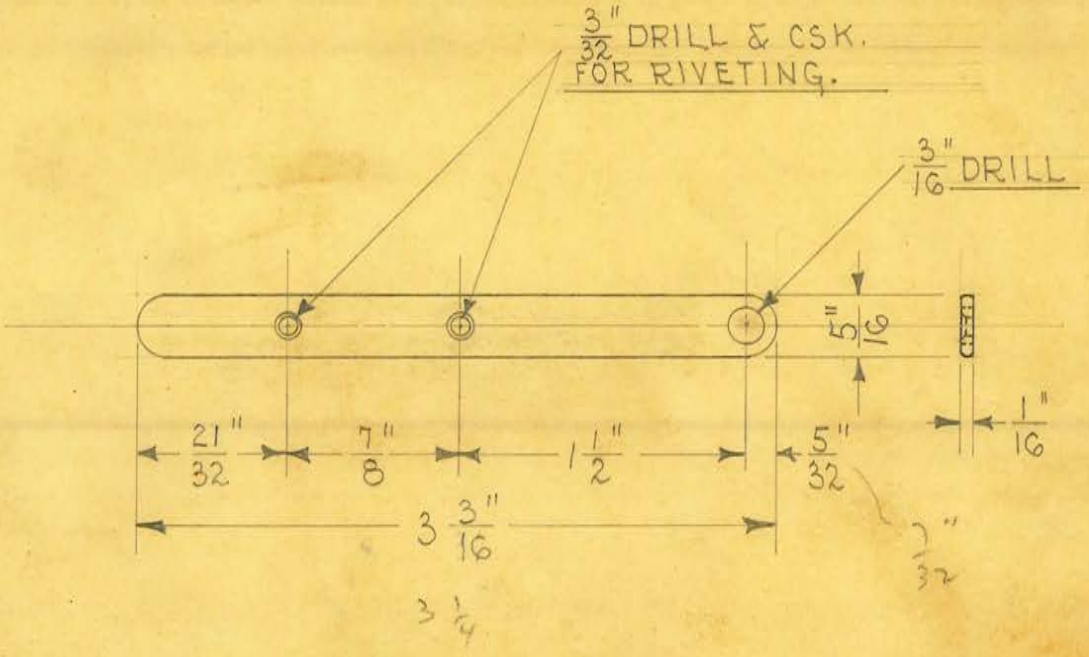


2 REQUIRED

OBSOLETE

| | | | |
|---|---|---|---|
| SIZE | 1/16" X 5/16" | ISSUE 7-14-36 | A.E. |
| KIND | FLAT WIRE | CHANGED | |
| SHAPE | | " | |
| FINISH | CAD.#23 | " | |
| TEMP. | | " | |
| PATT. | | " | |

**TITLE:** 10 POINT SWITCH ROLLER SUPPORT

H. G. FISCHER & CO.
2338 WABANSIA AVE.
CHICAGO, ILL.

CAT. NO.

PART NO. 10203

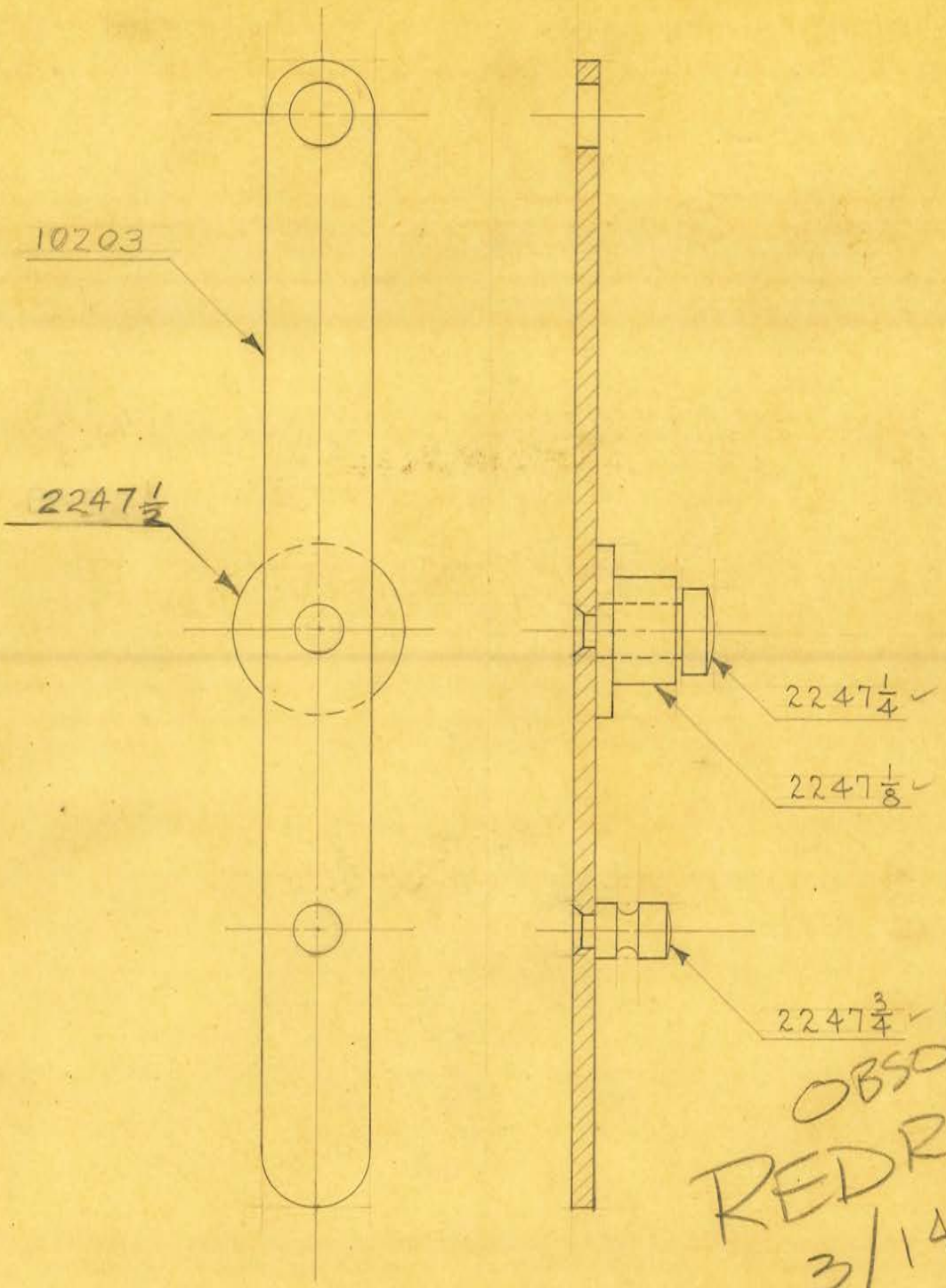


OBSOLETE
REDRAWN
3/14/68
RCT

SCALE ~ 1" = 1/2"
2 REQUIRED

| | | | |
|---|---|---|---|
| SIZE | | ISSUE 7-15-36 | A.B. |
| KIND | | CHANGED | |
| SHAPE | | " | |
| FINISH | | " | |
| TEMP. | | " | |
| PATT. | | " | |

**TITLE:** 10 POINT SWITCH ROLLER SUPPORT ASSEM.

H. G. FISCHER & CO.
2335 WABANSIA AVE.
CHICAGO, ILL.

CAT. NO.

PART NO. 10203G

| TITLE | H. G. FISCHER & CO. | PART NO. |
|---|---|---|
| 10 POINT SWITCH ROLLER SUPPORT | FRANKLIN PARK, ILLINOIS | 10203B |

| DATE | DR BY | CH'K'D |
|---|---|---|
| 3-1-56 | C.E.K. | J.V.W. |

| REVISION | DATE | BY |
|---|---|---|
| B. REMOVED C'SINKING | 5-15-67 | B.K. |

| PATTERN | FINISH | SCALE |
|---|---|---|
| | CAD. #23 | FULL |

DIMENSIONS
FRACTIONAL ± .015
DECIMAL ± .005
ANGULAR ± ½°
UNLESS OTHERWISE SPECIFIED

TOOLS: PIERCE & CUT-OFF DIE #12402

MATERIAL: 1/16" X 5/16" FLAT WIRE

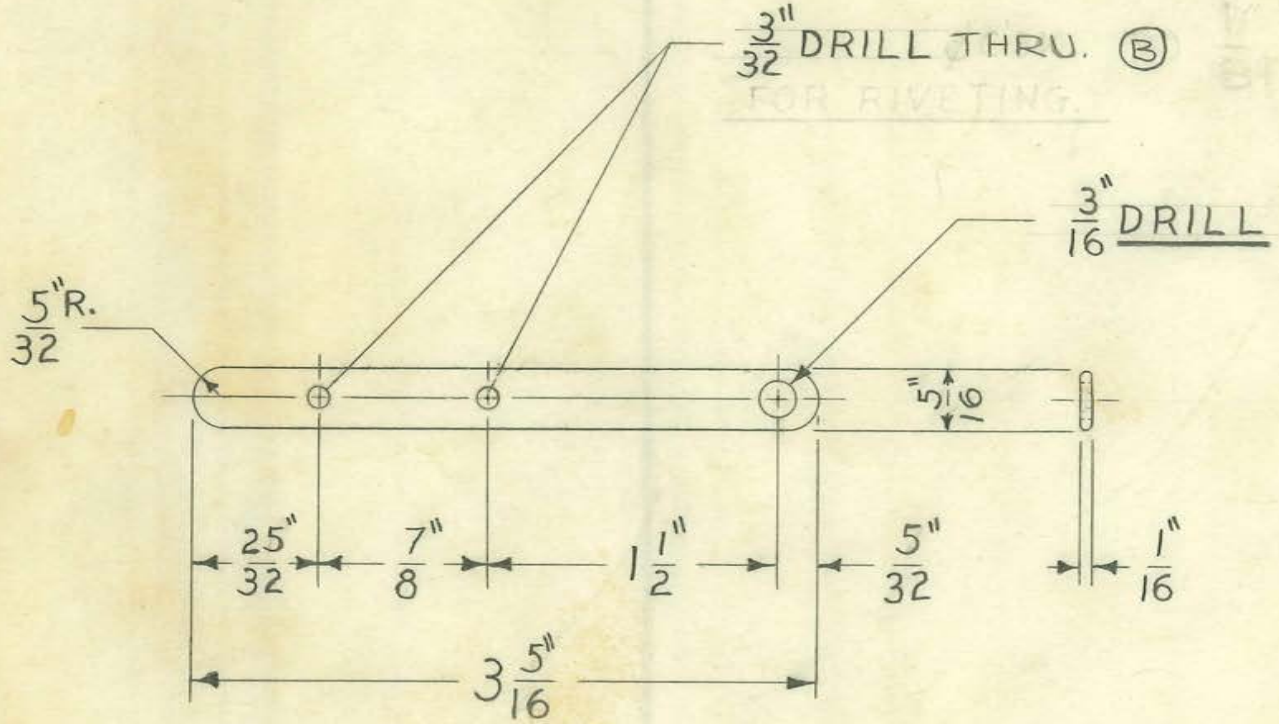


2 REQUIRED

OBSOLETE
Use 10203C
Bull # 789
2-14-69
MZ

FOLDER # 78

6 HLS. (.104) DIA. PUNCH

2 HLS. CSK
FOR #3 X 48 F. HD. SCR.

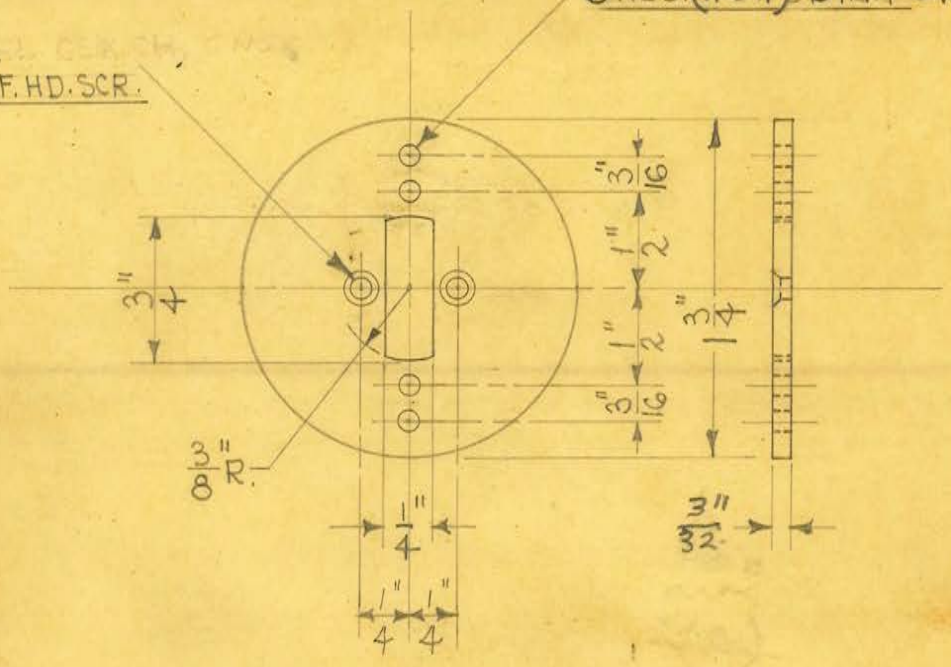


OBSOLETE
USE 10206A
2-14-69

PERF & BLANK DIE
# 14616

| | | | |
|---|---|---|---|
| SIZE | 3/32" BLACK | ISSUE 7-15-36 | A.E. |
| KIND | CANVAS BASE | CHANGED | |
| SHAPE | BAKELITE | " | |
| FINISH | | " | |
| TEMP. | | " | |
| PATT. | | " | |

**TITLE:** 10 POINT SWITCH CONTACT SET MOUNTING DISC

| | | |
|---|---|---|
| H. G. FISCHER & CO. 2335 WABANSIA AVE. CHICAGO, ILL. | CAT. NO. | PART NO. 10206 |

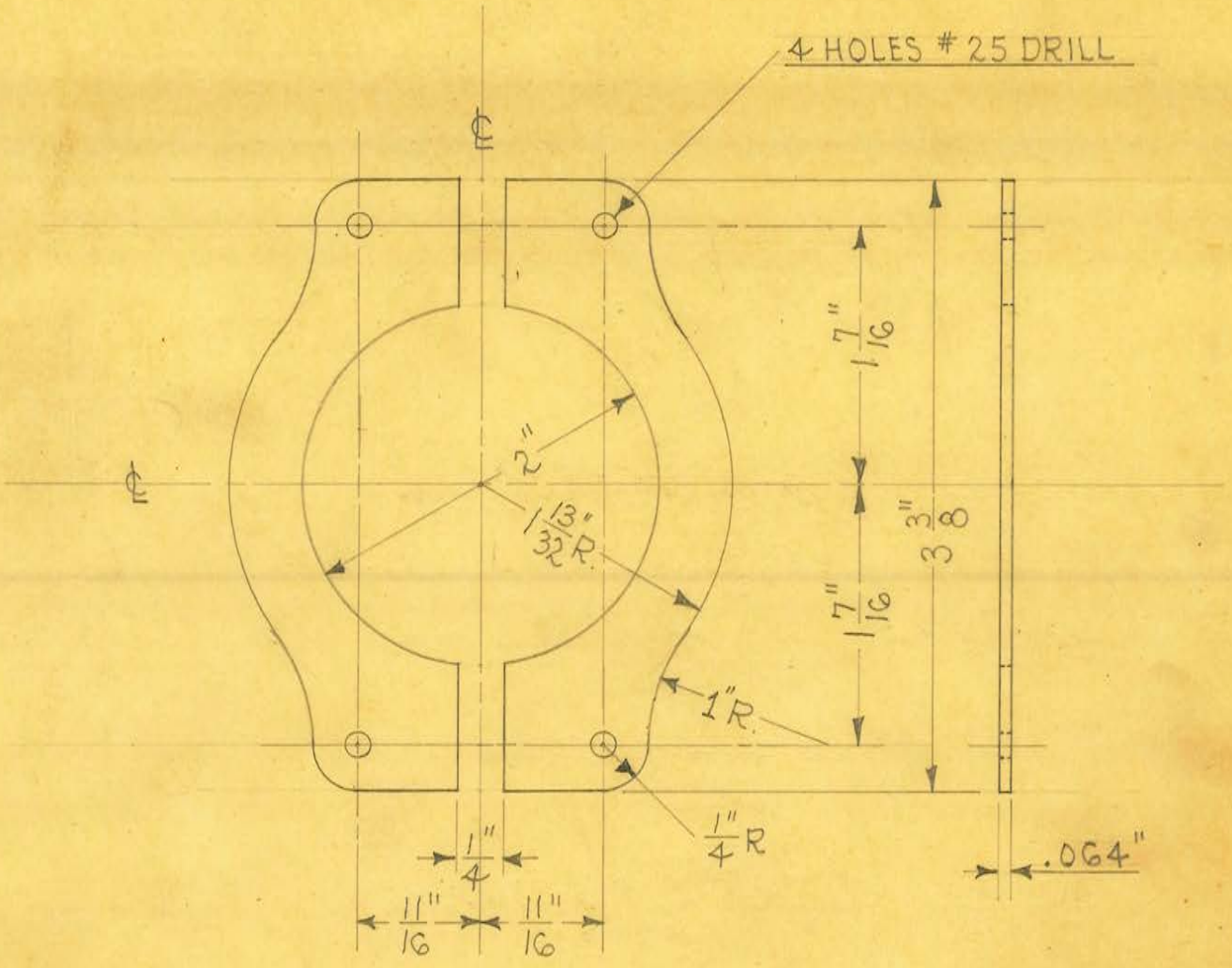


1 REQUIRED

OBSOLETE

| | | | | |
|---|---|---|---|---|
| SIZE | #14 B. & S. GA. | ISSUE | 7-14-36 | A.E. |
| KIND | H.H. SHEET BRASS | CHANGED | | |
| SHAPE | | " | | |
| FINISH | | " | | |
| TEMP. | | " | | |
| PATT. | | " | | |

**TITLE:** 10 POINT SWITCH CONTACT RING - SET

| | | |
|---|---|---|
| H. G. FISCHER & CO. 2335 WABANSIA AVE. CHICAGO, ILL. | CAT. NO. | PART NO. 10207 |

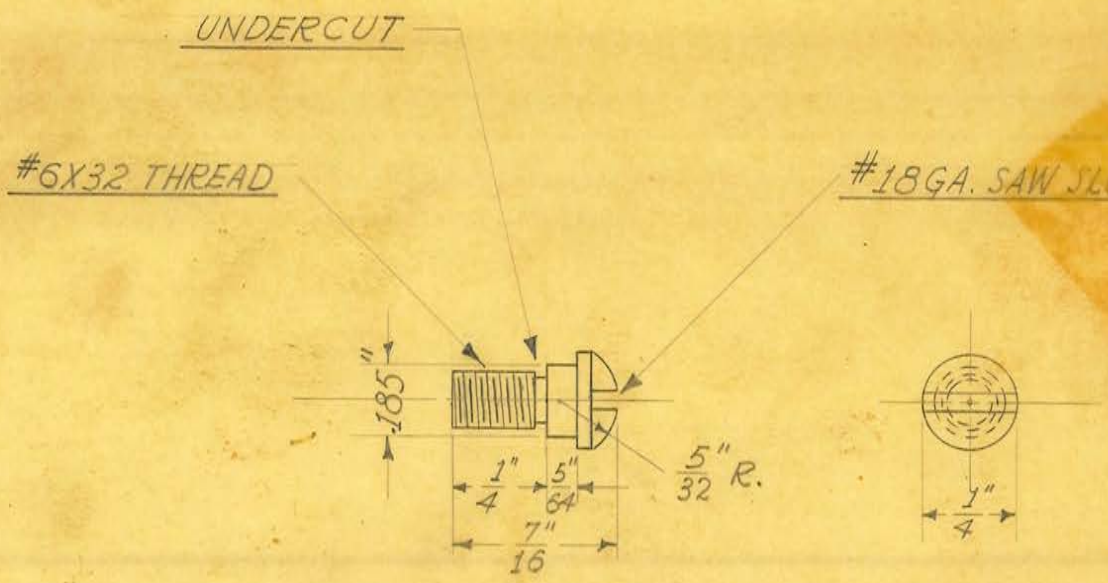


SCALE: 2 DIA.

2 REQUIRED

OBSOLETE
9-17-68
CLL

| | | | |
|---|---|---|---|
| SIZE | 1/4" DIA. | ISSUE 9-4-36 | J.W. |
| KIND | BRASS ROD | CHANGED | |
| SHAPE | | " | |
| FINISH | | " | |
| TEMP. | | " | |
| PATT. | | " | |

RS.

**TITLE:** 10 POINT SWITCH - ROLLER SUPPORT SCREW

H. G. FISCHER & CO.
2335 WABANSIA AVE.
CHICAGO, ILL.

CAT. NO.

PART NO. 10208

TITLE

# FISCHER MULTI-SERVICE TUBESTAND MAGNETIC LOCK WIRING DIAGRAM

H. G. FISCHER & CO.
FRANKLIN PARK, ILLINOIS

DATE 9-14-62 | DR BY PRM | CH'K'D.

PART NO. H 102110

| REVISION | DATE | BY |
|---|---|---|
| OBSOLETE | | |

PATTERN | FINISH | SCALE #

TOOLS | MATERIAL

DIMENSIONS UNLESS OTHERWISE SPECIFIED
FRACTIONAL ± .015
DECIMAL ± .005
ANGULAR ± ½°

NOTE:
2- MAG. LOCKS WILL DRAW APROX. 440 M.A. @ 20 VOLTS D.C. - EACH LOCK WILL DRAW APROX. 220 M.A. @ 20 V. D.C.

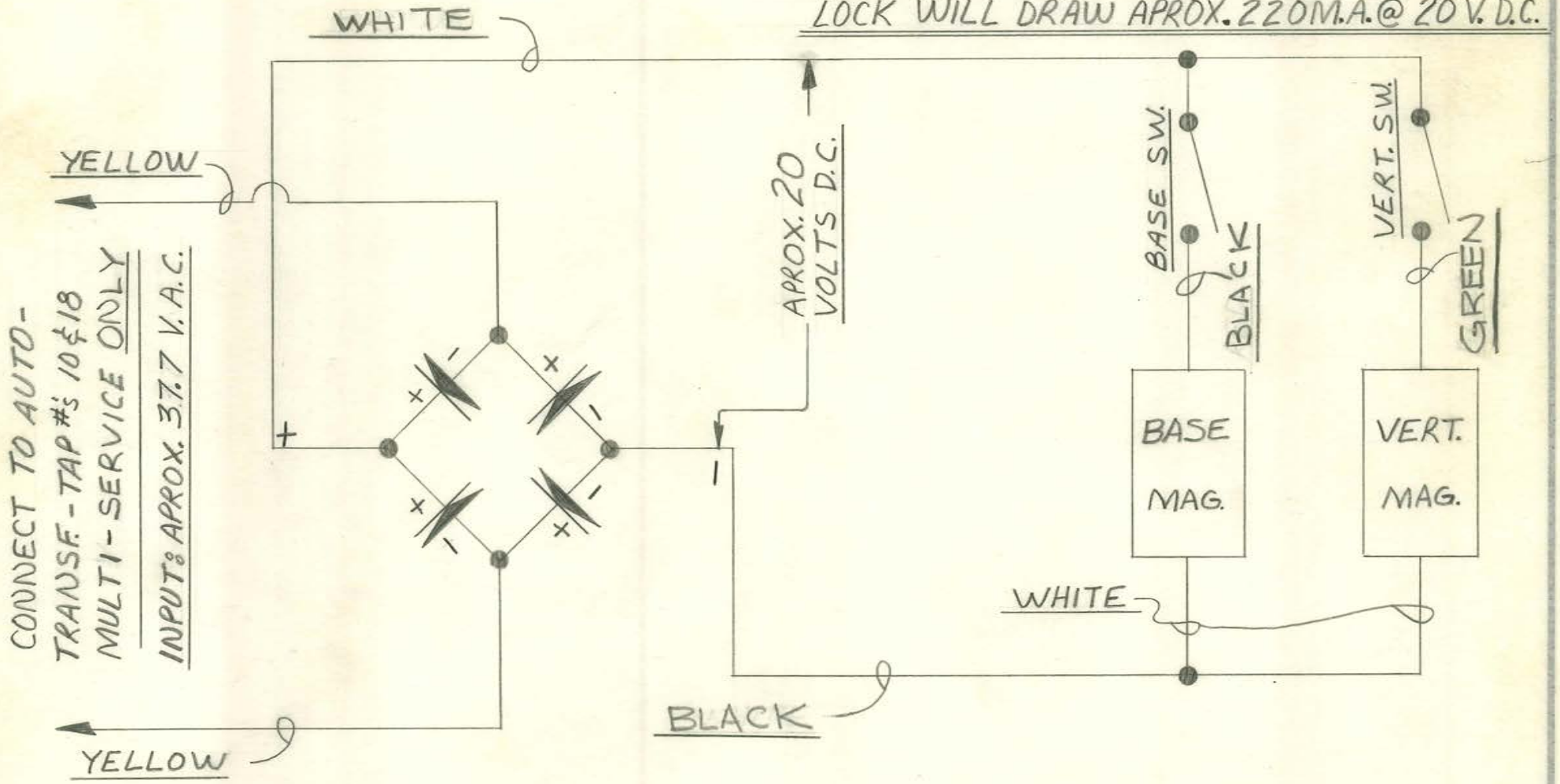

TITLE: SCREW # 10-32 × ½ SOC HD.

**H. G. FISCHER, INC.**
FRANKLIN PARK, ILLINOIS

PART No. 10212

DATE: 8-8-75 | DR. BY: R. R. | CH'K'D:

REVISION: A) ECO # 0499 / 9-23-75 / RR

FINISH:

SCALE:

MATERIAL:

DIMENSIONS UNLESS OTHERWISE SPECIFIED
.X ± .030
.XX ± .010
.XXX ± .005
ANGULAR ± 1/2°

SCREW TYPE CAP

HEAD STYLE SOCKET

NOM. THREAD DIA. #10 (.190)

THREADS/INCH 32

SCREW LENGTH 1/2

HEAD DIA. .312 MAX DIA

HEAD HEIGHT .190-.185

HEAD SLOT —

HEX. SOCKET SIZE 5/32"

POINT STYLE —

MATERIAL STEEL

FINISH CAD. #123

OBS / JF 6-14-79
ECO 1706

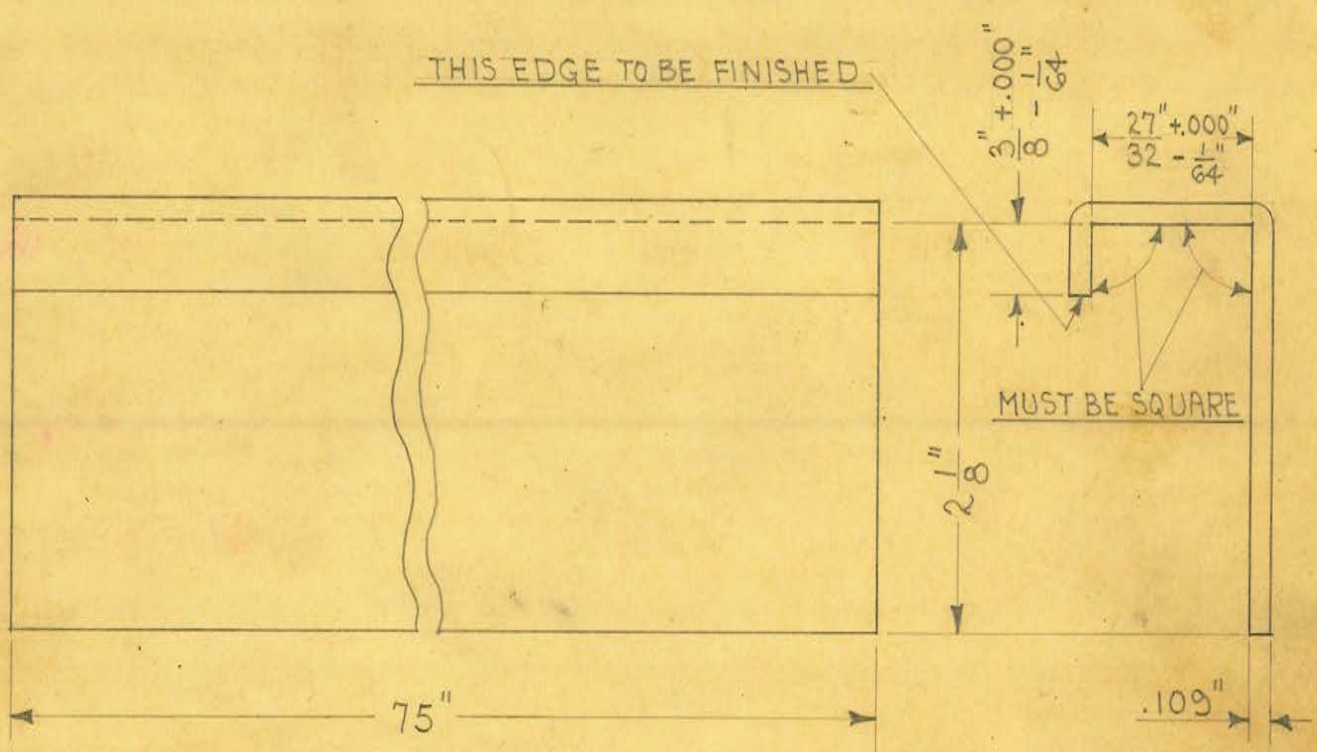


OBSOLETE

MATERIAL

#12 GA. (.1046") COLD ROLLED STEEL

Obsolete 1-24-51

| | | | | | |
|---|---|---|---|---|---|
| SIZE | | ISSUE 10-20-36 | A.E. | TITLE: TILT TABLE SIDE CHANNEL | |
| KIND | | CHANGED | | | |
| SHAPE | | " | | | |
| FINISH | | " | | | |
| TEMP. | | " | | | |
| PATT. | | " | | | |

| | | |
|---|---|---|
| H. G. FISCHER & CO. 2335 WABANSIA AVE. CHICAGO, ILL. | CAT. NO. | PART NO. 10246 |

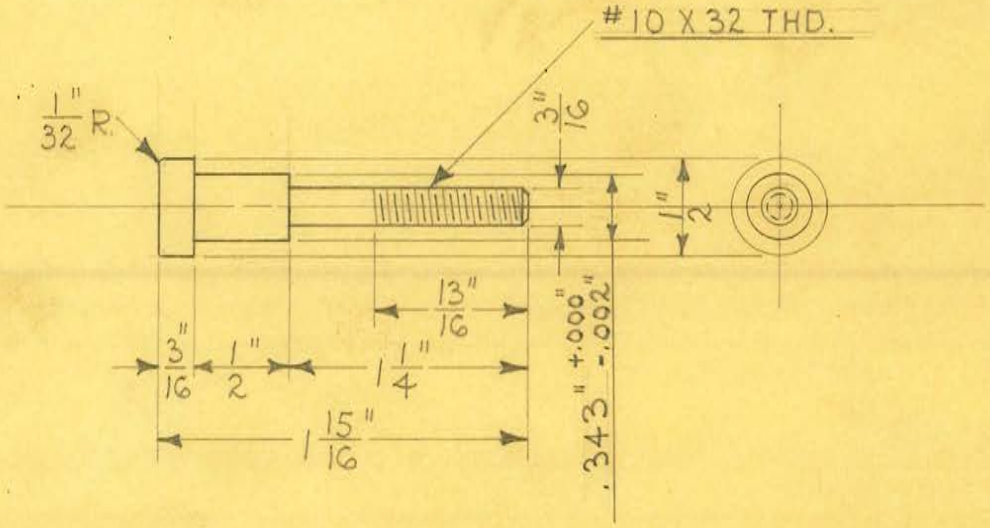


2 REQUIRED

TOLERANCE ON ALL FRACTIONAL DIMS. ±.005"

OBSOLETE

| | | | |
|---|---|---|---|
| SIZE | 1/2" DIAM. | ISSUE 11-19-36 | A.E. |
| KIND | SCREW STOCK | CHANGED | |
| SHAPE | | " | |
| FINISH | CAD. #23 | " | |
| TEMP. | | " | |
| PATT. | | " | |

**TITLE:** TILT TABLE FOOT & SHOULDER SUPPORT SPRING STUD

H. G. FISCHER & CO.
2335 WABANSIA AVE.
CHICAGO, ILL.

CAT. NO.

PART NO. 10273

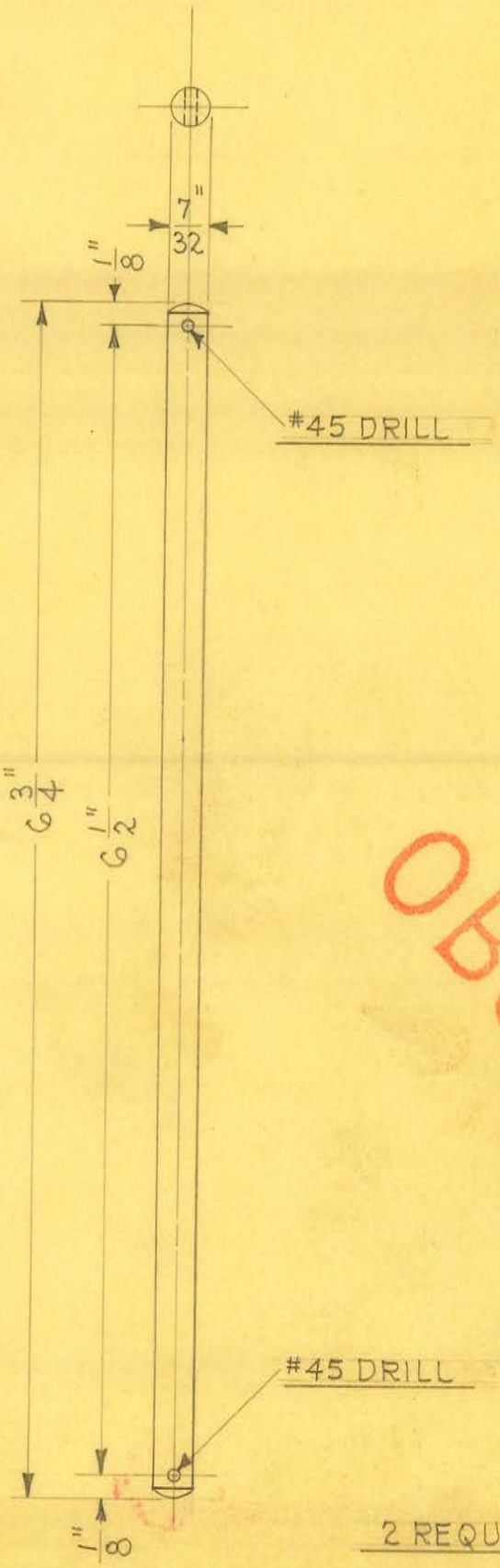


OBSOLETE

2 REQUIRED

| | | | |
|---|---|---|---|
| SIZE | 7/32" DIAM. | ISSUE 11-19-36 | A.E. |
| KIND | SCREW STOCK | CHANGED | |
| SHAPE | | " | |
| FINISH | CAD. #23 | " | |
| TEMP. | | " | |
| PATT. | | " | |

**TITLE:** TILT TABLE FOOT & SHOULDER SUPPORT HINGE SHAFT

H. G. FISCHER & CO.
2335 WABANSIA AVE.
CHICAGO, ILL.

CAT. NO.

PART NO. 10274

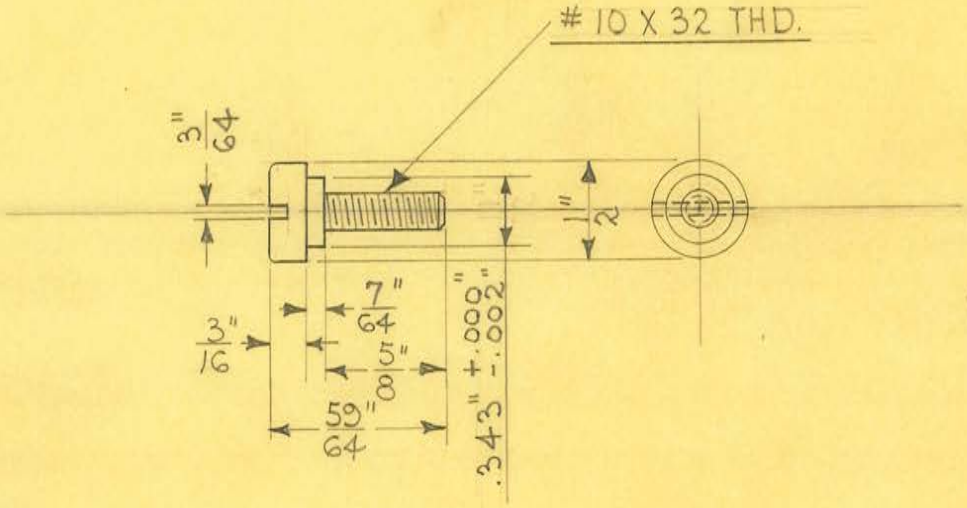


2 REQUIRED

TOLERANCE ON ALL FRACTIONAL DIMS. ±.005"

OBSOLETE

| | | | |
|---|---|---|---|
| SIZE | ½" DIAM. | ISSUE 11-19-36 | A.E. |
| KIND | SCREW STOCK | CHANGED | |
| SHAPE | | " | |
| FINISH | CAD. #23 | " | |
| TEMP. | | " | |
| PATT. | | " | |

**TITLE:** TILT TABLE FOOT & SHOULDER SUPPORT STATIONARY STUD

H. G. FISCHER & CO.
2335 WABANSIA AVE.
CHICAGO, ILL.

CAT. NO.

PART NO. 10276

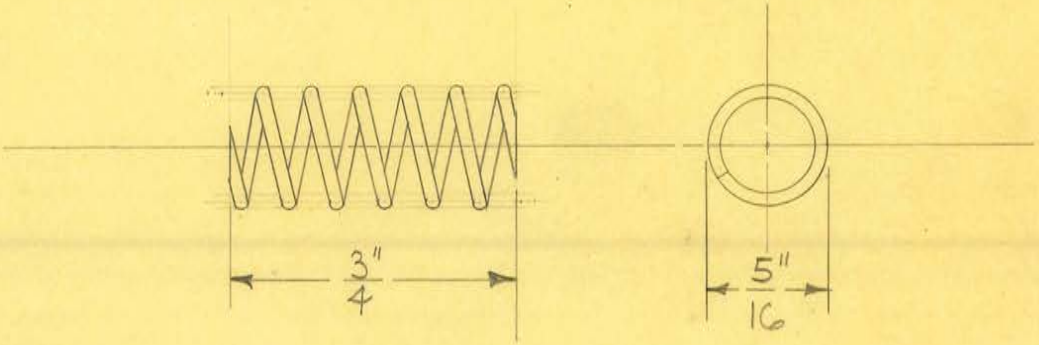


8 TURNS PER INCH
WOUND ON 7/32" MANDREL
SCALE ÷ 1" = 1/2"
2 REQUIRED

OBSOLETE

| | | | | |
|---|---|---|---|---|
| SIZE | .031" | ISSUE 11-20-36 | A.E. | TITLE: TILT TABLE FOOT & SHOULDER SUPPORT SPRING |
| KIND | MUSIC WIRE | CHANGED | | |
| SHAPE | | " | | |
| FINISH | | " | | |
| TEMP. | | " | | |
| PATT. | | " | | |

H. G. FISCHER & CO.
2335 WABANSIA AVE.
CHICAGO, ILL.

CAT. NO.

PART NO. 10277

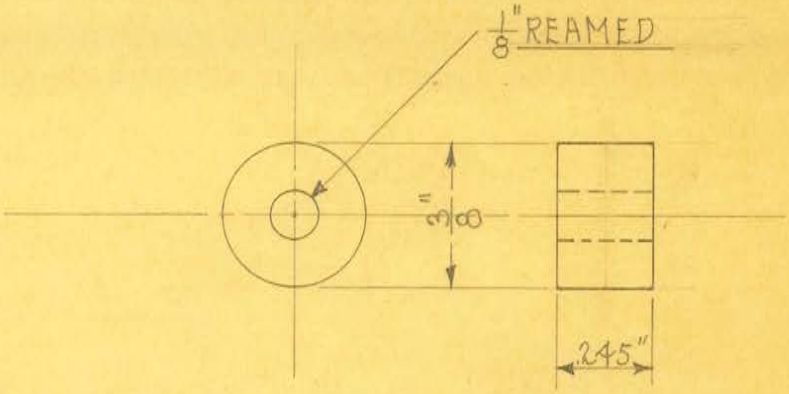


1 REQUIRED

SCALE ~ DOUBLE SIZE

OBSOLETE

| | | | | |
|---|---|---|---|---|
| SIZE | 3/8" ROD | ISSUE 6-27-33 | A.E. | TITLE: UNIVERSAL "60-88" TUBE STAND FRICTION LOCK PIN ROLLER |
| KIND | C.R. STEEL | CHANGED | | |
| SHAPE | | " " | | |
| FINISH | | " " | | |
| TEMP. | | " " | | H. G. FISCHER & CO. 2335 WABANSIA AVE. CHICAGO, ILL. — CAT. NO. — PART NO. 8142 |
| PATT. | | " " | | |

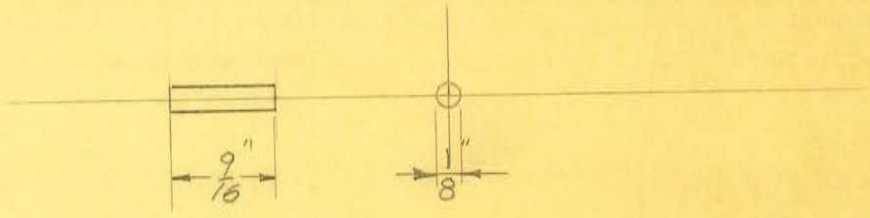


ONE REQUIRED

OBSOLETE

| | | | |
|---|---|---|---|
| SIZE | 1/8" ROD | ISSUE 10-24-33 | N.P. |
| KIND | C.R. STEEL | CHANGED | |
| SHAPE | | " | |
| FINISH | | " | |
| TEMP. | | " | |
| PATT. | | " | |

**TITLE:** UNIVERSAL "60-88" TUBE STAND FRICTION LOCK PIN ROLLER PIN

H. G. FISCHER & CO.
2335 WABANSIA AVE.
CHICAGO, ILL.

CAT. NO.

PART NO. 8143

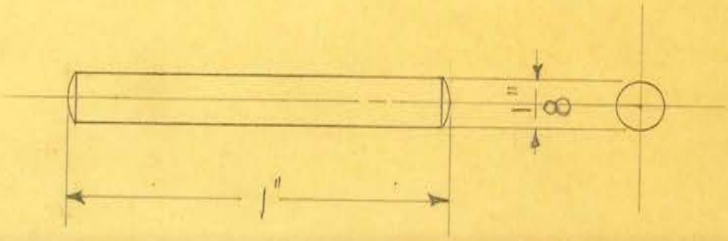


1 REQUIRED

SCALE ÷ DOUBLE SIZE

OBSOLETE

| | | | | |
|---|---|---|---|---|
| SIZE | 1/8" ROD | ISSUE 6-27-33 | A.E. | TITLE: UNIVERSAL "60-88" TUBE STAND FRICTION LOCK PIN - GUIDE PIN |
| KIND | C.R. STEEL | CHANGED | | |
| SHAPE | | " " | | |
| FINISH | | " " | | |
| TEMP. | | " " | | |
| PATT. | | " " | | |

H. G. FISCHER & CO.
2335 WABANSIA AVE.
CHICAGO, ILL.

CAT. NO.

PART NO. 8144

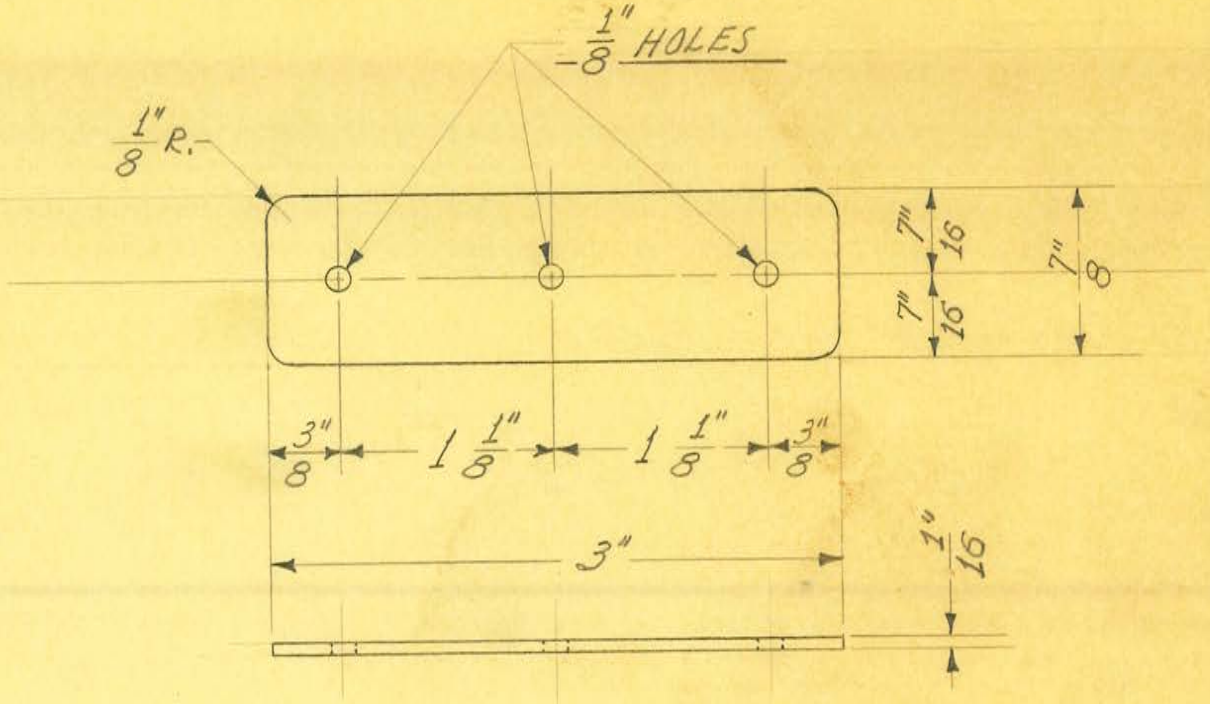


1 REQUIRED

OBSOLETE

| | | | |
|---|---|---|---|
| SIZE | 1/16" SHEET | ISSUE 12-1-37 | J.W. |
| KIND | VELUMOID | CHANGED | |
| SHAPE | | " | |
| FINISH | | " | |
| TEMP. | | " | |
| PATT. | | " | |

**TITLE:** "UNIVERSAL "60-88" TUBE STAND LOCK FRICTION BAR - FRICTION PIECE

H. G. FISCHER & CO.
2335 WABANSIA AVE.
CHICAGO, ILL.

CAT. NO.

PART NO. 8145 1/2

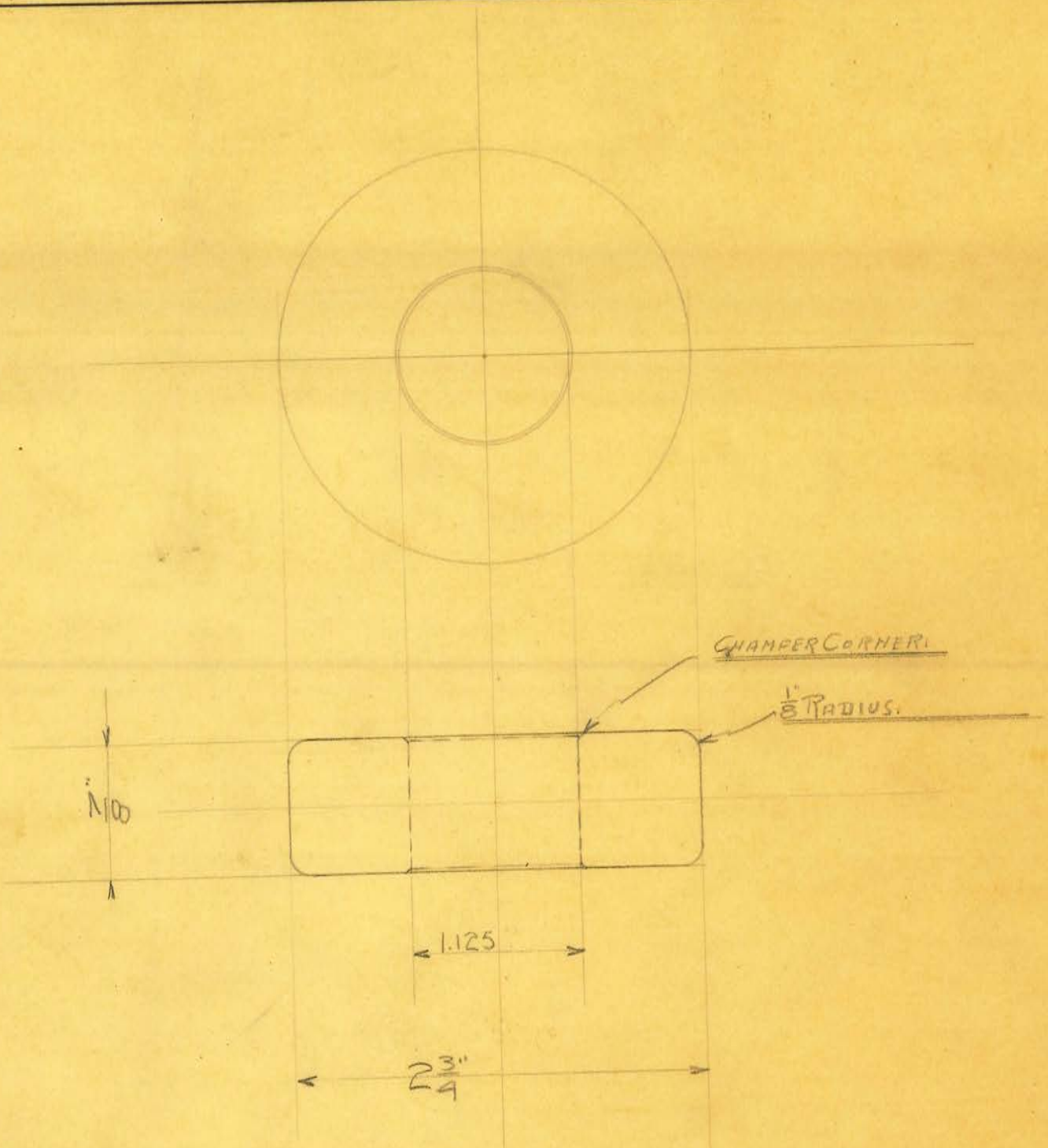


1-REQD

OBSOLETE

| | | | | | |
|---|---|---|---|---|---|
| SIZE | | ISSUE | | TITLE: UNIVERSAL "60-88" TUBE STAND LARGE ROLLER RIM | |
| KIND | C.R.S. STEEL | CHANGED | | | |
| SHAPE | | " " | | | |
| FINISH | CAD. PLATE | " " | | | |
| TEMP. | | " " | | H. G. FISCHER & CO. 2335 WABANSIA AVE. CHICAGO, ILL. | CAT. NO. |
| PATT. | | " " | | | PART NO. 8147 |

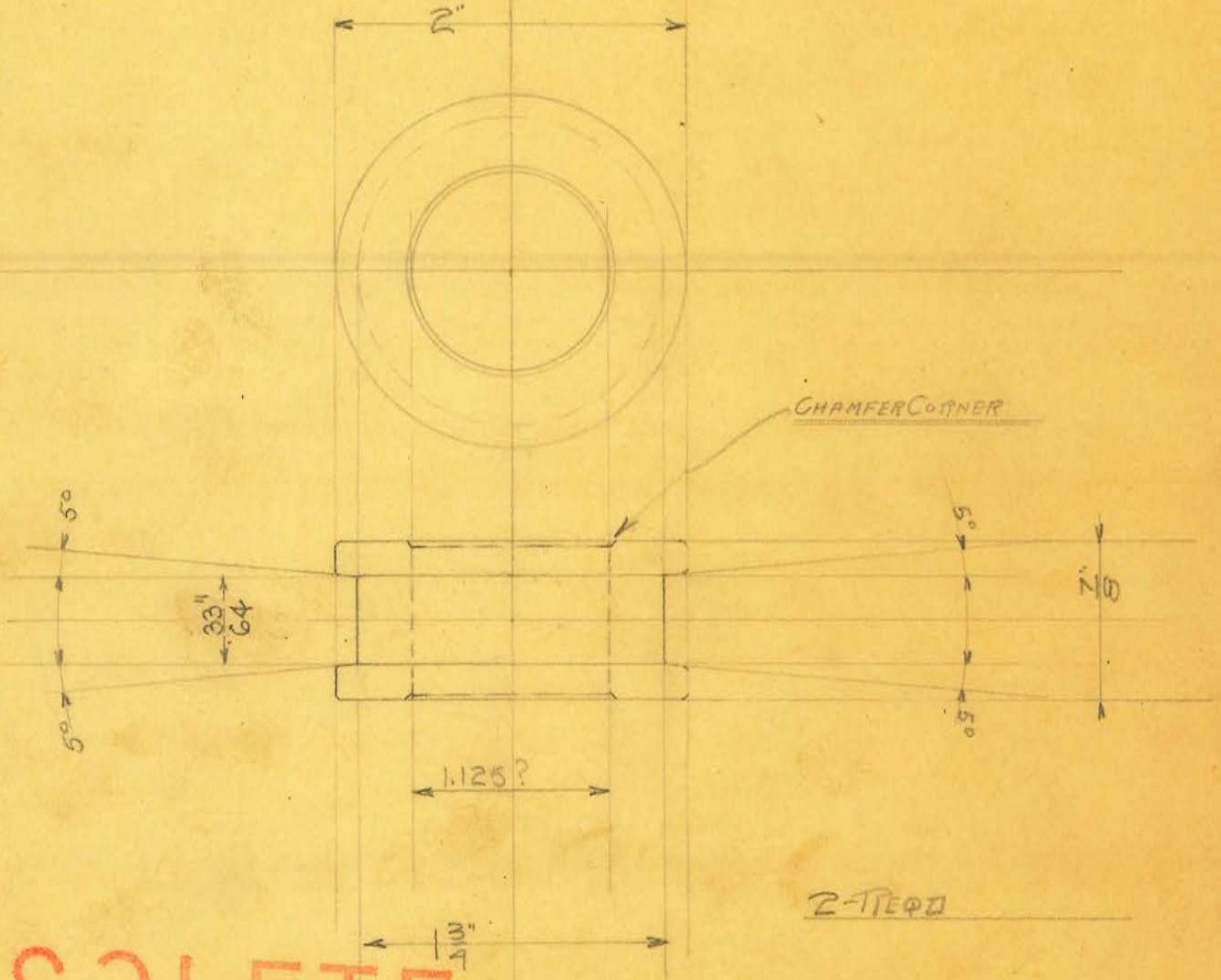


OBSOLETE

| | | | |
|---|---|---|---|
| SIZE | | ISSUE | |
| KIND | C.I.P. STEEL | CHANGED | |
| SHAPE | | " " | |
| FINISH | CAD. PLATE | " " | |
| TEMP. | | " " | |
| PATT. | | " " | |

**TITLE:**
UNIVERSAL "GO-88" TUBE STAND
SMALL ROLLER RIM

H. G. FISCHER & CO.
2335 WABANSIA AVE.
CHICAGO, ILL.

CAT. NO.

PART NO. 8150

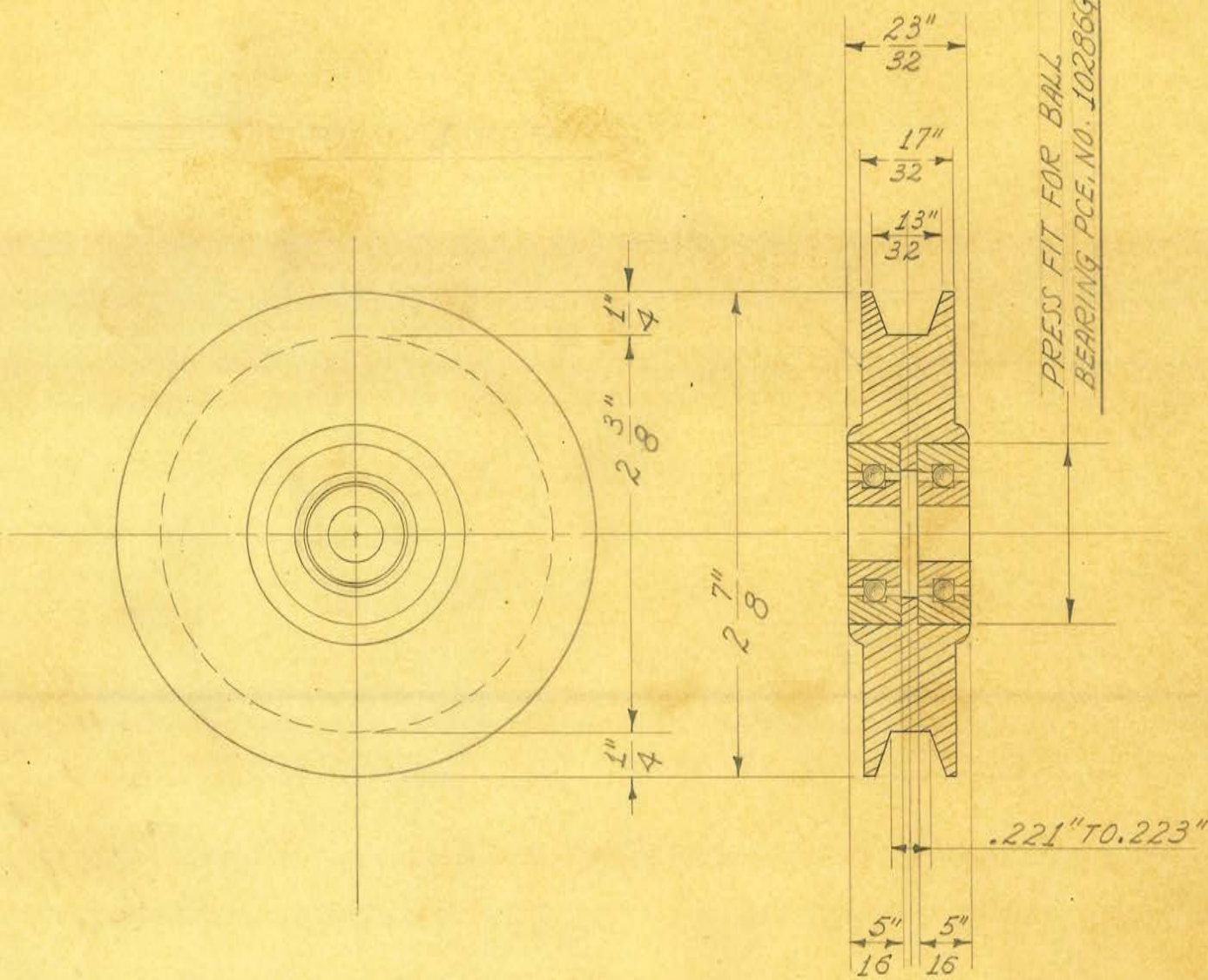


2 REQUIRED

OBSOLETE

| | | | |
|---|---|---|---|
| SIZE | | ISSUE 12-20-37 | |
| KIND | ALUM. CASTING | CHANGED | |
| SHAPE | | " | |
| FINISH | | " | |
| TEMP. | | " | |
| PATT. | 1394-1103 | " | |

**TITLE:**
UNIVERSAL "60-88" TUBE STAND CWT.
BALL BEARING PULLEY

H. G. FISCHER & CO.
2335 WABANSIA AVE.
CHICAGO, ILL.

CAT. NO.

PART NO. 8153GA

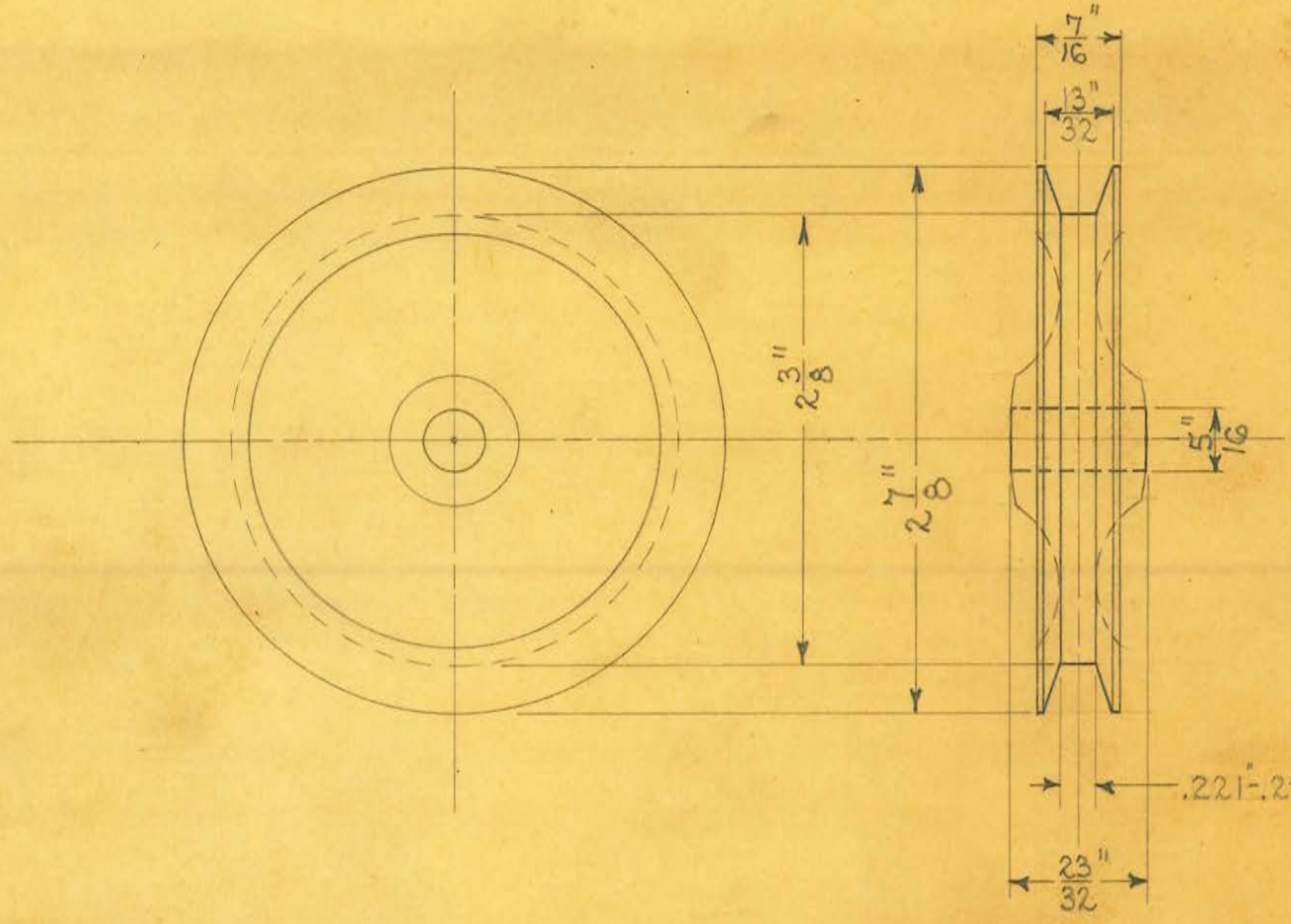


2 REQUIRED

OBSOLETE

Obsolete

| | | | |
|---|---|---|---|
| SIZE | | ISSUE 3-15-33 | H.E. |
| KIND | ALUM. CASTING | CHANGED | |
| SHAPE | | " " | |
| FINISH | | " " | |
| TEMP. | | " " | |
| PATT. | 4030-647 | " " | |

**TITLE:**
UNIVERSAL "60-88" TUBE STAND
COUNTERWEIGHT PULLEY

H. G. FISCHER & CO.
2335 WABANSIA AVE.
CHICAGO, ILL.

CAT. NO.

PART NO. 8153F

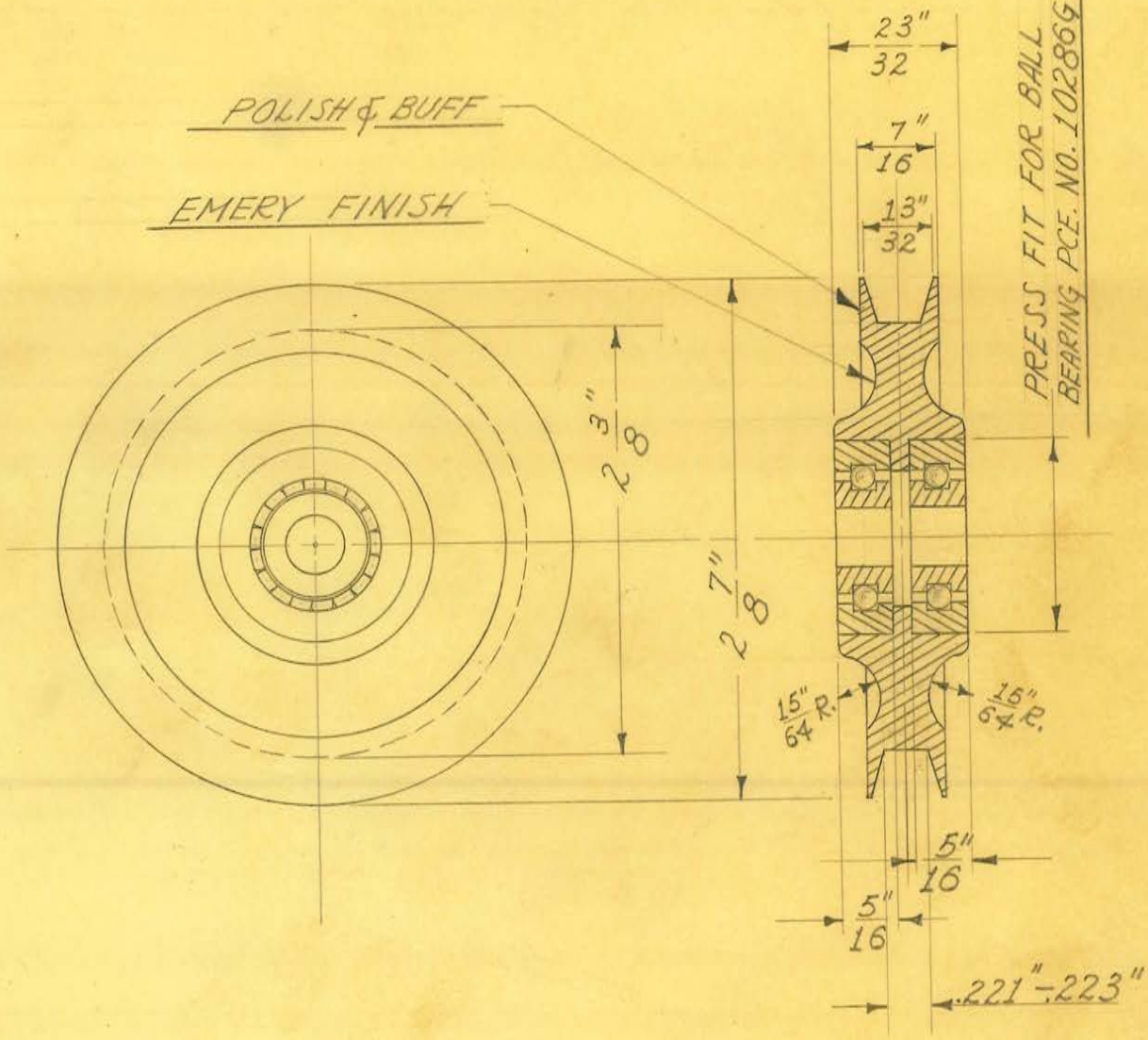


2 REQUIRED

OBSOLETE

obsolete

| | | | | |
|---|---|---|---|---|
| SIZE | | ISSUE 5-4-37 | J.W. | TITLE: UNIVERSAL "60-88" TUBE STAND CWT. BALL BEARING PULLEY |
| KIND | ALUM. CASTING | CHANGED | | |
| SHAPE | | " | | |
| FINISH | POL. & BUFF | " | | |
| TEMP. | | " | | |
| PATT. | 1394-1103 | " | | |

H. G. FISCHER & CO.
2335 WABANSIA AVE.
CHICAGO, ILL.

CAT. NO.

PART NO. 8153G

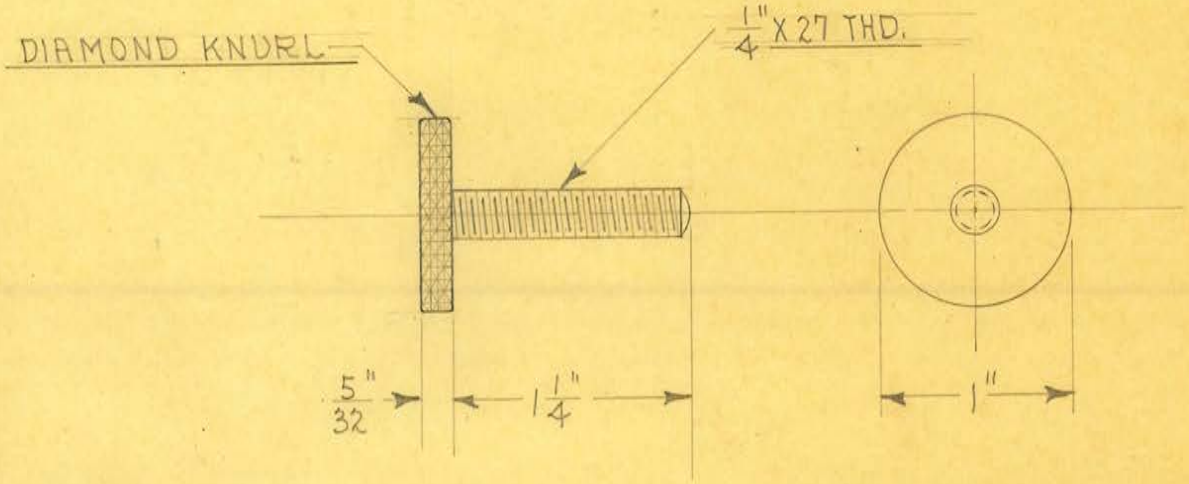


1 REQUIRED

OBSOLETE

| | | | |
|---|---|---|---|
| SIZE | 1" DIAM. | ISSUE 11-8-35 | A.E. |
| KIND | BRASS ROD | CHANGED | |
| SHAPE | | " | |
| FINISH | SATIN CHR. #4 | " | |
| TEMP. | | " | |
| PATT. | | " | |

**TITLE:** UNIVERSAL "GD-88" TUBE STAND COUNTERWEIGHT PULLEY SUPPORT THUMB SCREW

H. G. FISCHER & CO.
2335 WABANSIA AVE.
CHICAGO, ILL.

CAT. NO.

PART NO. 8154 1/2

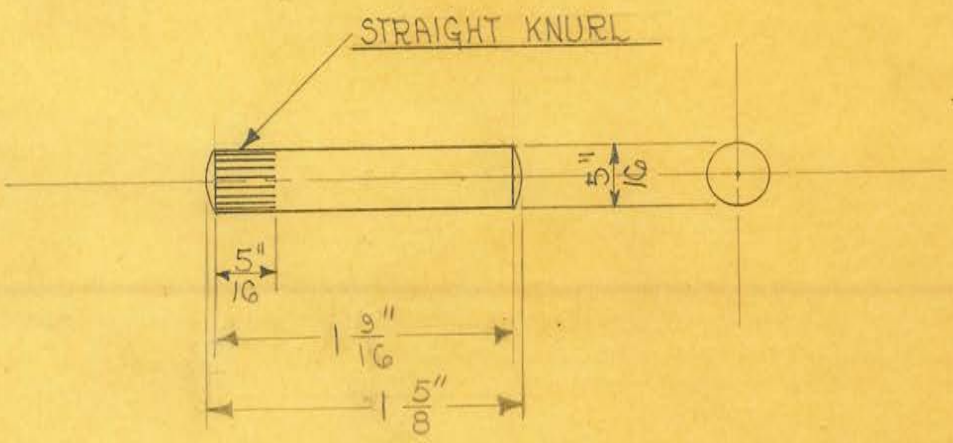


2 REQUIRED

OBSOLETE

| | | | | |
|---|---|---|---|---|
| SIZE | 5/16" | ISSUE 4-4-33 | A.E. | TITLE: UNIVERSAL "GO-88" TUBE STAND COUNTERWEIGHT PULLEY SHAFT |
| KIND | C.R. STEEL | CHANGED | | |
| SHAPE | | " " | | |
| FINISH | DU-LITE #8 | " " | | |
| TEMP. | | " " | | H. G. FISCHER & CO. 2335 WABANSIA AVE. CHICAGO, ILL. — CAT. NO. — PART NO. 8155 |
| PATT. | | " " | | |

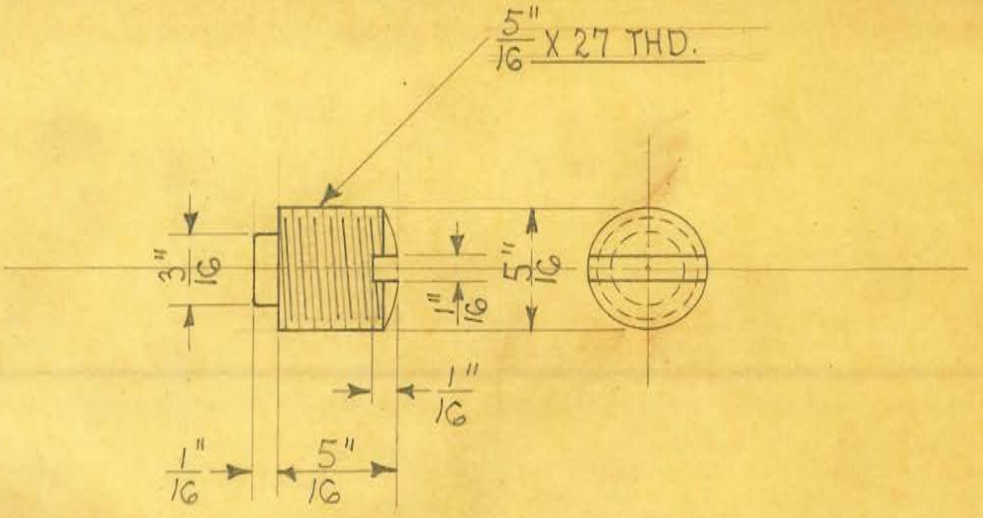


2 REQUIRED

OBSOLETE

Obsolete

| | | | |
|---|---|---|---|
| SIZE | 5/16" DIAM. | ISSUE 5-21-36 | J.E. |
| KIND | C.R. STEEL | CHANGED | |
| SHAPE | | " | |
| FINISH | DU-LITE #8 | " | |
| TEMP. | | " | |
| PATT. | | " | |

**TITLE:**
UNIVERSAL "60-88" TUBE STAND
COUNTERWEIGHT PULLEY SUPPORT SET SCREW

H. G. FISCHER & CO.
2335 WABANSIA AVE.
CHICAGO, ILL.

CAT. NO.

PART NO. 8155 1/2

FINISHED WEIGHT 5 1/2 LBS.

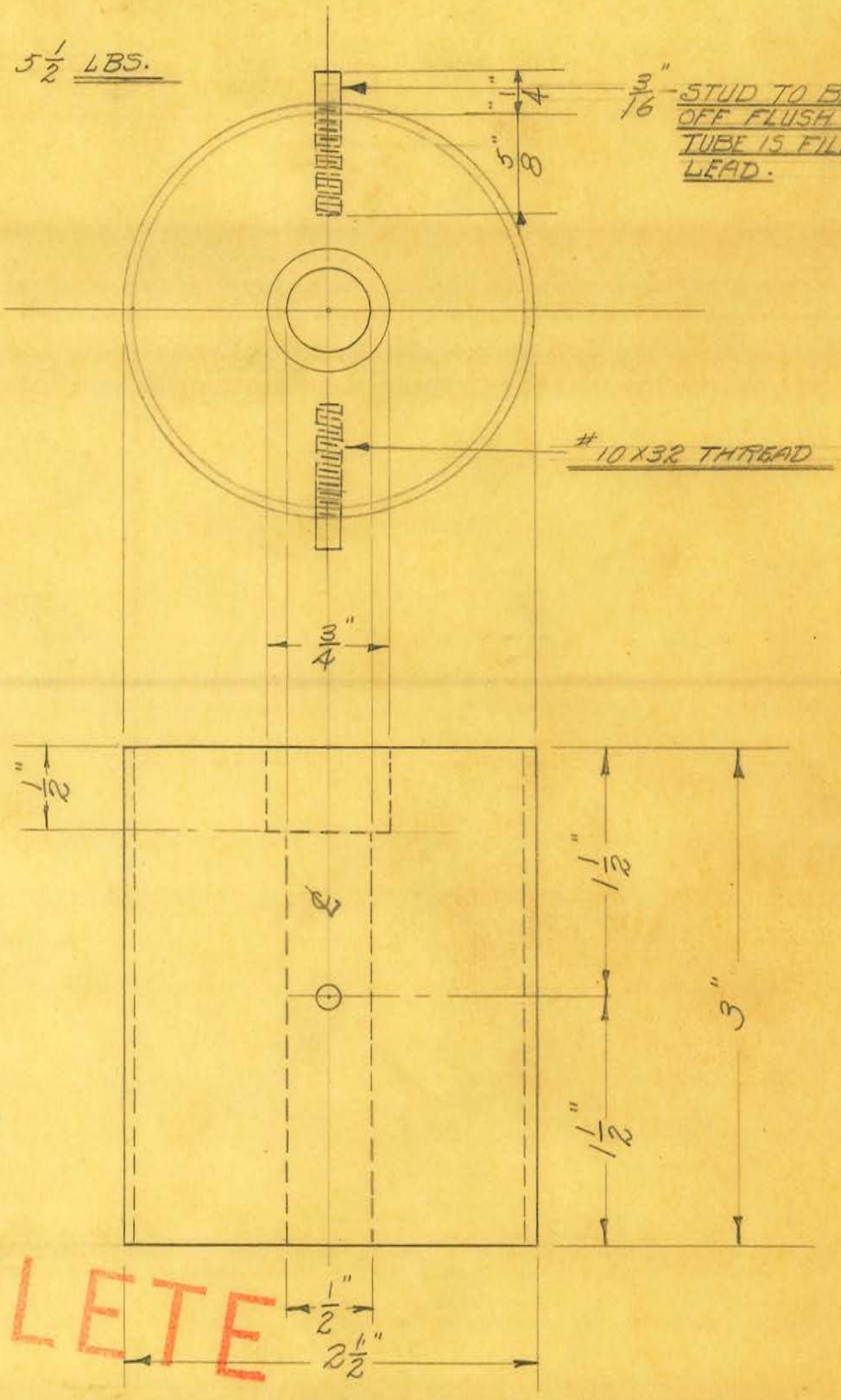


STUD TO BE GROUND OFF FLUSH AFTER TUBE IS FILLED WITH LEAD.

OBSOLETE

1 REQUIRED

| | | | | |
|---|---|---|---|---|
| SIZE | | ISSUE 11-14-33 | N.P. | TITLE: UNIVERSAL "60-88" TUBE STAND SHUTTER COUNTERWEIGHT |
| KIND | | CHANGED | | |
| SHAPE | | " | | |
| FINISH | | " | | |
| TEMP. | | " | | |
| PATT. | | " | | |

H. G. FISCHER & CO.
2335 WABANSIA AVE.
CHICAGO, ILL.

CAT. NO.

PART NO. 8156 1/2 G

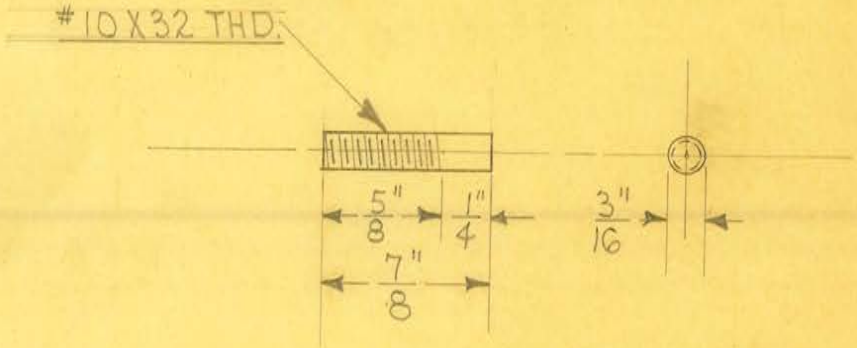


2 REQUIRED

OBSOLETE

| | | | |
|---|---|---|---|
| SIZE | 3/16" DIAM. | ISSUE 5-12-36 | A.E. |
| KIND | C.R. STEEL | CHANGED | |
| SHAPE | | " | |
| FINISH | | " | |
| TEMP. | | " | |
| PATT. | | " | |

**TITLE:** UNIVERSAL "60-88" TUBE STAND
SHUTTER COUNTERWEIGHT TUBE STUD

H. G. FISCHER & CO.
2335 WABANSIA AVE.
CHICAGO, ILL.

CAT. NO.

PART NO. 8156 3/4

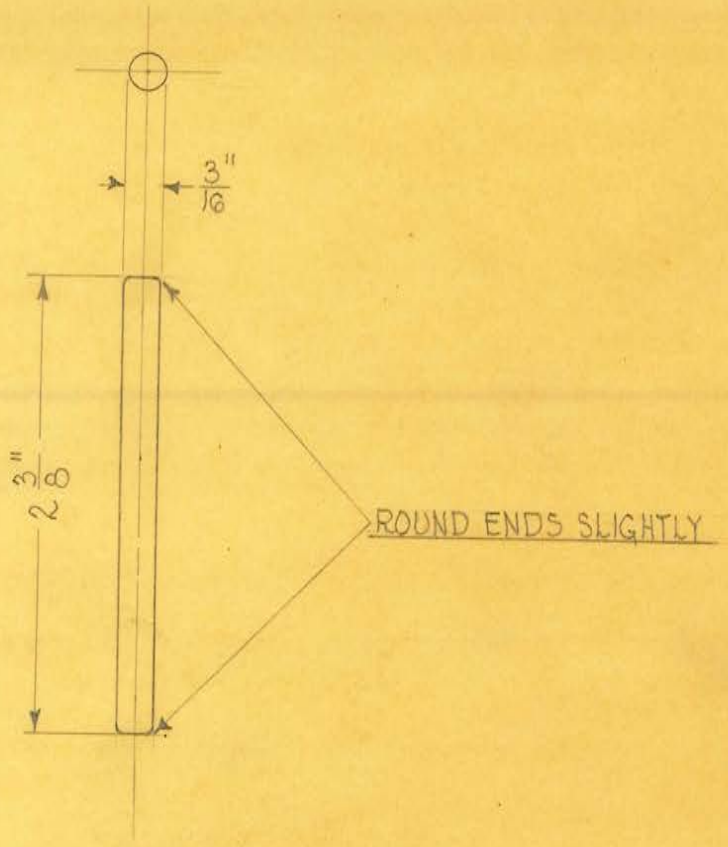


2 REQUIRED

OBSOLETE

| | | | |
|---|---|---|---|
| SIZE | 3/16" | ISSUE 9-25-33 | J.E. |
| KIND | C.R. STEEL | CHANGED | |
| SHAPE | | " " | |
| FINISH | | " " | |
| TEMP. | | " " | |
| PATT. | | " " | |

**TITLE:** UNIVERSAL "CO-88" TUBE STAND TUBE SIDE COUNTERWEIGHT CHAIN SCR. LUG PIN

H. G. FISCHER & CO.
2335 WABANSIA AVE.
CHICAGO, ILL.

CAT. NO.

PART NO. 8160

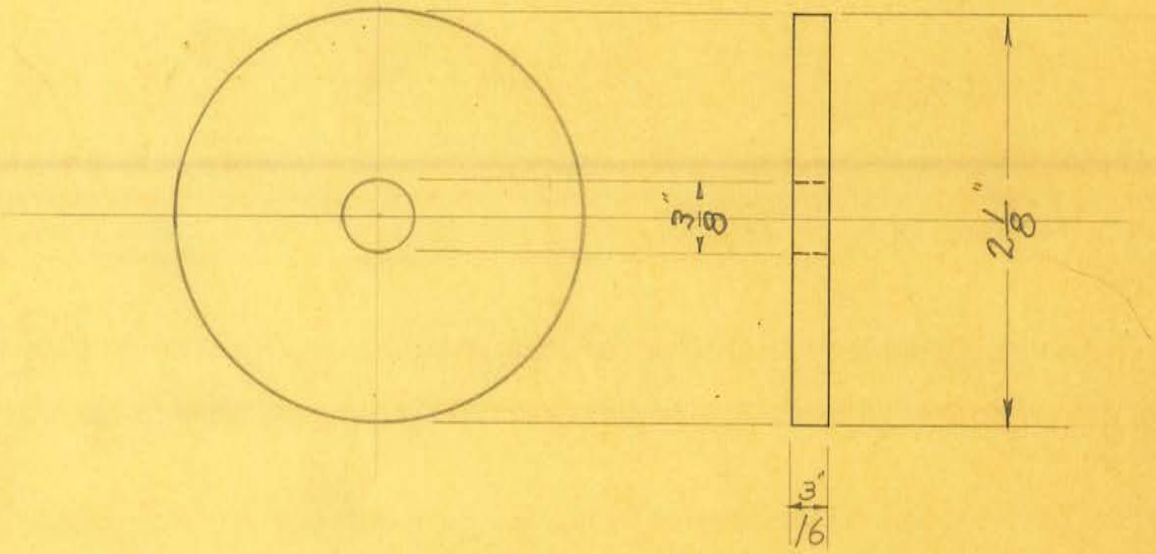


TWO REQUIRED

OBSOLETE

| | | | | |
|---|---|---|---|---|
| SIZE | 3/16" SHEET | ISSUE 10-24-33 | N.P. | TITLE: UNIVERSAL "60-88" TUBE STAND COUNTERWT CLAMP WASHER |
| KIND | C.R. STEEL | CHANGED | | |
| SHAPE | | " | | |
| FINISH | | " | | |
| TEMP. | | " | | |
| PATT. | | " | | |

H. G. FISCHER & CO.
2335 WABANSIA AVE.
CHICAGO, ILL.

CAT. NO.

PART NO. 8161 1/4 F

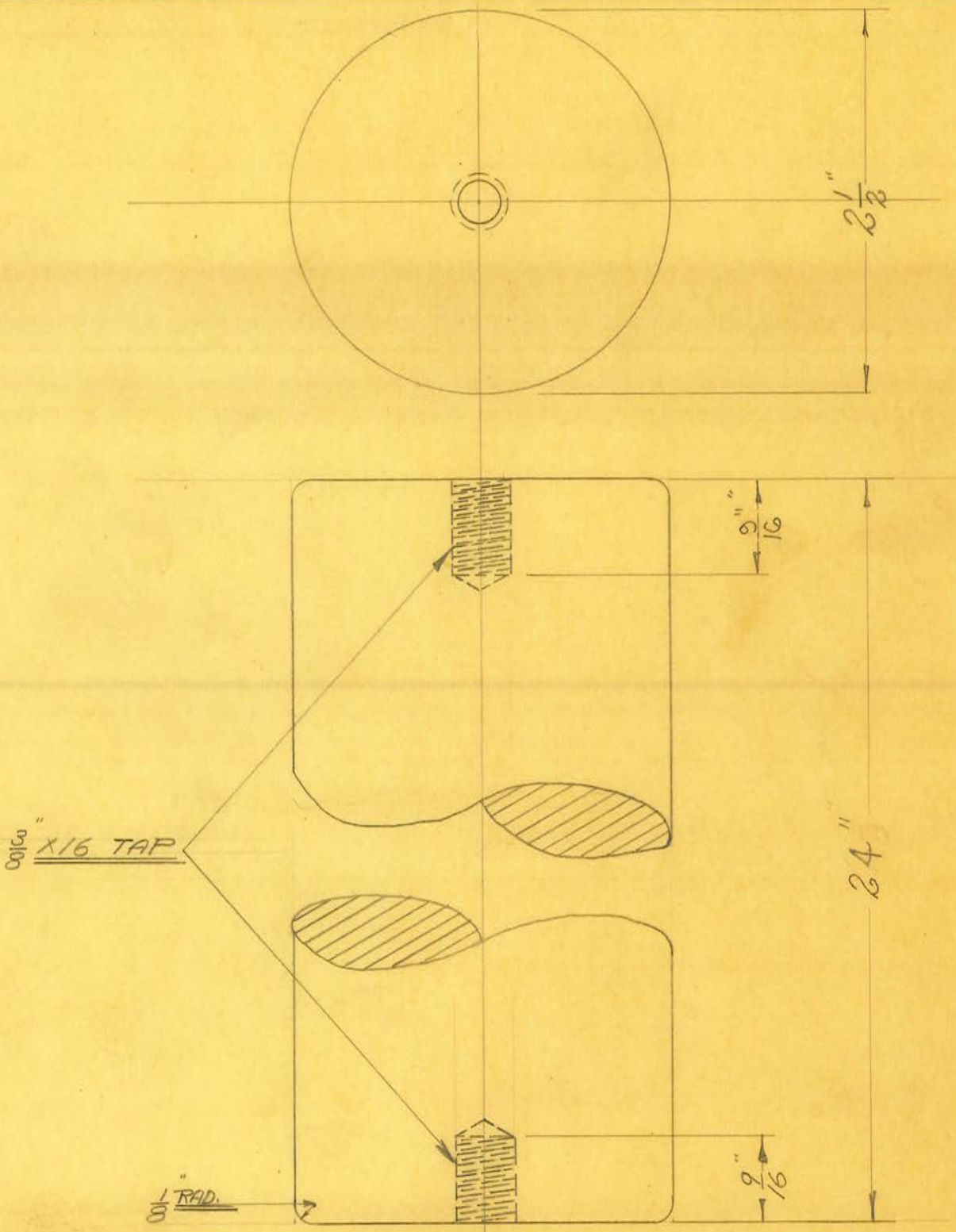


OBSOLETE

| | | | | |
|---|---|---|---|---|
| SIZE | 2 1/2" ROD | ISSUE 11-20-33 | N.P. | TITLE: UNIVERSAL "60-88" TUBE STAND SCREEN SIDE COUNTERWEIGHT. |
| KIND | C.R. STEEL | CHANGED | | |
| SHAPE | | PER C.M. " 11-29-38 | HE | |
| FINISH | | " | | |
| TEMP. | | " | | |
| PATT. | | " | | |

H. G. FISCHER & CO.
2335 WABANSIA AVE.
CHICAGO, ILL.

CAT. NO.

PART NO. 8164A

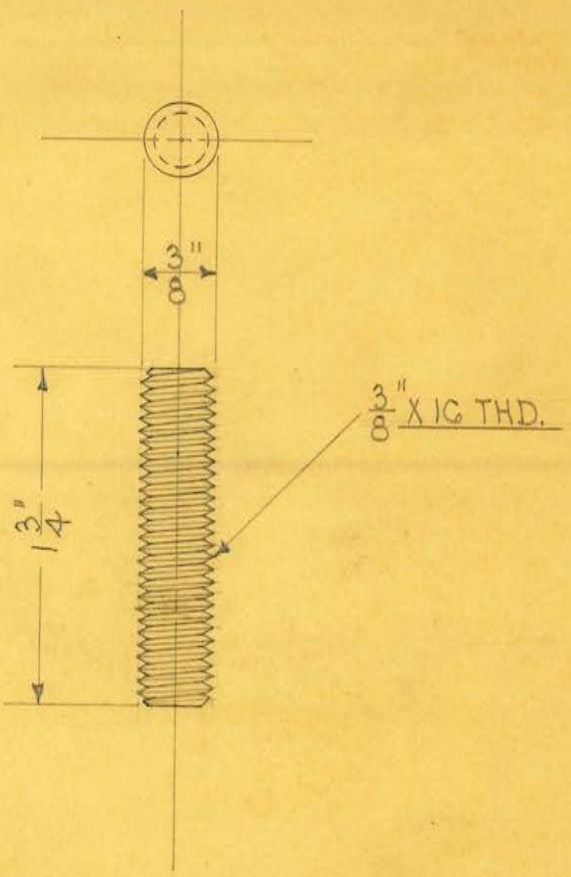


1 REQUIRED

OBSOLETE

| | | | | |
|---|---|---|---|---|
| SIZE | 3/8" | ISSUE 9-25-33 | 2.8 | TITLE: UNIVERSAL "60-88" TUBE STAND SCREEN SIDE COUNTERWEIGHT CLAMP STUD |
| KIND | C. R. STEEL | CHANGED | | |
| SHAPE | | " " | | |
| FINISH | | " " | | |
| TEMP. | | " " | | |
| PATT. | | " " | | |

H. G. FISCHER & CO.
2335 WABANSIA AVE.
CHICAGO, ILL.

CAT. NO.

PART NO. 8166

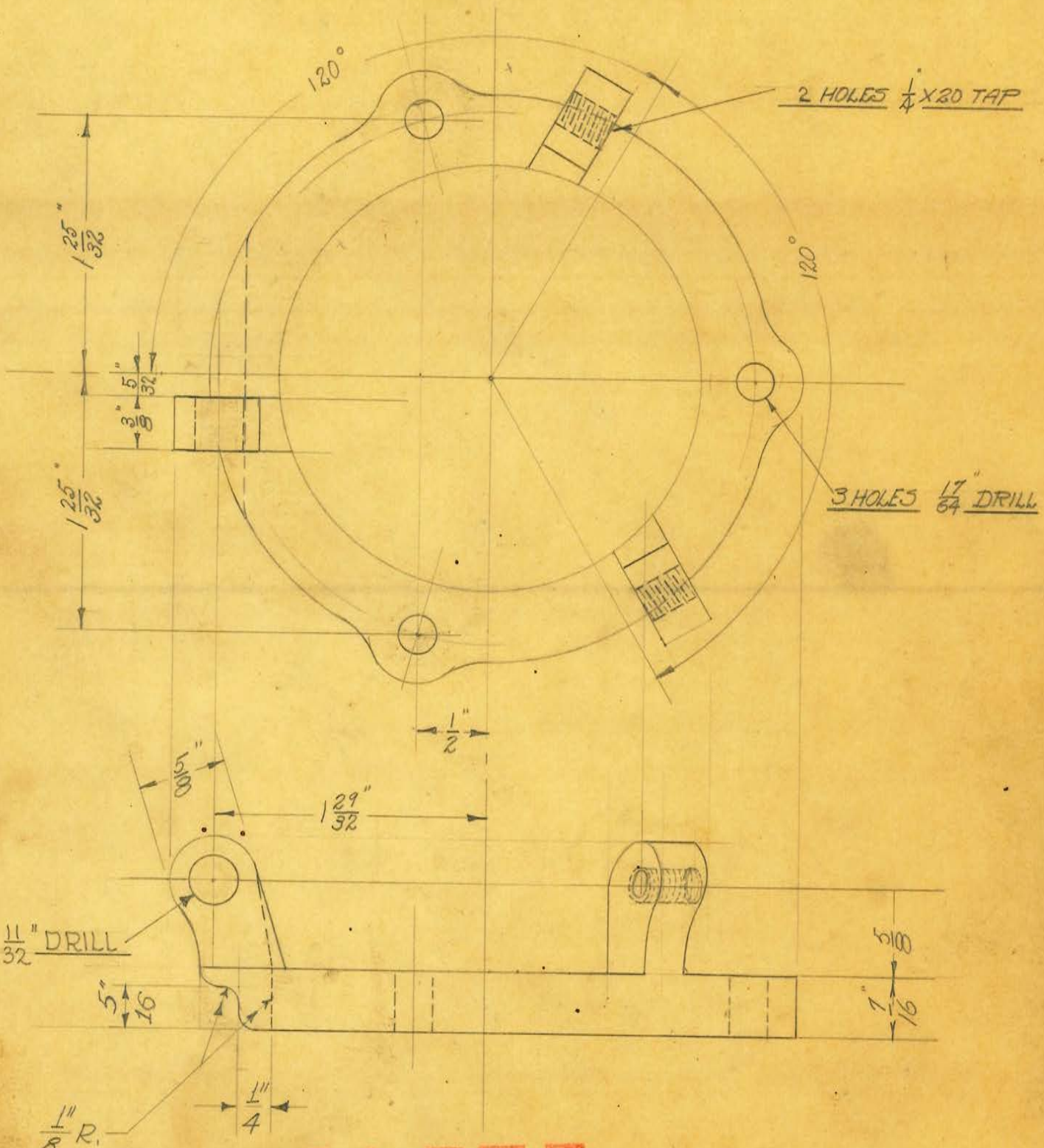


1 REQUIRED

OBSOLETE

| | | | |
|---|---|---|---|
| SIZE | | ISSUE 11-15-33 | N.P. |
| KIND | ALUMINUM | CHANGED | |
| SHAPE | | " | |
| FINISH | | " | |
| TEMP. | | " | |
| PATT. | 1819-600 | " | |

**TITLE:** UNIVERSAL 60-88 TUBE STAND SLIDE BALL BEARING SUPPORT - INTERMEDIATE CASTING

H. G. FISCHER & CO.
2335 WABANSIA AVE.
CHICAGO, ILL.

CAT. NO.

PART NO. 8172AF

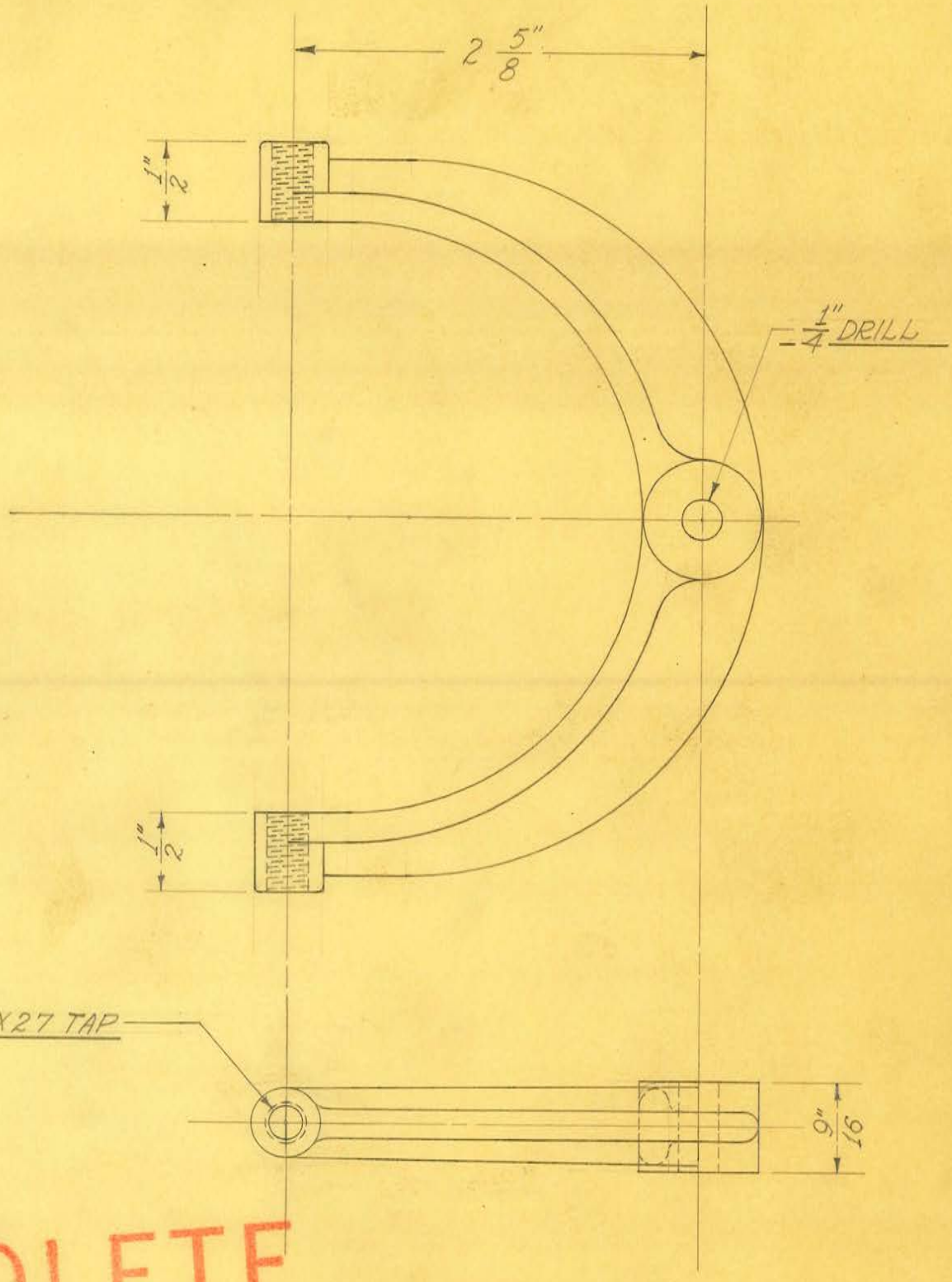


OBSOLETE

2 REQUIRED

| | | | |
|---|---|---|---|
| SIZE | | ISSUE 7-28-38 | J.W. |
| KIND | ALUM. CASTING | CHANGED | |
| SHAPE | | " | |
| FINISH | BLACK. #60 | " | |
| TEMP. | | " | |
| PATT. | 1816-597 | " | |

**TITLE:**
UNIVERSAL "60-88" TUBE STAND
SLIDE LOCK

H. G. FISCHER & CO.
2335 WABANSIA AVE.
CHICAGO, ILL.

CAT. NO.

PART NO. 8175F

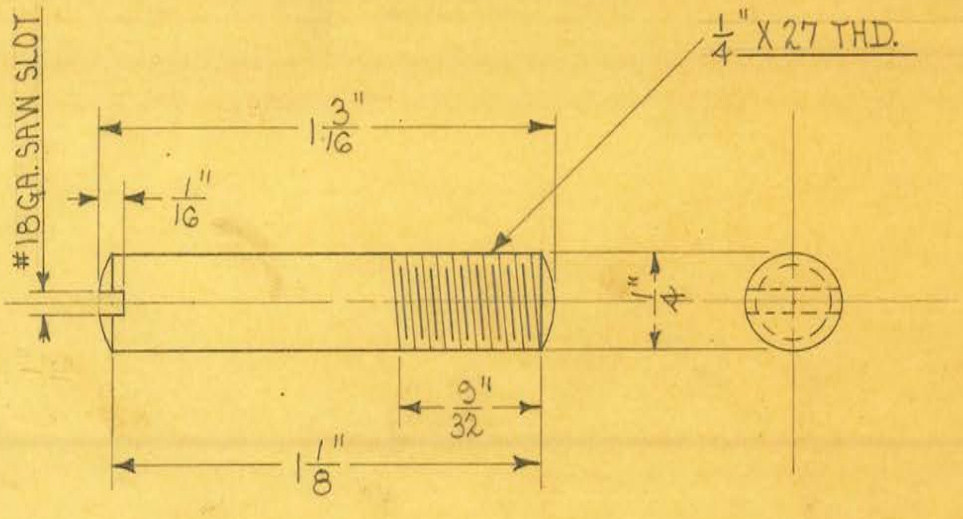


SCALE ≈ 2 X SIZE

2 REQUIRED

OBSOLETE

| | | | | |
|---|---|---|---|---|
| SIZE | 1/4" | ISSUE 4-3-33 | J.E. | TITLE: UNIVERSAL "60-88" TUBE STAND SLIDE LOCK SHAFT PIN |
| KIND | SCR. STOCK | CHANGED | | |
| SHAPE | | " " | | |
| FINISH | CAD. PLATE | " " | | |
| TEMP. | | " " | | H. G. FISCHER & CO. 2335 WABANSIA AVE. CHICAGO, ILL. — CAT. NO. — PART NO. 8176 |
| PATT. | | " " | | |

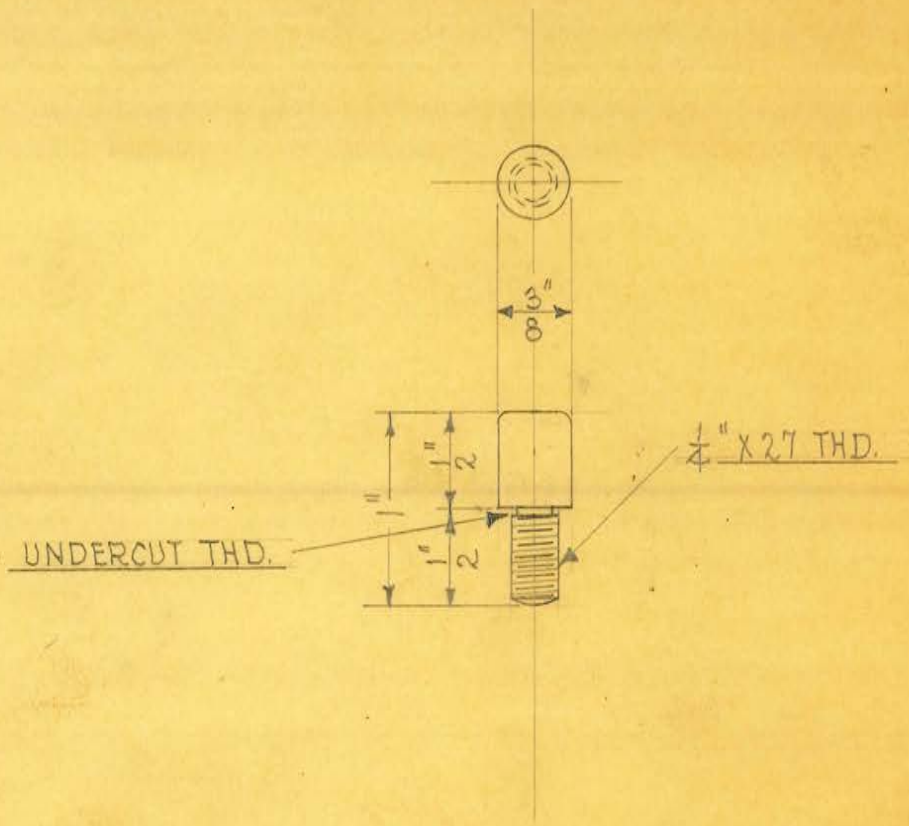


2 REQUIRED

OBSOLETE

| | | | | |
|---|---|---|---|---|
| SIZE | 3/8" | ISSUE 5-23-33 | A.E | TITLE: UNIVERSAL "60-88" TUBE STAND SLIDE LOCK FRICTION PIECE |
| KIND | BAKELITE ROD | CHANGED | | |
| SHAPE | | " " | | |
| FINISH | | " " | | |
| TEMP. | | " " | | H. G. FISCHER & CO. 2335 WABANSIA AVE. CHICAGO, ILL. — CAT. NO. — PART NO. 8177 |
| PATT. | | " " | | |

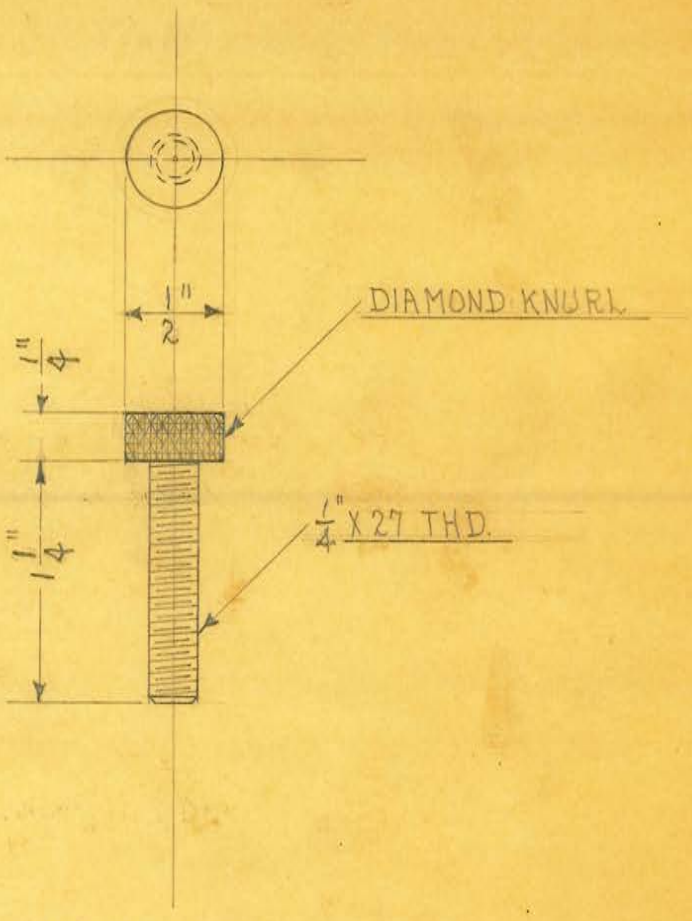


2 REQUIRED

OBSOLETE

| | | | | | |
|---|---|---|---|---|---|
| SIZE | 1/2" | ISSUE 5-23-33 | H.E. | TITLE: UNIVERSAL "CO-88" TUBE STAND SLIDE-LOCK THUMB SCREW | |
| KIND | BRASS ROD | CHANGED | | | |
| SHAPE | | " " | | | |
| FINISH | CHROME POL. | " " | | | |
| TEMP. | HEAD | " " | | H. G. FISCHER & CO. 2335 WABANSIA AVE. CHICAGO, ILL. | CAT. NO. |
| PATT. | | " " | | | PART NO. 8178 |

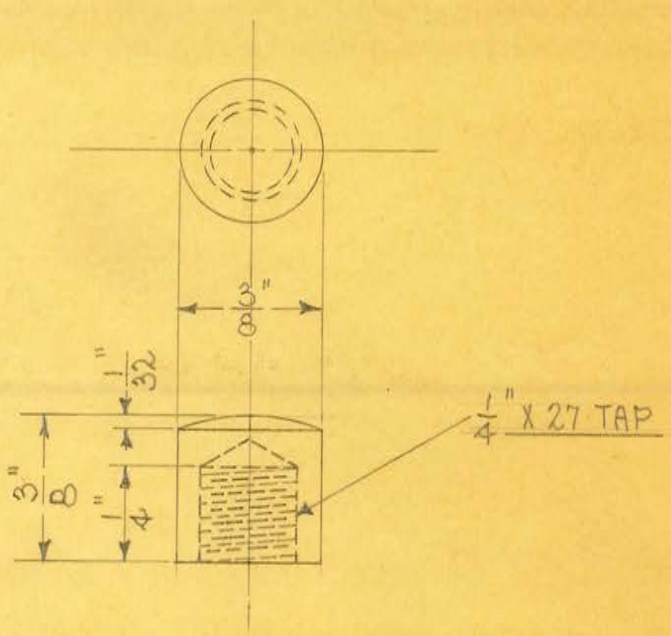


2 REQUIRED

SCALE ~ 2 DIAMETERS

OBSOLETE

| | | | | |
|---|---|---|---|---|
| SIZE | 3/8" | ISSUE 5-23-33 | A E. | TITLE: UNIVERSAL "60-88" TUBE STAND SLIDE LOCK THUMB SCREW TIP |
| KIND | BAKELITE ROD | CHANGED | | |
| SHAPE | | " " | | |
| FINISH | | " " | | |
| TEMP. | | " " | | |
| PATT. | | " " | | |

H. G. FISCHER & CO.
2335 WABANSIA AVE.
CHICAGO, ILL.

CAT. NO.

PART NO. 8179

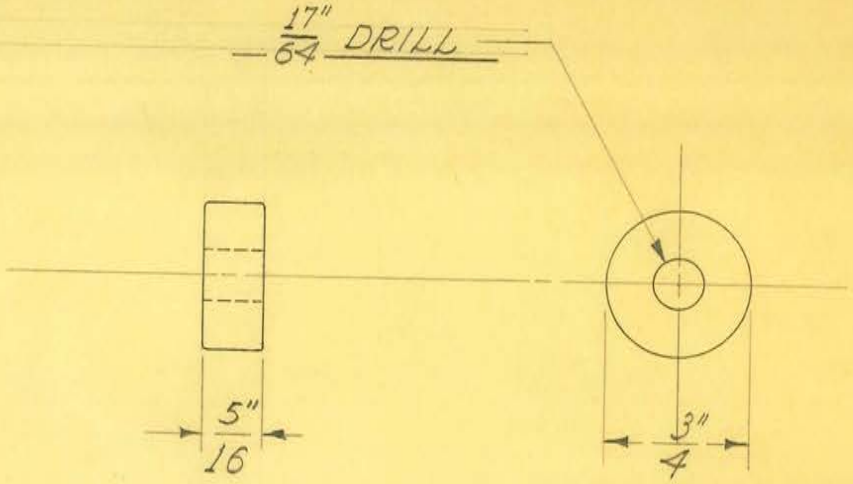


4 REQUIRED

OBSOLETE

| | | | | |
|---|---|---|---|---|
| SIZE | 3/4" DIAM. | ISSUE 12-30-37 | J.W. | TITLE: UNIVERSAL "60-88" TUBE STAND HORIZ. FLUO. SCREEN SLIDE - SPACER |
| KIND | BRASS ROD | CHANGED | | |
| SHAPE | | " | | |
| FINISH | KRIST. #57 | " | | |
| TEMP. | | " | | |
| PATT. | | " | | |

H. G. FISCHER & CO.
2335 WABANSIA AVE.
CHICAGO, ILL.

CAT. NO.

PART NO. 8180 1/2

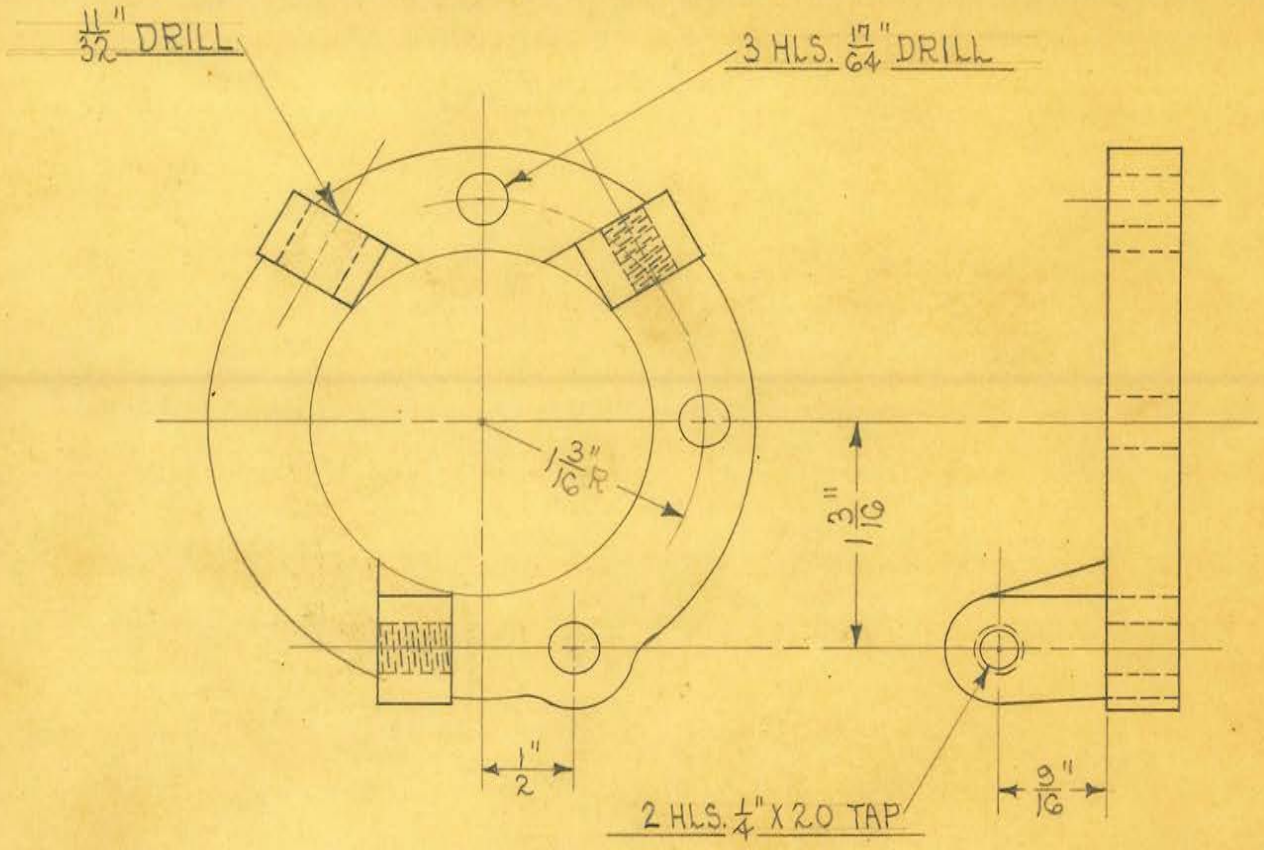


1 REQUIRED

OBSOLETE

| | | | | |
|---|---|---|---|---|
| SIZE | | ISSUE 4-28-33 | H.E. | TITLE: UNIVERSAL "60-88" TUBE STAND FLUOROSCOPIC SCREEN ROLLER SUPP. (FRONT) |
| KIND | ALUM. CASTING | CHANGED | | |
| SHAPE | | " " | | |
| FINISH | | " " | | |
| TEMP. | | " " | | H. G. FISCHER & CO. 2335 WABANSIA AVE. CHICAGO, ILL. — CAT. NO. — PART NO. 8182F |
| PATT. | 2402-620 | " " | | |

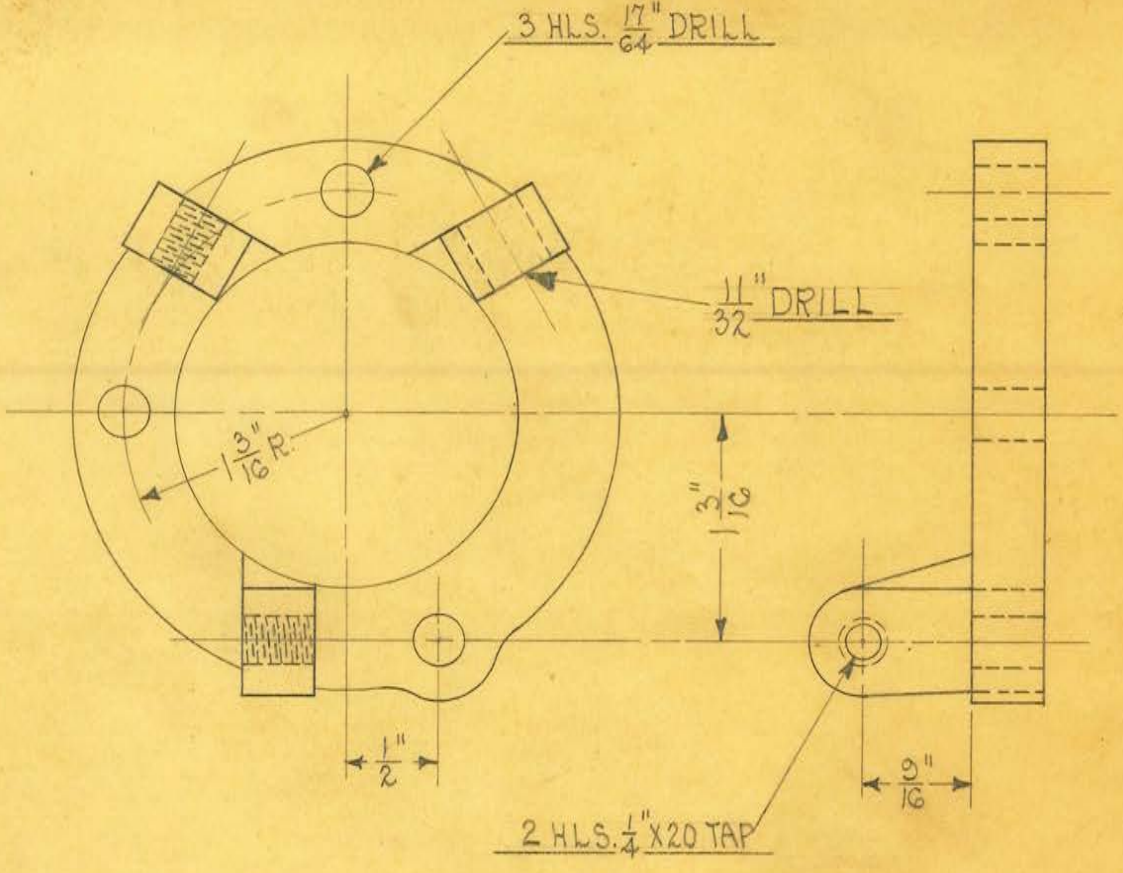


1 REQUIRED

OBSOLETE

| | | | | |
|---|---|---|---|---|
| SIZE | | ISSUE 4-27-33 | A.E. | TITLE: UNIVERSAL "60-88" TUBE STAND FLUOROSCOPIC SCREEN ROLLER SUPP. (REAR) |
| KIND | ALUM. CASTING | CHANGED | | |
| SHAPE | | " " | | |
| FINISH | | " " | | |
| TEMP. | | " " | | H. G. FISCHER & CO. 2335 WABANSIA AVE. CHICAGO, ILL. — CAT. NO. — PART NO. 8183F |
| PATT. | 2402-620 | " " | | |

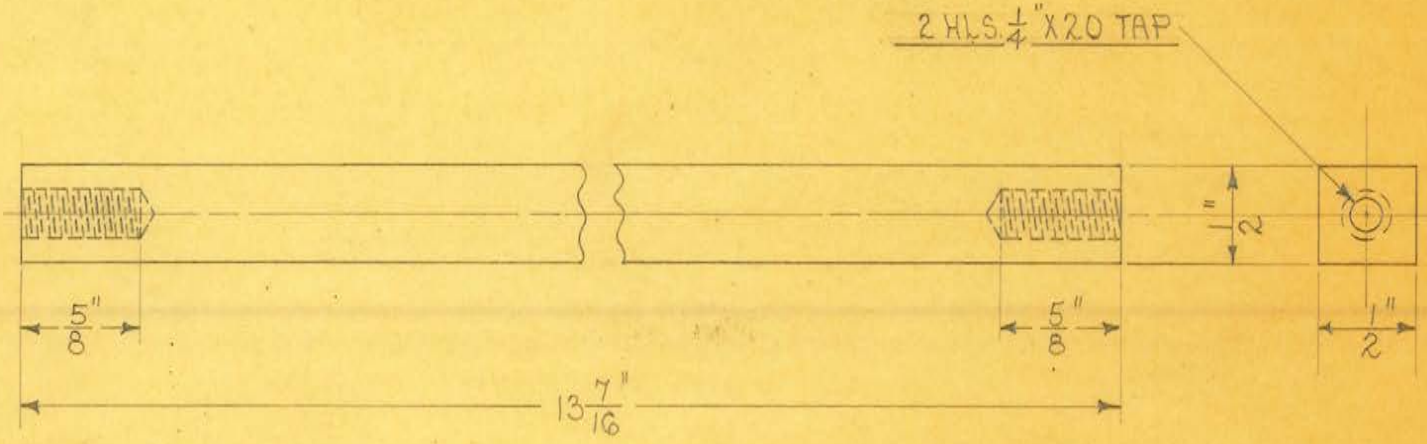


1 REQUIRED

OBSOLETE

| | | | |
|---|---|---|---|
| SIZE | 1/2" SQ. | ISSUE 5-12-33 | W.E. |
| KIND | C.R. STEEL | CHANGED | |
| SHAPE | | " " | |
| FINISH | CHROME POL. | " " | |
| TEMP. | | " " | |
| PATT. | | " " | |

**TITLE:** UNIVERSAL "60-88" TUBE STAND HORIZ. FLUOROSCOPIC SCREEN SLIDE-ROD

H. G. FISCHER & CO.
2335 WABANSIA AVE.
CHICAGO, ILL.

CAT. NO.

PART NO. 8184

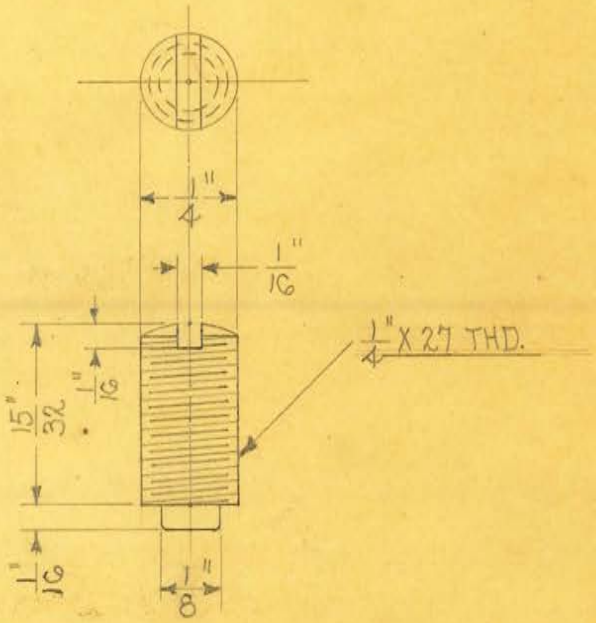


SCALE ~ 2 DIAMETERS
2 REQUIRED

OBSOLETE

| | | | | |
|---|---|---|---|---|
| SIZE | 1/4" | ISSUE 6-5-33 | A.E. | TITLE: UNIVERSAL "60-88" TUBE STAND HORIZ. FLUOROSCOPIC SCREEN GUIDE - SET SCREW |
| KIND | C.R. STEEL | CHANGED | | |
| SHAPE | | " " | | |
| FINISH | DU-LITE #8 | " " | | |
| TEMP. | | " " | | H. G. FISCHER & CO. 2335 WABANSIA AVE. CHICAGO, ILL. — CAT. NO. — PART NO. 8186 |
| PATT. | | " " | | |

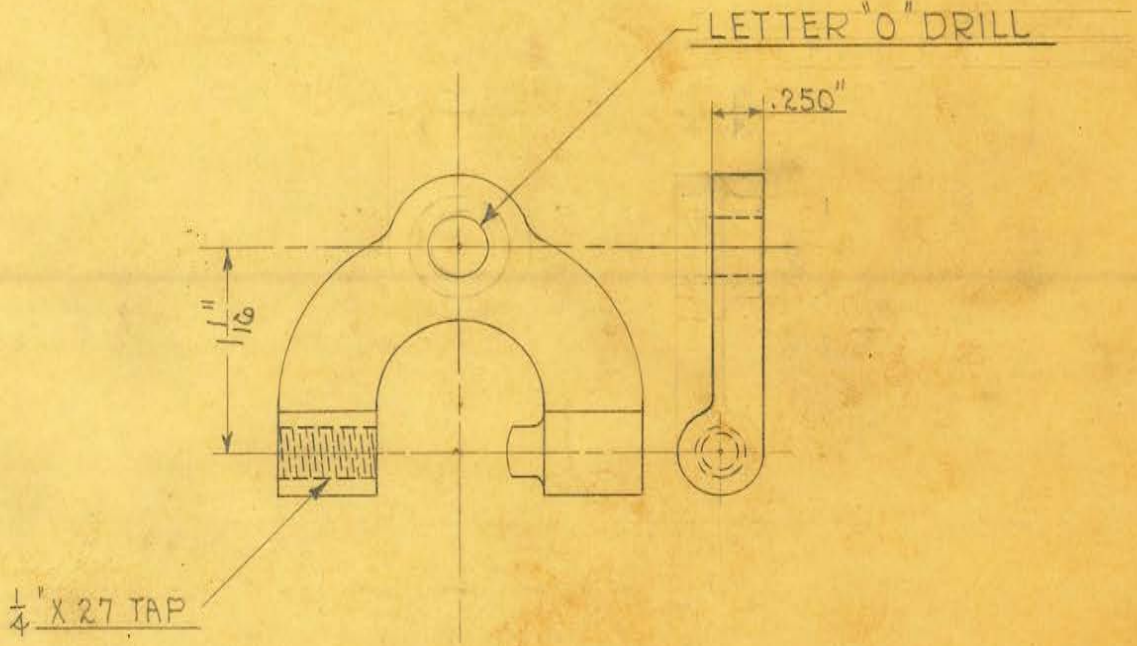


1 REQUIRED

OBSOLETE

| | | | | |
|---|---|---|---|---|
| SIZE | | ISSUE 4-18-33 | A.E. | TITLE: UNIVERSAL "60-88" TUBE STAND HORIZONTAL FLUOROSCOPIC SCREEN SLIDE LOCK |
| KIND | ALUM. CASTING | CHANGED | | |
| SHAPE | | " " | | |
| FINISH | BLK. LACQUER | " " | | |
| TEMP. | | " " | | H. G. FISCHER & CO. 2335 WABANSIA AVE. CHICAGO, ILL. — CAT. NO. — PART NO. 8187F |
| PATT. | 2327-C16 | " " | | |

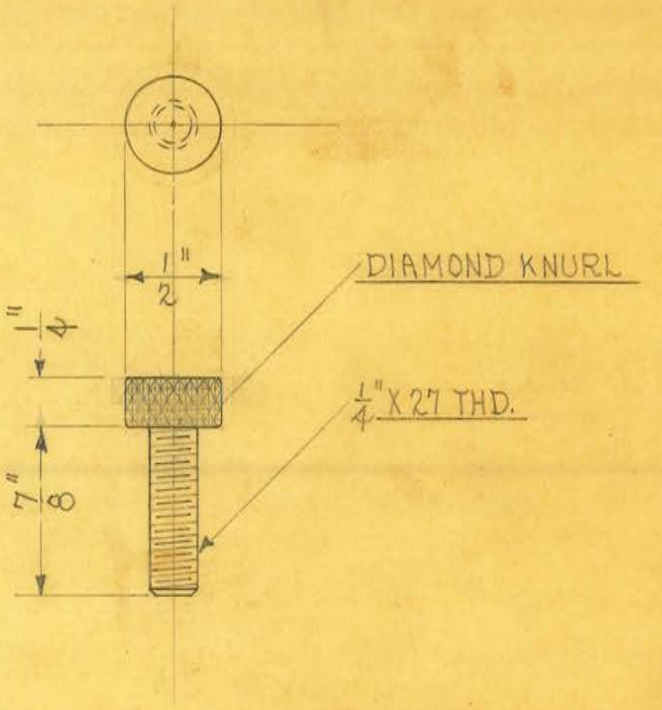


1 REQUIRED

OBSOLETE

| | | | | |
|---|---|---|---|---|
| SIZE | 1/2" | ISSUE 8-3-33 | H.G. | TITLE: UNIVERSAL "GO-88" TUBE STAND FL. SCREEN SLIDE LOCK THUMB SCREW |
| KIND | BRASS ROD | CHANGED | | |
| SHAPE | | " " | | |
| FINISH | CHROME POL. HEAD | " " | | |
| TEMP. | | " " | | H. G. FISCHER & CO. 2335 WABANSIA AVE. CHICAGO, ILL. — CAT. NO. — PART NO. 8188 |
| PATT. | | " " | | |

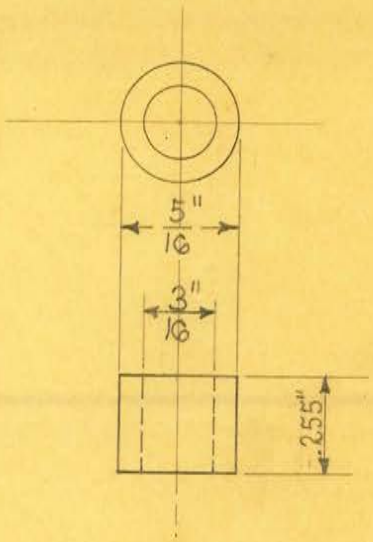


SCALE ~ 2 DIAMETERS

1 REQUIRED

OBSOLETE

| | | | | |
|---|---|---|---|---|
| SIZE | | ISSUE 4-26-33 | H.E. | TITLE: UNIVERSAL "GO-88" TUBE STAND HORIZ. FL. SCREEN SLIDE LOCK BUSHING |
| KIND | BRASS | CHANGED | | |
| SHAPE | | " " | | |
| FINISH | CAD. PLATE | " " | | |
| TEMP. | | " " | | |
| PATT. | | " " | | |

H. G. FISCHER & CO.
2335 WABANSIA AVE.
CHICAGO, ILL.

CAT. NO.

PART NO. 8189

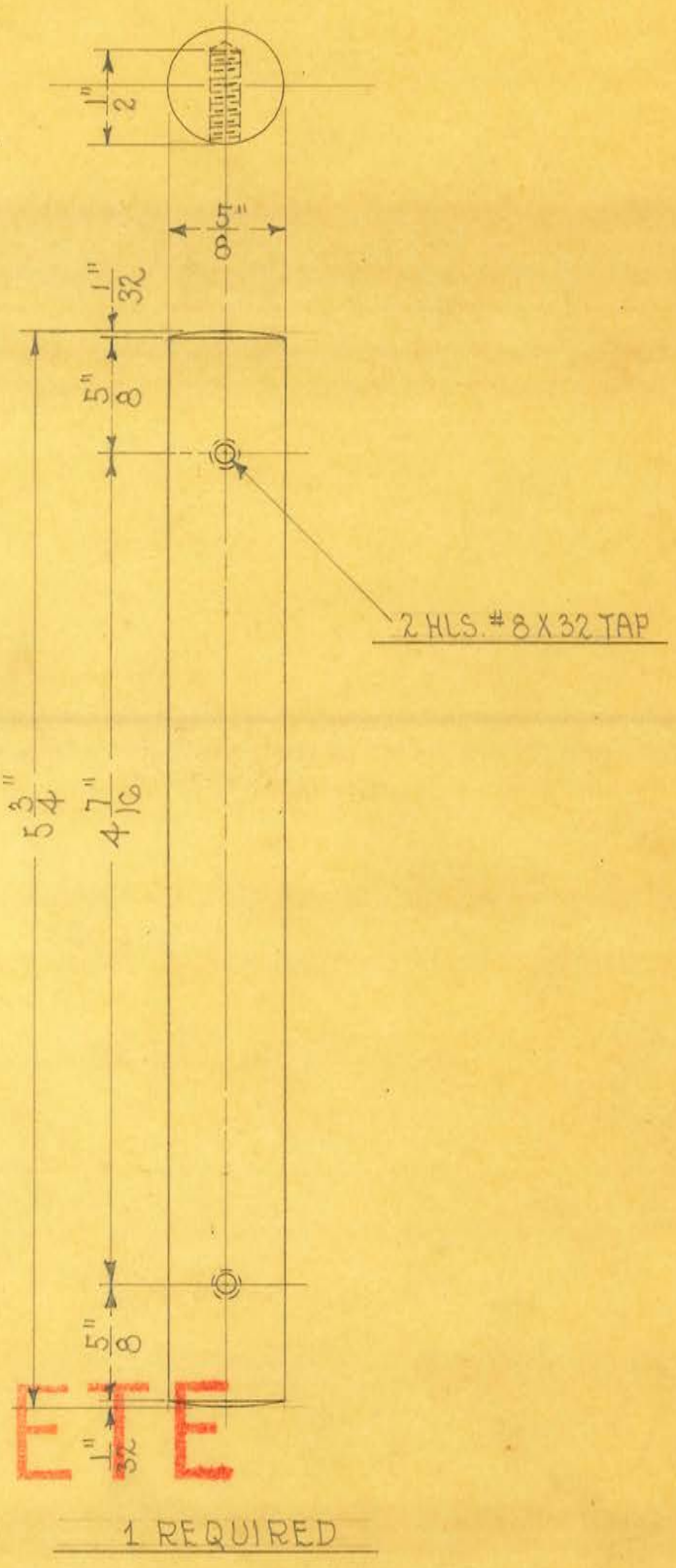


OBSOLETE

1 REQUIRED

| | | | | |
|---|---|---|---|---|
| SIZE | 5/8" ROD | ISSUE 6-29-33 | H.E. | **TITLE:** UNIVERSAL "60-88" TUBE STAND FL. SCREEN ADJ. ARM SHAFT |
| KIND | C.R. STEEL | CHANGED | | |
| SHAPE | | " " | | |
| FINISH | CHR. POL. ENDS | " " | | |
| TEMP. | | " " | | |
| PATT. | | " " | | |

H. G. FISCHER & CO.
2335 WABANSIA AVE.
CHICAGO, ILL.

CAT. NO.

PART NO. 8192

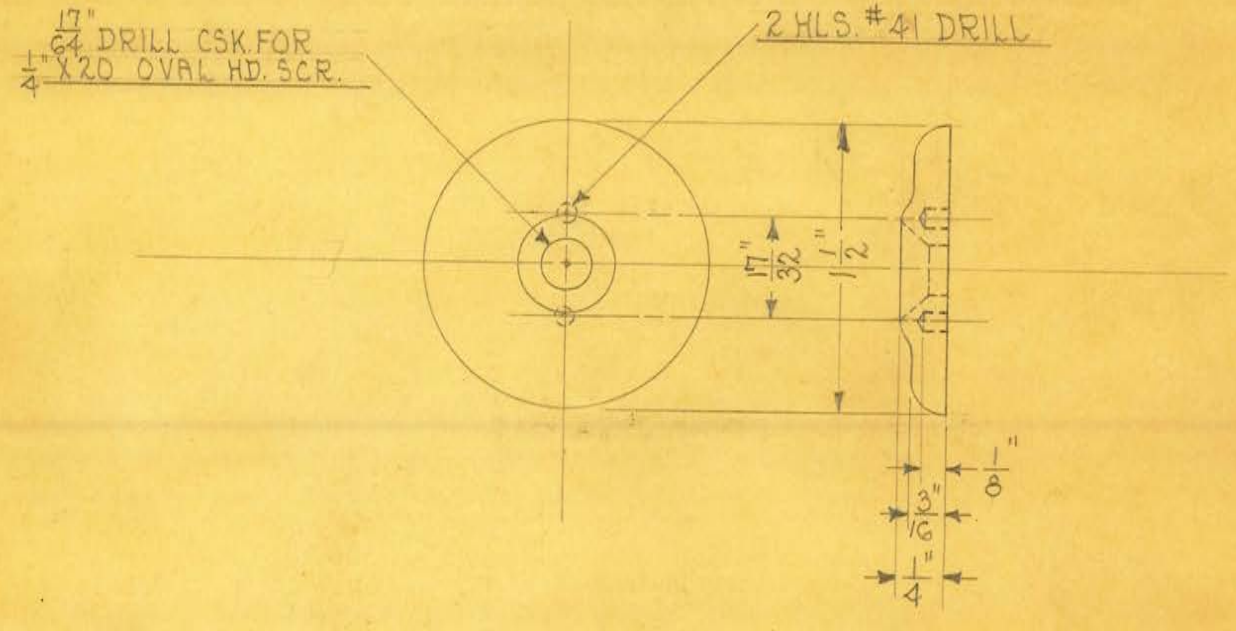


1 REQUIRED

OBSOLETE

| | | | | |
|---|---|---|---|---|
| SIZE | | ISSUE 6-5-33 | H.E. | TITLE: UNIVERSAL "60-88" TUBE STAND FL. SCREEN ADJ. ARM WASHER |
| KIND | BRASS | CHANGED | | |
| SHAPE | | " " | | |
| FINISH | CHROME POL. | " " | | |
| TEMP. | TOP SIDE | " " | | H. G. FISCHER & CO. 2335 WABANSIA AVE. CHICAGO, ILL. — CAT. NO. — PART NO. 8193 |
| PATT. | | " " | | |

OBSOLETE

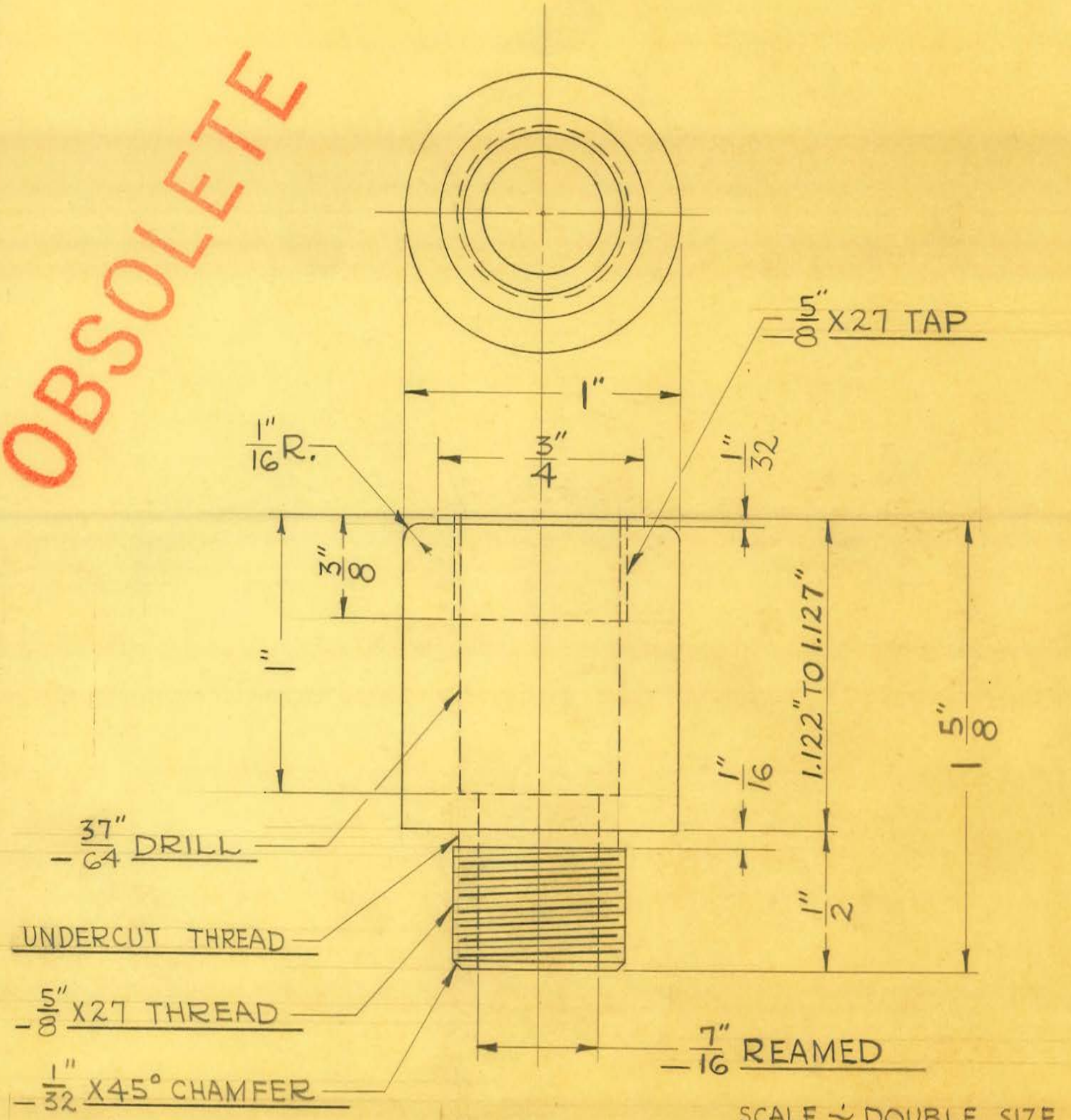


SCALE ½ DOUBLE SIZE

1 REQUIRED

| | | | |
|---|---|---|---|
| SIZE | 1" DIA. | ISSUE 12-26-45 | J.V.W. |
| KIND | C.R. STEEL | CHANGED | |
| SHAPE | | " | |
| FINISH | | " | |
| TEMP. | | " | |
| PATT. | | " | |

**TITLE:**
UNIVERSAL "60-88" TUBE STAND FL. SCREEN
ADJ. ARM LOCK PIN HOUSING

H. G. FISCHER & CO.
2335 WABANSIA AVE.
CHICAGO, ILL.

CAT. NO.

PART NO. 8194

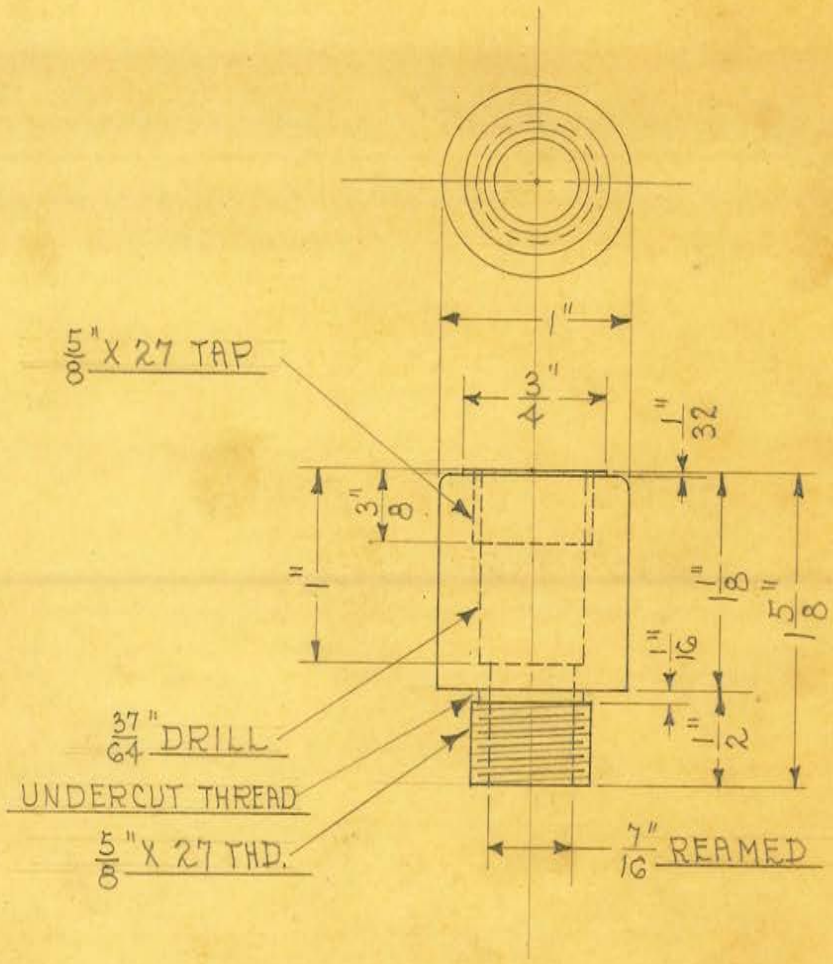


1 REQUIRED

OBSOLETE See new Tracing

| | | | | | | |
|---|---|---|---|---|---|---|
| SIZE | 1" | ISSUE 5-9-33 | A.E. | TITLE: UNIVERSAL "60-88" TUBE STAND FL. SCREEN ADJ. ARM LOCK PIN HOUSING | | |
| KIND | C.R. STEEL | CHANGED | | | | |
| SHAPE | | " " | | | | |
| FINISH | | " " | | | | |
| TEMP. | | " " | | H. G. FISCHER & CO. 2335 WABANSIA AVE. CHICAGO, ILL. | CAT. NO. | PART NO. 8194 |
| PATT. | | " " | | | | |

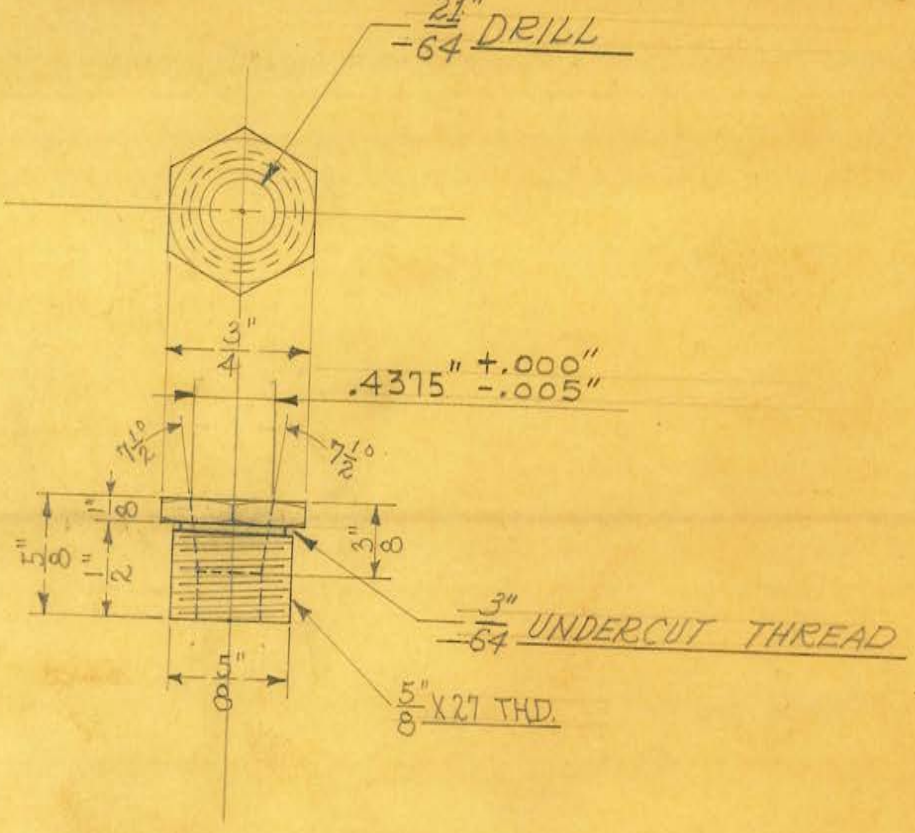


2 REQUIRED

OBSOLETE

| | | | | |
|---|---|---|---|---|
| SIZE | 3/4" HEX. | ISSUE 6-5-33 | H.E. | TITLE: UNIVERSAL "60-88" TUBE STAND FL. SCREEN ADJ. ARM LOCK PIN BUSHING |
| KIND | C.R. STEEL | CHANGED | | |
| SHAPE | | " " | | |
| FINISH | CAD. PLATE | " " | | |
| TEMP. | | " " | | |
| PATT. | | " " | | |

H. G. FISCHER & CO.
2335 WABANSIA AVE.
CHICAGO, ILL.

CAT. NO.

PART NO. 8195

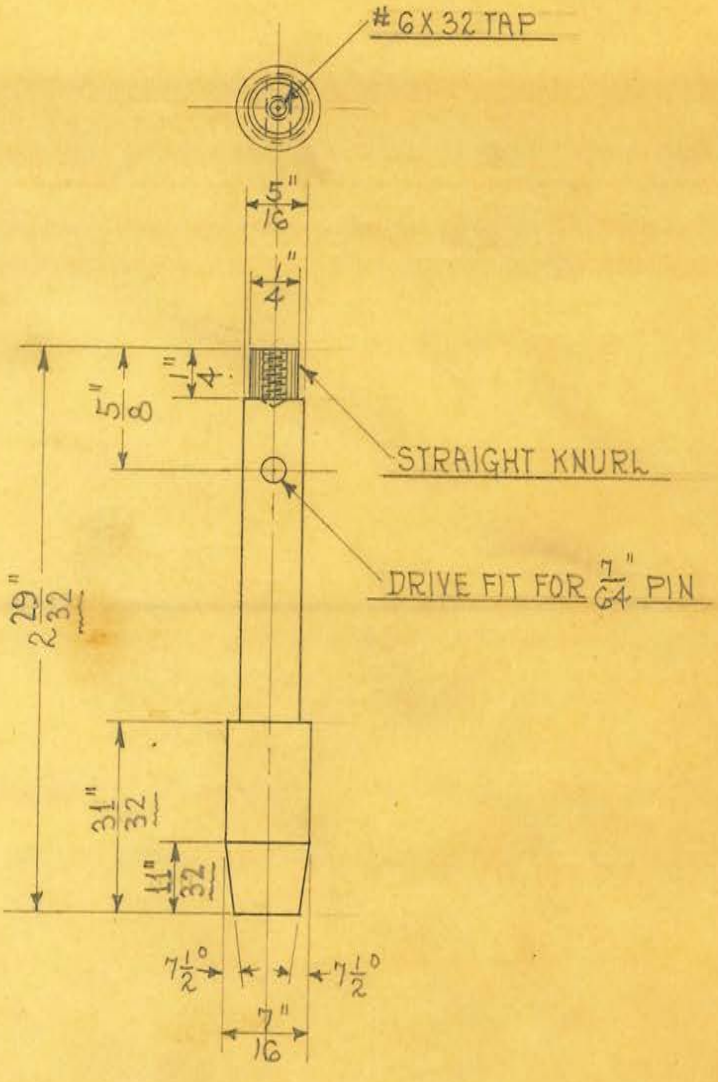


2 REQUIRED

OBSOLETE

see new Tracing

| | | | |
|---|---|---|---|
| SIZE | 7/16" | ISSUE 4-13-33 | J.E. |
| KIND | DRILL ROD | CHANGED | |
| SHAPE | | " " | |
| FINISH | | " " | |
| TEMP. | | " " | |
| PATT. | | " " | |

**TITLE:** UNIVERSAL "60-88" TUBE STAND FL. SCREEN ADJ. ARM & HOR. TUBE BRKT. LOCK PIN

H. G. FISCHER & CO.
2335 WABANSIA AVE.
CHICAGO, ILL.

CAT. NO.

PART NO. 8196

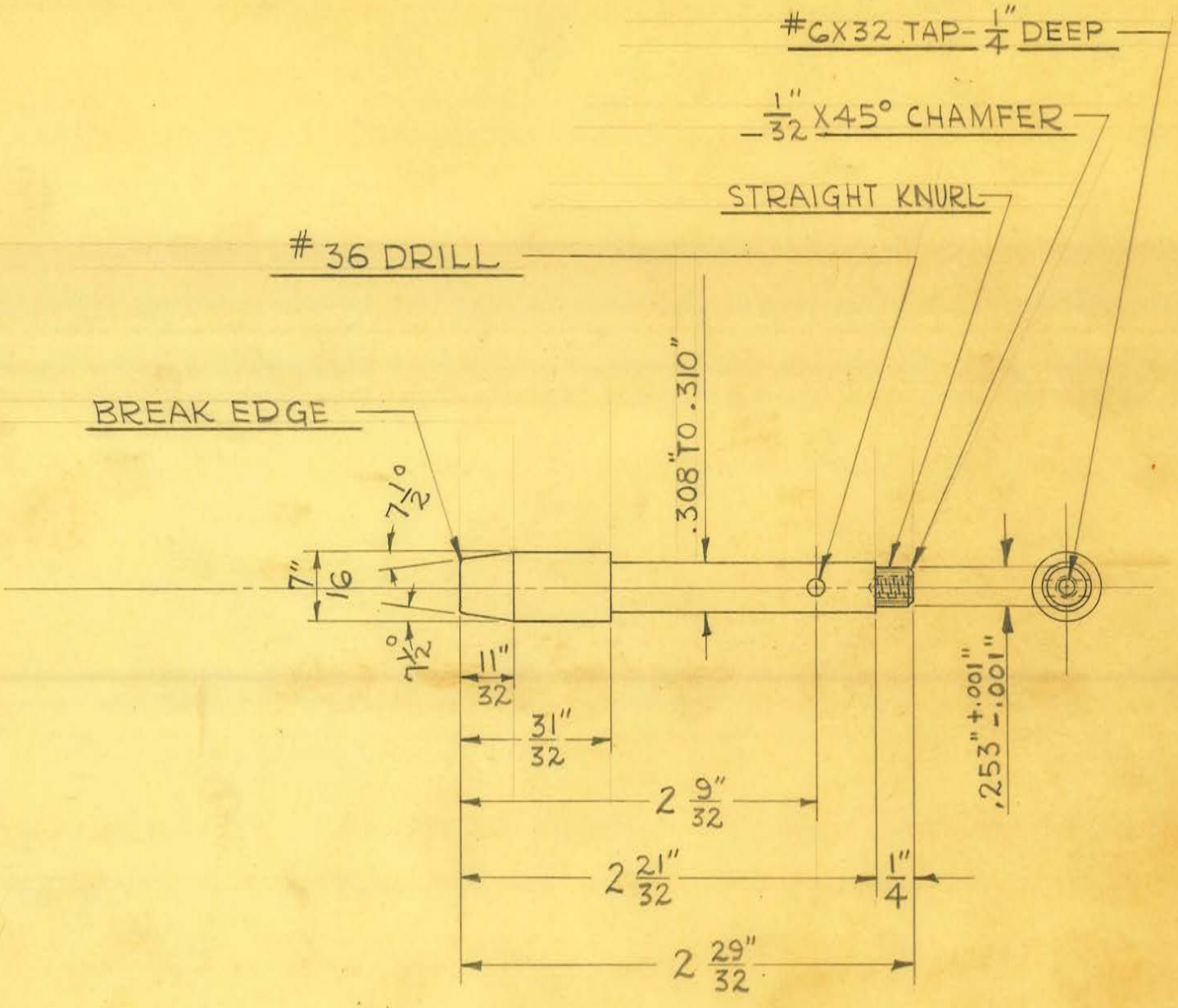


1 REQUIRED

OBSOLETE

| | | | |
|---|---|---|---|
| SIZE | 7/16" DIA. | ISSUE 12-20-45 | J.V.W. |
| KIND | DRILL ROD | CHANGED | |
| SHAPE | | " | |
| FINISH | | " | |
| TEMP. | | " | |
| PATT. | | " | |

**TITLE:**
UNIVERSAL "60-88" TUBE STAND FL. SCREEN ADJ. ARM & HORIZ. TUBE BRKT. LOCK PIN

H. G. FISCHER & CO.
2338 WABANSIA AVE.
CHICAGO, ILL.

CAT. NO.

PART NO. 8196

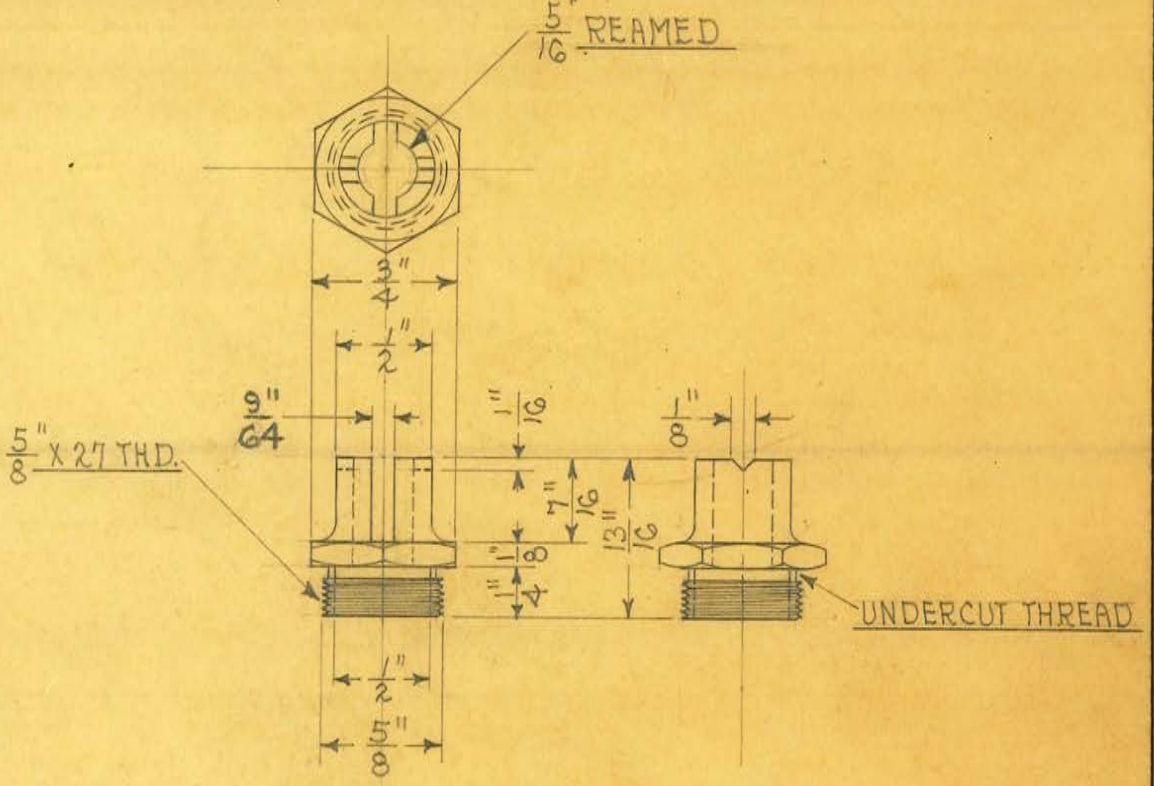


2 REQUIRED

OBSOLETE

| | | | | |
|---|---|---|---|---|
| SIZE | 3/4" HEX. | ISSUE 4-13-33 | A.E. | TITLE: UNIVERSAL "60-88" TUBE STAND FL. SCREEN ADJ. ARM & HOR. TUBE BRKT. LOCK PIN UPPER GUIDE |
| KIND | C.R. STEEL | CHANGED | | |
| SHAPE | | " " | | |
| FINISH | CHROME POL. | " " | | |
| TEMP. | | " " | | |
| PATT. | | " " | | |

H. G. FISCHER & CO.
2335 WABANSIA AVE.
CHICAGO, ILL.

CAT. NO.

PART NO. 8197

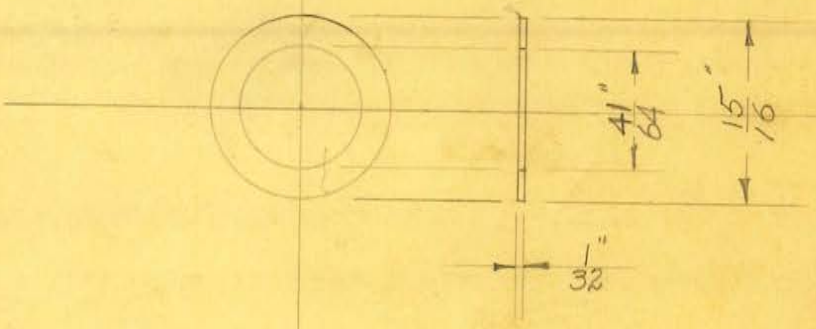


6 REQUIRED

OBSOLETE

| | | | | |
|---|---|---|---|---|
| SIZE | 1/32 SHEET | ISSUE 10-25-33 | N. P. | TITLE: UNIVERSAL "60-88" TUBE STAND FL. SCREEN ADJ. ARM & HORI. TUBE BRKT. LOCK PIN. WASHER. |
| KIND | C.R. STEEL | CHANGED | | |
| SHAPE | | " | | |
| FINISH | CAD. PLATE | " | | |
| TEMP. | | " | | |
| PATT. | | " | | |

H. G. FISCHER & CO.
2335 WABANSIA AVE.
CHICAGO, ILL.

CAT. NO.

PART NO. 8199

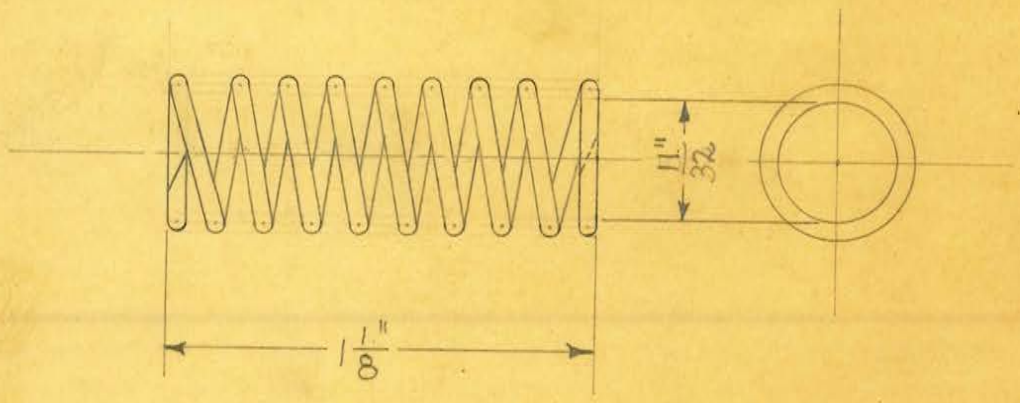


SCALE ÷ DOUBLE SIZE

2 REQUIRED

OBSOLETE

Obsolete

SEC 19086

| | | | |
|---|---|---|---|
| SIZE | .040" | ISSUE 4-13-33 | H.E. |
| KIND | PIANO WIRE | CHANGED | |
| SHAPE | | " " | |
| FINISH | | " " | |
| TEMP. | | " " | |
| PATT. | | " " | |

**TITLE:** UNIVERSAL '60-88" TUBE STAND FL. SCREEN ADJ. ARM. & HOR. TUBE BRKT. LOCK PIN SPRING

H. G. FISCHER & CO.
2335 WABANSIA AVE.
CHICAGO, ILL.

CAT. NO.

PART NO. 8200

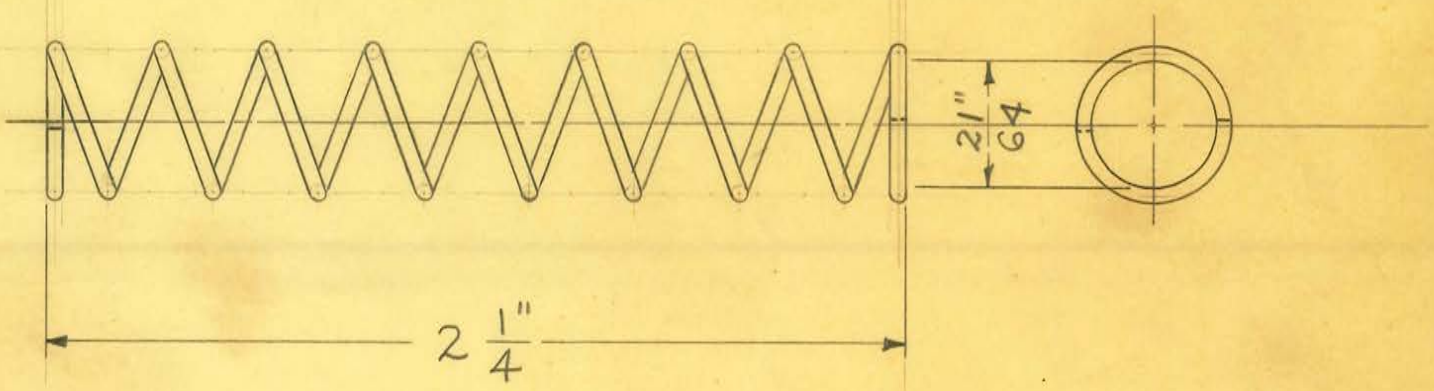


9 1/2 TURNS

SCALE ÷ DOUBLE SIZE

2 REQUIRED

OBSOLETE

| | | | |
|---|---|---|---|
| SIZE | .040" | ISSUE 5-6-46 | J.V.W. |
| KIND | PIANO WIRE | CHANGED | |
| SHAPE | | " | |
| FINISH | | " | |
| TEMP. | | " | |
| PATT. | | " | |

**TITLE:** UNIVERSAL "60-88" TUBE STAND FL, SCREEN ADJ. ARM & HORIZ. TUBE BRKT, LOCK PIN SPRING

H. G. FISCHER & CO.
2338 WABANSIA AVE.
CHICAGO, ILL.

CAT. NO.

PART NO. 8200A

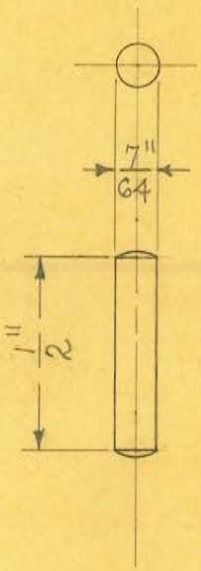


SCALE ~ DOUBLE SIZE
& REQUIRED

OBSOLETE

| | | | |
|---|---|---|---|
| SIZE | | ISSUE 4-13-33 | A.E. |
| KIND | C.R. STEEL | CHANGED | |
| SHAPE | | " " | |
| FINISH | CAD. #23 | " " | |
| TEMP. | | " " | |
| PATT. | | " " | |

**TITLE:** UNIVERSAL "GO-88" TUBE STAND FL. SCREEN ADJ. ARM & HOR. TUBE BRKT. LOCK PIN GUIDE PIN

H. G. FISCHER & CO.
2335 WABANSIA AVE.
CHICAGO, ILL.

CAT. NO.

PART NO. 8201

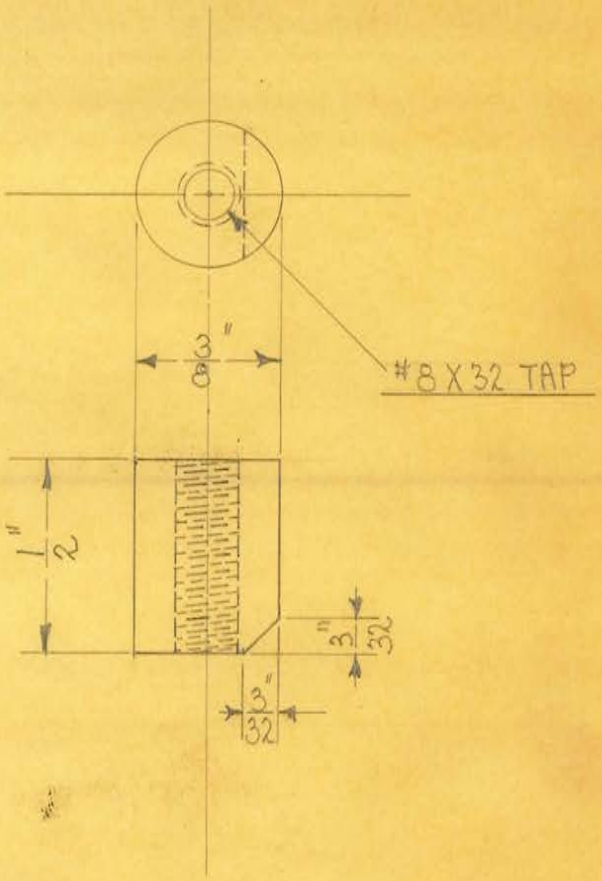


1 REQUIRED

SCALE 2 DIAMETERS

OBSOLETE

| | | | |
|---|---|---|---|
| SIZE | 3/8" | ISSUE | |
| KIND | BRASS ROD | CHANGED | |
| SHAPE | | " " | |
| FINISH | CAD. PLATE | " " | |
| TEMP. | | " " | |
| PATT. | | " " | |

**TITLE:** UNIVERSAL "60-88" TUBE STAND FLUOROSCOPIC SCREEN SWIVEL FRICTION PIECE - REAR

H. G. FISCHER & CO.
2335 WABANSIA AVE.
CHICAGO, ILL.

CAT. NO.

PART NO. 8204

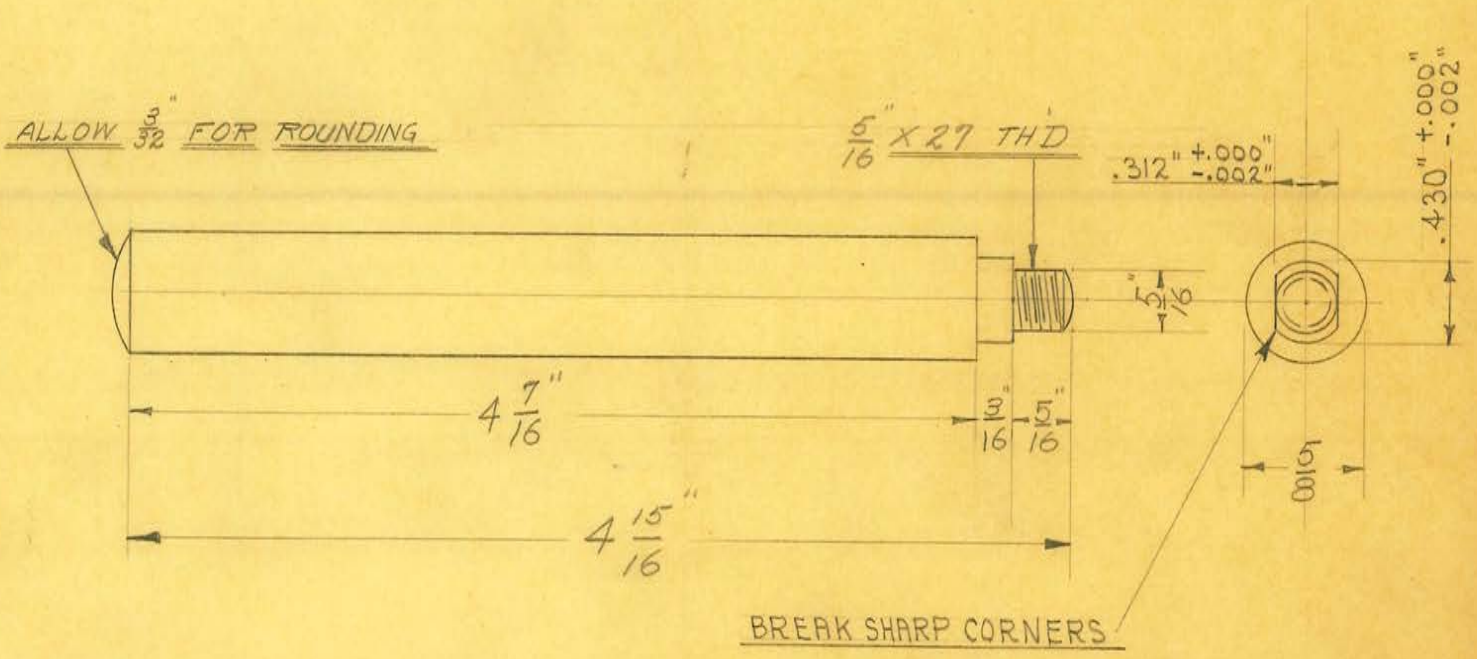


1 REQUIRED

OBSOLETE

| | | | | |
|---|---|---|---|---|
| SIZE | 5/16" ROD | ISSUE 11-8-33 | N.P. | TITLE: UNIVERSAL 60-88" TUBE STAND FL. SCREEN OFFSET SUPPORT FORK SHAFT |
| KIND | C.R. STEEL. | CHANGED | | |
| SHAPE | | " | | |
| FINISH | | " | | |
| TEMP. | | " | | |
| PATT. | | " | | |

H. G. FISCHER & CO.
2335 WABANSIA AVE.
CHICAGO, ILL.

CAT. NO.

PART NO. 8205 1/2

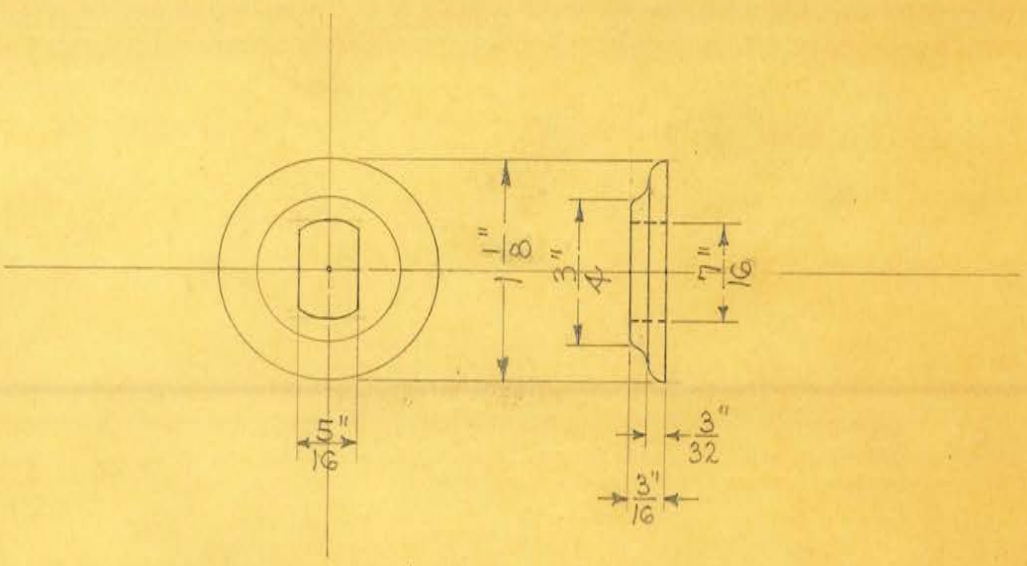


1 REQUIRED

OBSOLETE

| | | | | |
|---|---|---|---|---|
| SIZE | | ISSUE 6-5-33 | H.E. | TITLE: UNIVERSAL "60-88" TUBE STAND FL. SCREEN FORK D WASHER |
| KIND | BRASS | CHANGED | | |
| SHAPE | | " " | | |
| FINISH | CHROME POL. | " " | | |
| TEMP. | TOP SIDE | " " | | |
| PATT. | | " " | | |

H. G. FISCHER & CO.
2335 WABANSIA AVE.
CHICAGO, ILL.

CAT. NO.

PART NO. 8206

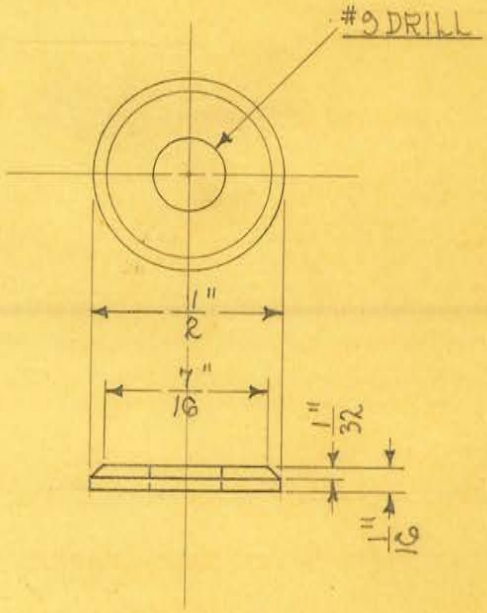


SCALE ~ 2 DIAMETERS

2 REQUIRED

OBSOLETE

| | | | | |
|---|---|---|---|---|
| SIZE | | ISSUE 4-26-33 | J.E. | TITLE: UNIVERSAL "60-88" TUBE STAND FL. SCREEN FORK WASHER |
| KIND | BRASS | CHANGED | | |
| SHAPE | | " " | | |
| FINISH | CAD. PLATE | " " | | |
| TEMP. | | " " | | |
| PATT. | | " " | | |

H. G. FISCHER & CO.
2335 WABANSIA AVE.
CHICAGO, ILL.

CAT. NO.

PART NO. 8207

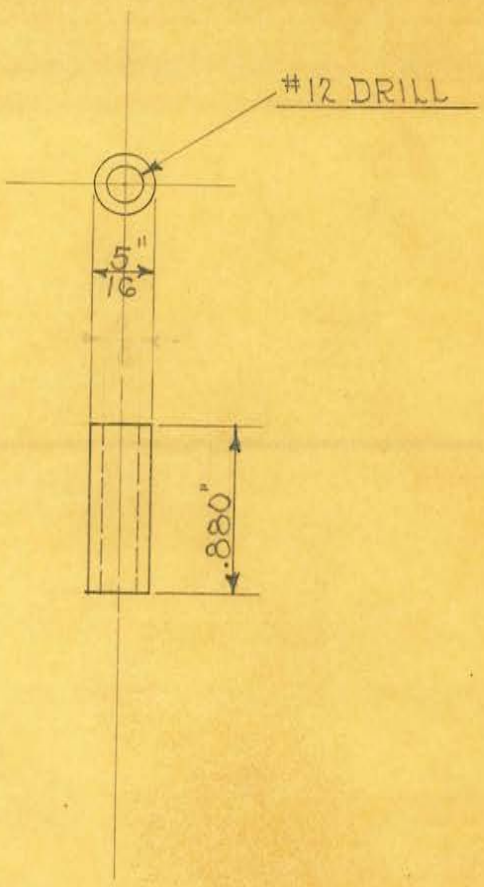


2 REQUIRED

OBSOLETE

| | | | | |
|---|---|---|---|---|
| SIZE | 5/16" | ISSUE 4-26-33 | H.E. | TITLE: UNIVERSAL "60-88" TUBE STAND FL. SCREEN FORK BUSHING |
| KIND | BRASS ROD | CHANGED | | |
| SHAPE | | " " | | |
| FINISH | CAD. PLATE | " " | | |
| TEMP. | | " " | | H. G. FISCHER & CO. 2335 WABANSIA AVE. CHICAGO, ILL. — CAT. NO. — PART NO. 8208 |
| PATT. | | " " | | |

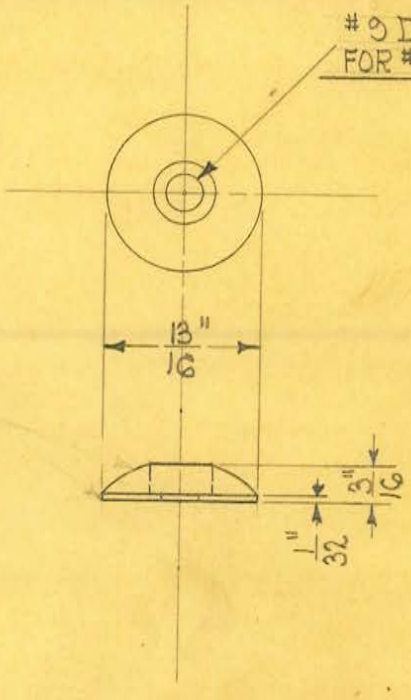


4 REQUIRED

OBSOLETE

| | | | | |
|---|---|---|---|---|
| SIZE | 13/16" | ISSUE 3-1-33 | A.E. | TITLE: UNIVERSAL "GO-88" TUBE STAND FLUOROSCOPIC SCREEN CLAMP WASHER |
| KIND | BRASS ROD | CHANGED | | |
| SHAPE | | " " | | |
| FINISH | CHROME POL. | " " | | |
| TEMP. | ROUNDED EDGE ONLY. | " " | | H. G. FISCHER & CO. 2335 WABANSIA AVE. CHICAGO, ILL. — CAT. NO. — PART NO. 8212 |
| PATT. | | " " | | |

2 HLS. #27 DRILL

4 HLS. #27 DRILL CSK. FOR #6 X 32 F. HD. SCR.

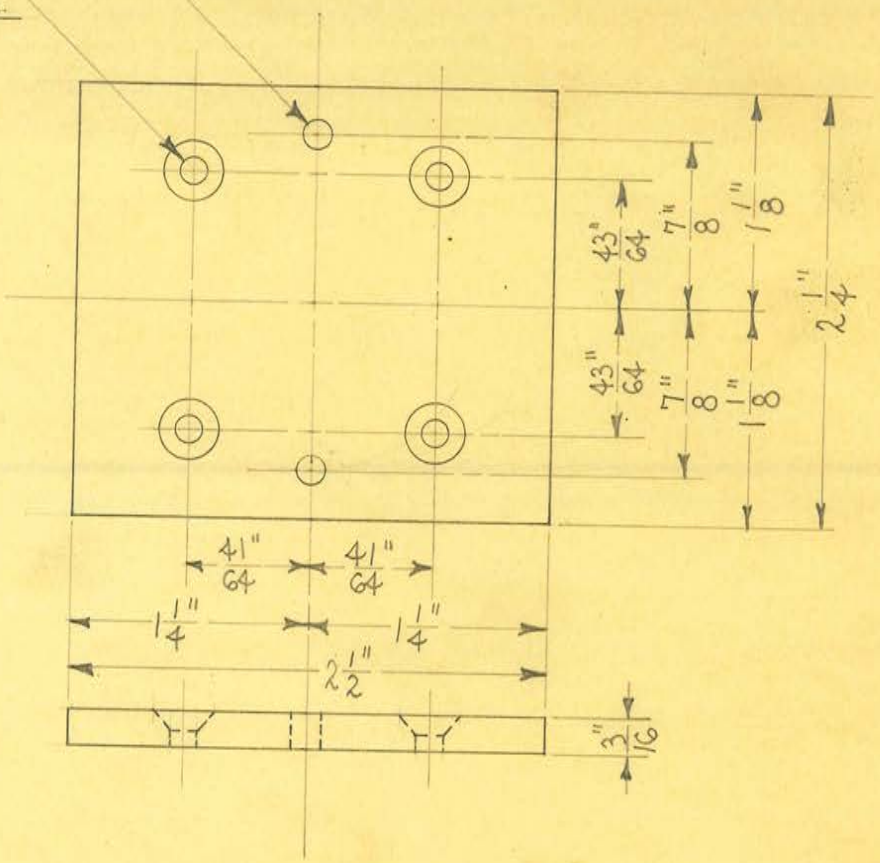


2 REQUIRED

OBSOLETE

| | | | |
|---|---|---|---|
| SIZE | 3/16" SHEET | ISSUE 4-13-35 | D.E. |
| KIND | RICHELAIN | CHANGED | |
| SHAPE | BAKELITE | " | |
| FINISH | | " | |
| TEMP. | | " | |
| PATT. | | " | |

**TITLE:** MODEL "DSW3" ULTRA SHORT WAVE H.F. OUTFIT
STAND-OFF INSULATOR BASE

H. G. FISCHER & CO.
2335 WABANSIA AVE.
CHICAGO, ILL

CAT. NO.

PART NO. 9123 1/2

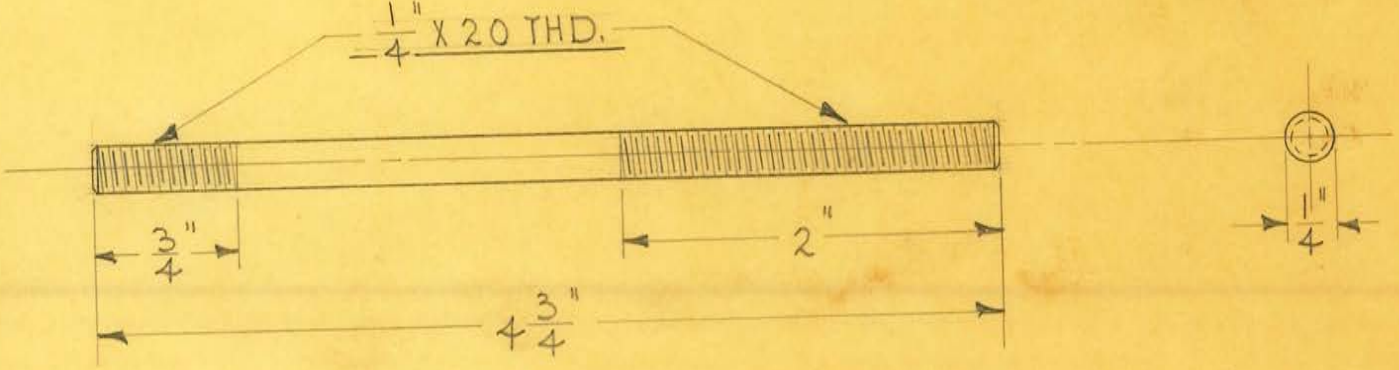


2 REQUIRED

OBSOLETE

| | | | |
|---|---|---|---|
| SIZE | 1/4" DIA. | ISSUE 3-3-44 | HE. |
| KIND | SCREW STOCK | CHANGED | |
| SHAPE | | " | |
| FINISH | | " | |
| TEMP. | | " | |
| PATT. | | " | |

**TITLE:** MOD. "USW 9" ULTRA SHORT WAVE H.F. OUTFIT-
POWER TRANSF. STUD ~ LONG

H. G. FISCHER & CO.
2335 WABANSIA AVE.
CHICAGO. ILL.

CAT. NO.

PART NO. 9129

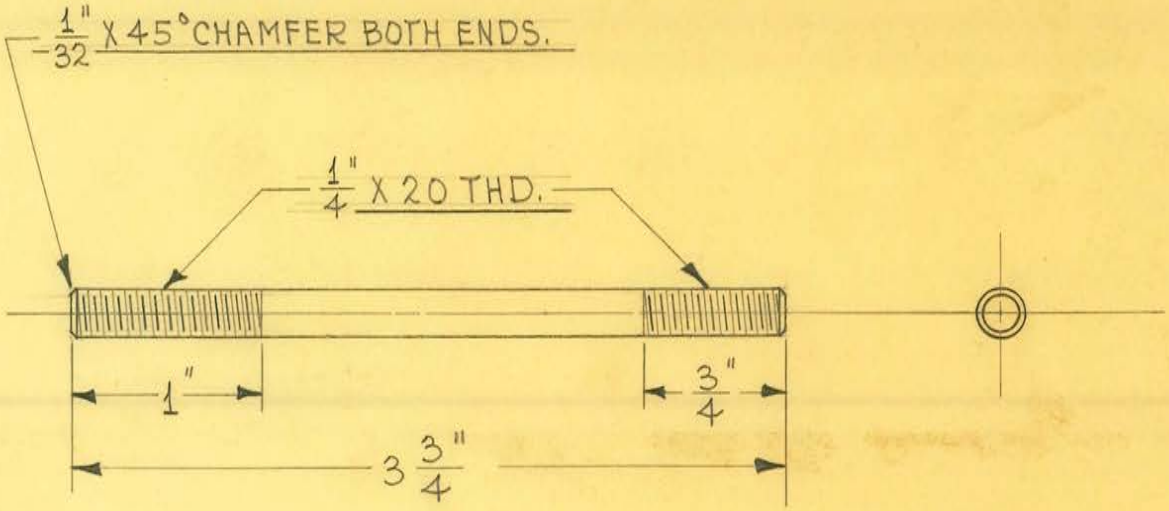


OBSOLETE

| | | | |
|---|---|---|---|
| SIZE | 1/4" DIAM. | ISSUE 5-4-45 | HE. |
| KIND | SCREW STOCK | CHANGED | |
| SHAPE | | " | |
| FINISH | | " | |
| TEMP. | | " | |
| PATT. | | " | |

**TITLE:** MOD. "USW 9" ULTRA SHORT WAVE H. F. OUTFIT ~ POWER TRANS. STUD ~ SHORT

H. G. FISCHER & CO.
2335 WABANSIA AVE.
CHICAGO. ILL.

CAT. NO.

PART NO. 9130

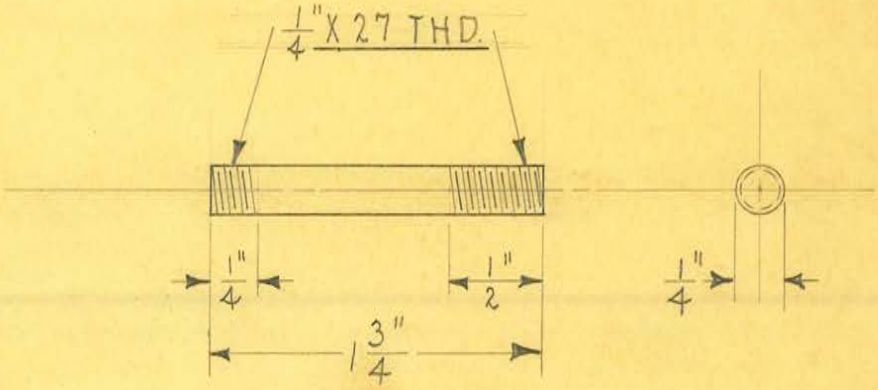


OBSOLETE

| | | | | |
|---|---|---|---|---|
| SIZE | 1/4" DIAM. | ISSUE 6-12-35 | B.E. | TITLE: MODEL "USW9" ULTRA SHORT WAVE H.F. OUTFIT CABINET BACK STUD |
| KIND | C.R. STEEL | CHANGED | | |
| SHAPE | | " | | |
| FINISH | | " | | |
| TEMP. | | " | | |
| PATT. | | " | | |

H. G. FISCHER & CO.
2335 WABANSIA AVE.
CHICAGO, ILL.

CAT. NO.

PART NO. 9131

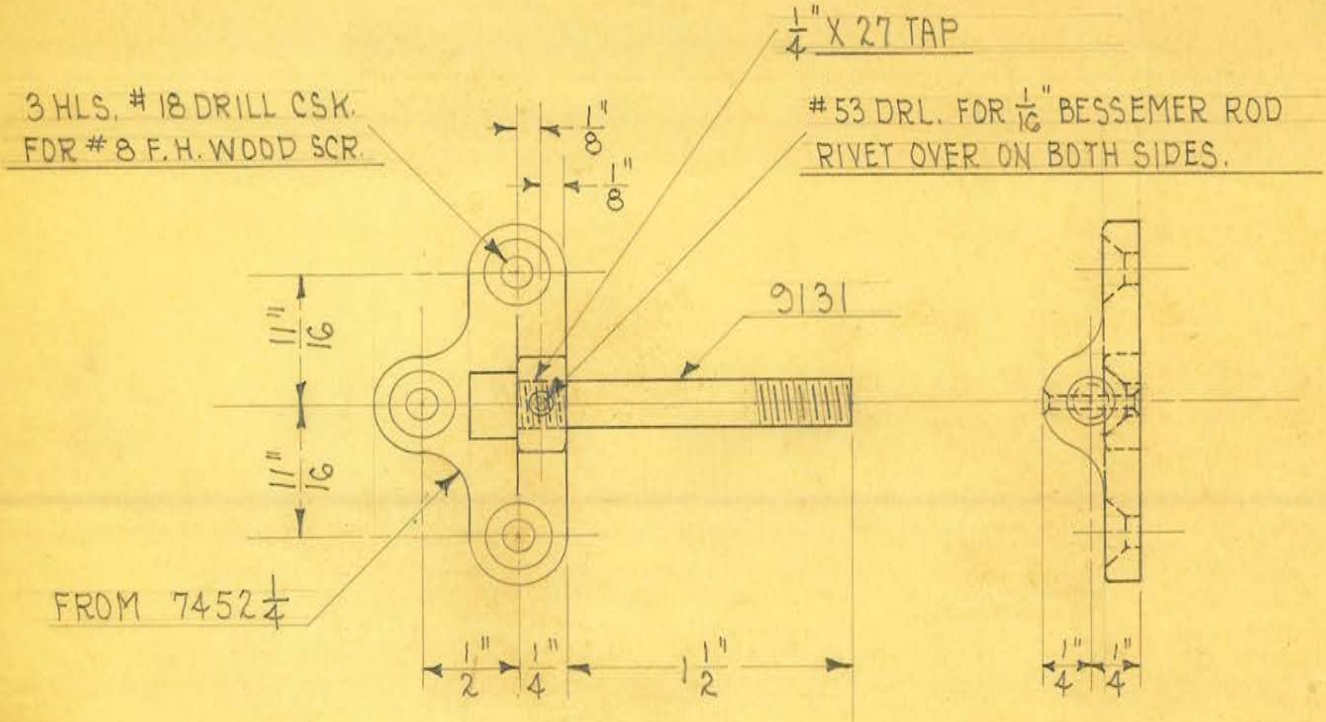


2 REQUIRED

OBSOLETE

| | | | |
|---|---|---|---|
| SIZE | | ISSUE 6-12-35 | A.E. |
| KIND | | CHANGED | |
| SHAPE | | " | |
| FINISH | | " | |
| TEMP. | | " | |
| PATT. | | " | |

**TITLE:** MODEL "USW 9" ULTRA SHORT WAVE H.F. OUTFIT
CABINET BACK STUD ASSEM.

H. G. FISCHER & CO.
2335 WABANSIA AVE.
CHICAGO, ILL.

CAT. NO.

PART NO. 9131G

#27 DRILL THRU-
5° TAPER REAMER
TO $\frac{7}{32}$" FACE

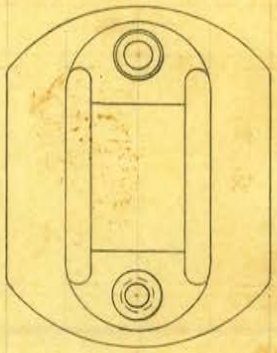

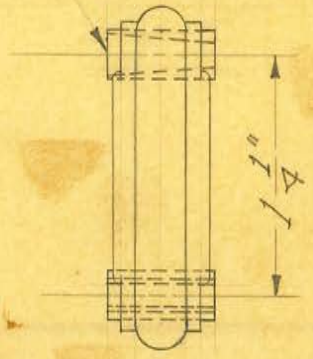


2 REQUIRED

OBSOLETE

| | | | |
|---|---|---|---|
| SIZE | | ISSUE 12-21-37 | J.W. |
| KIND | FROM 9132GA | CHANGED | |
| SHAPE | | " | |
| FINISH | | " | |
| TEMP. | | " | |
| PATT. | | " | |

**TITLE:**
FISCHER "SWDI" SHORT WAVE
5000 VOLT (.002 MFD) FIXED CONDENSER
(DRILLED)

H. G. FISCHER & CO.
2335 WABANSIA AVE.
CHICAGO, ILL.

CAT. NO.

PART NO. 9132 $\frac{1}{2}$ G

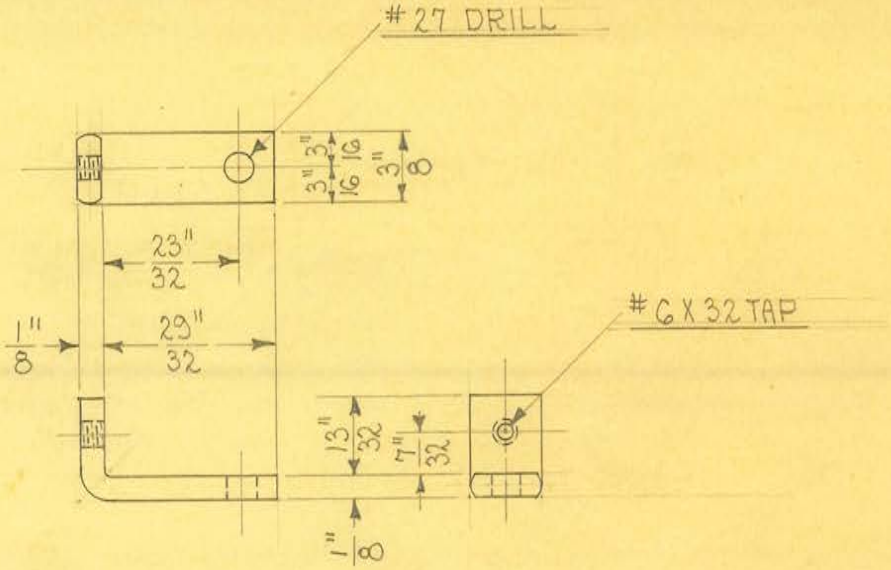


8 REQUIRED

OBSOLETE

| | | | |
|---|---|---|---|
| SIZE | 1/8" X 3/8" | ISSUE 1-9-35 | A.E. |
| KIND | FLAT WIRE | CHANGED | |
| SHAPE | | " | |
| FINISH | | " | |
| TEMP. | | " | |
| PATT. | | " | |

**TITLE:** MOD. "USW9" ULTRA SHORT WAVE H.F. OUTFIT
VENTILATING PLATE NUT

H. G. FISCHER & CO.
2335 WABANSIA AVE.
CHICAGO, ILL

CAT. NO.

PART NO. 9135

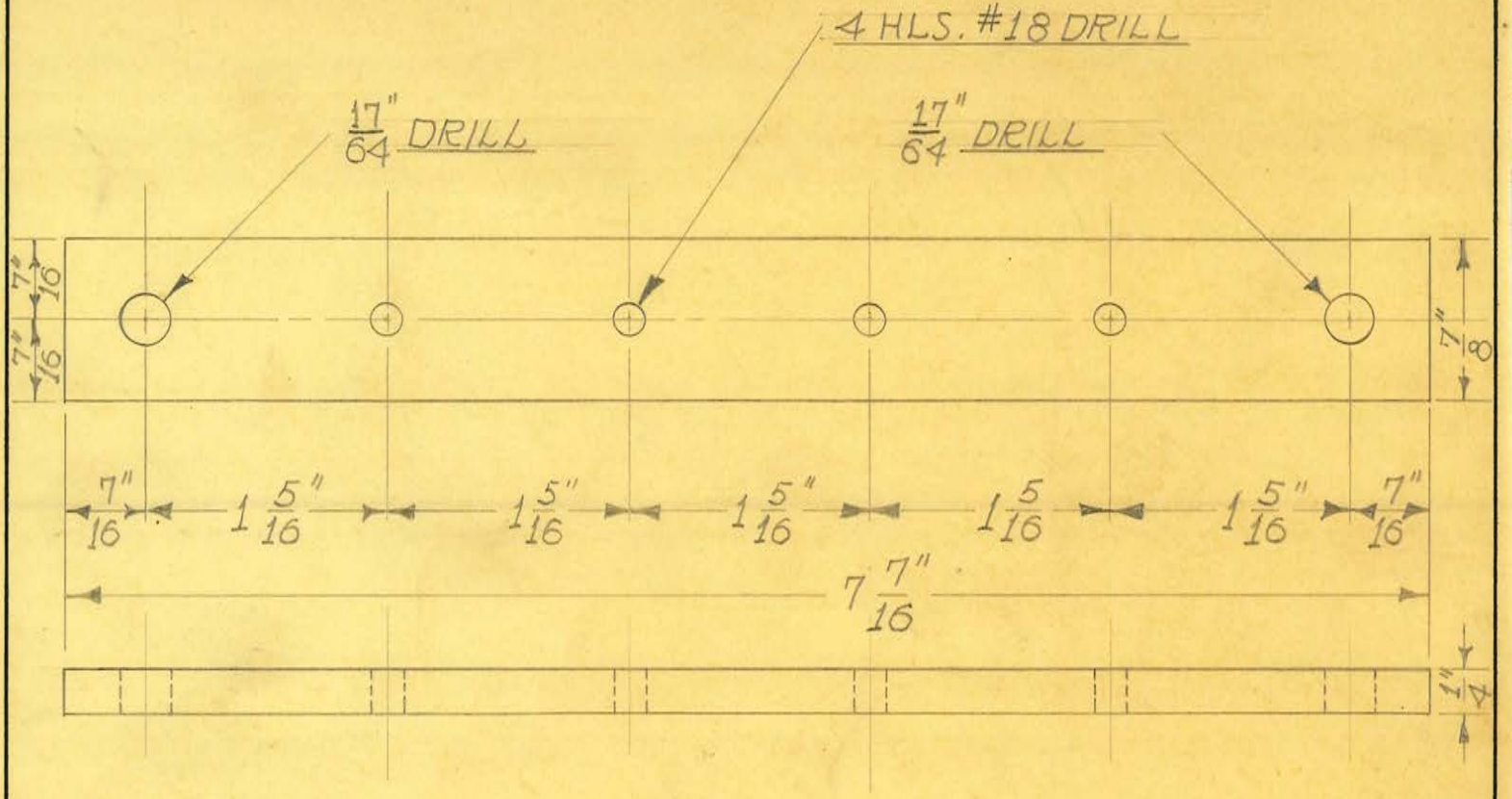


1 REQUIRED

OBSOLETE

| | | | | |
|---|---|---|---|---|
| SIZE | 1/4" RICHELAIN | ISSUE 11-11-35 | J. W. | TITLE: MODEL "USW-9A" ULTRA SHORT WAVE HIGH FREQ. OUTFIT POWER TRANSF. TERM. STRIP |
| KIND | BAKELITE | CHANGED | | |
| SHAPE | SHEET | " | | |
| FINISH | | " | | |
| TEMP. | | " | | |
| PATT. | | " | | |

H. G. FISCHER & CO.
2335 WABANSIA AVE.
CHICAGO, ILL.

CAT. NO.

PART NO. 9144

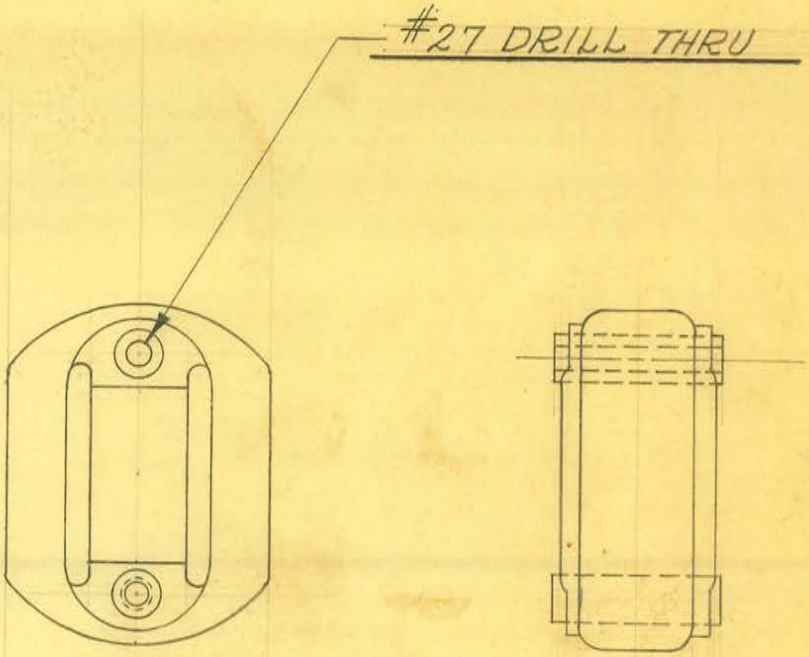


1 REQUIRED

OBSOLETE

| | | | |
|---|---|---|---|
| SIZE | FROM 9149G | ISSUE 3-13-40 | J.W. |
| KIND | | CHANGED | |
| SHAPE | | " | |
| FINISH | | " | |
| TEMP. | | " | |
| PATT. | | " | |

**TITLE:** MOD. "USW-9" ULTRA SHORT WAVE H.F. OUTFIT
7500 VOLT (.002 MFD.) FIXED CONDENSER
(DRILLED)

H. G. FISCHER & CO.
2335 WABANSIA AVE.
CHICAGO, ILL.

CAT. NO.

PART NO. 9149GF

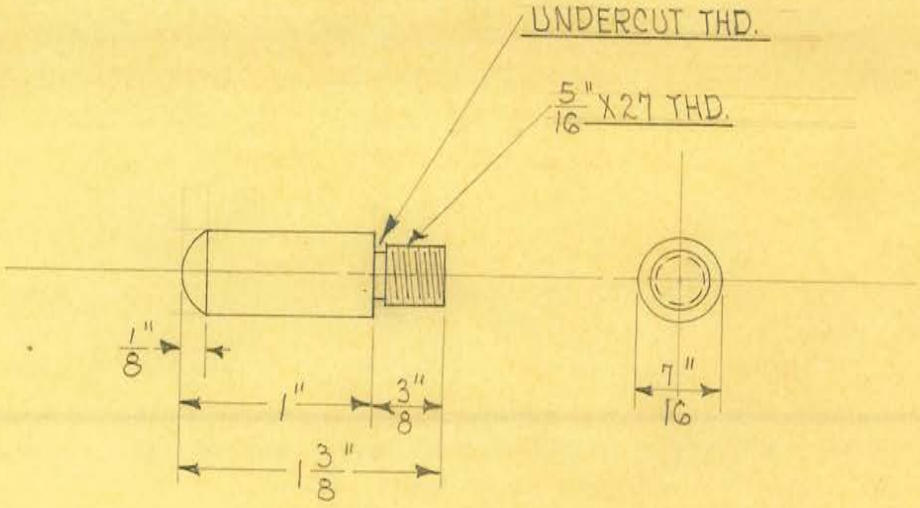


4 REQUIRED

OBSOLETE

| | | | | |
|---|---|---|---|---|
| SIZE | 7/16" | ISSUE 12-4-34 | A.E. | **TITLE:** PORTABLE SHOCKPROOF X-RAY CARRIAGE LOCATING STUD |
| KIND | C.R. STEEL | CHANGED | | |
| SHAPE | | " | | |
| FINISH | CAD. #23 | " | | |
| TEMP. | | " | | |
| PATT. | | " | | |

H. G. FISCHER & CO.
2335 WABANSIA AVE.
CHICAGO, ILL

CAT. NO.

PART NO. 9211

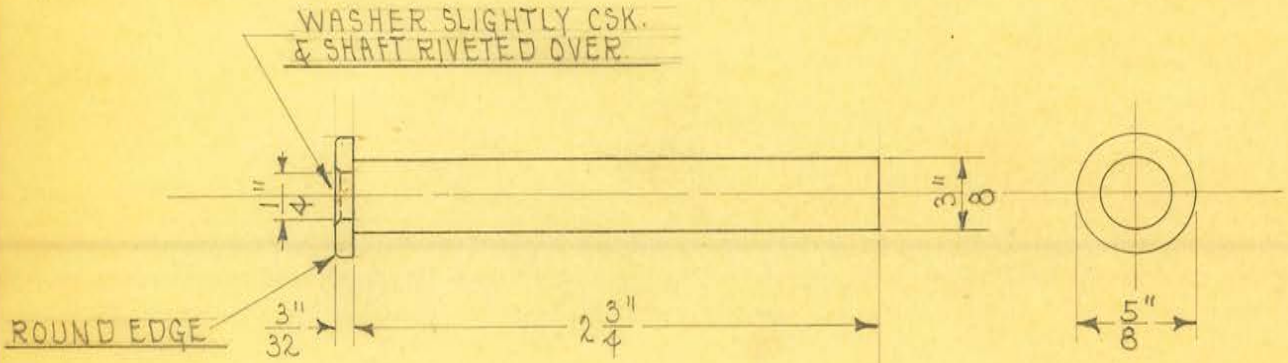


1 REQUIRED

OBSOLETE

| | | | | |
|---|---|---|---|---|
| SIZE | | ISSUE 12-7-34 | 2.8. | **TITLE:** PORTABLE SHOCKPROOF X-RAY CARRIAGE ROLLER SHAFT |
| KIND | C.R. STEEL | CHANGED | | |
| SHAPE | | " | | |
| FINISH | CAD. #23 | " | | |
| TEMP. | | " | | |
| PATT. | | " | | |

| | | |
|---|---|---|
| H. G. FISCHER & CO. 2335 WABANSIA AVE. CHICAGO, ILL | CAT. NO. | PART NO. 9212G |

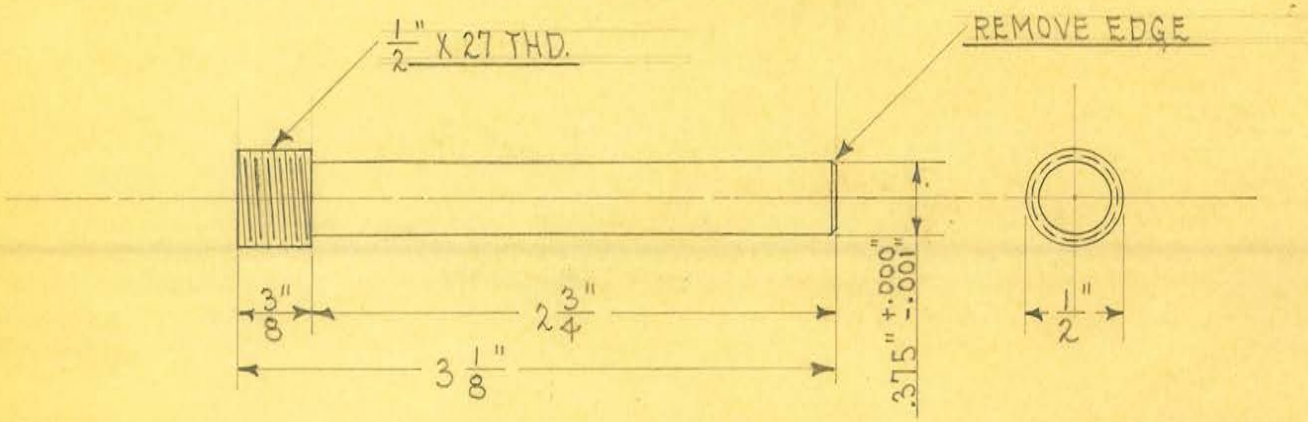


1 REQUIRED

OBSOLETE

| | | | | |
|---|---|---|---|---|
| SIZE | 1/2" | ISSUE 12-4-34 | 2/8 | **TITLE:** PORTABLE SHOCKPROOF X-RAY CARRIAGE BRAKE ROLLER SHAFT |
| KIND | C.R. STEEL | CHANGED | | |
| SHAPE | | " | | |
| FINISH | CAD. #23 | " | | |
| TEMP. | | " | | |
| PATT. | | " | | |

H. G. FISCHER & CO.
2335 WABANSIA AVE.
CHICAGO, ILL

CAT. NO.

PART NO. 9213

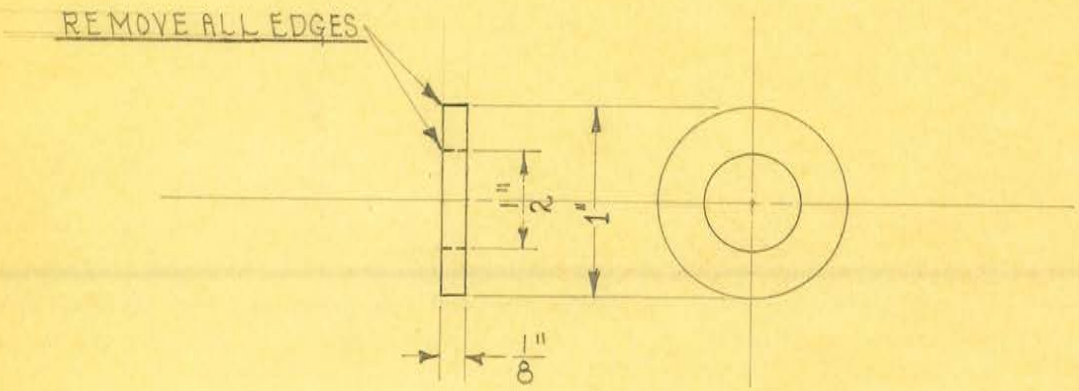


1 REQUIRED

OBSOLETE

| | | | | |
|---|---|---|---|---|
| SIZE | 1" | ISSUE 12-3-34 | A.E. | **TITLE:** PORTABLE SHOCKPROOF X-RAY CARRIAGE BRAKE WASHER |
| KIND | C.R. STEEL | CHANGED | | |
| SHAPE | | " | | |
| FINISH | CAD. #23 | " | | |
| TEMP. | | " | | |
| PATT. | | " | | |

H. G. FISCHER & CO.
2335 WABANSIA AVE.
CHICAGO, ILL

CAT. NO.

PART NO. 9214

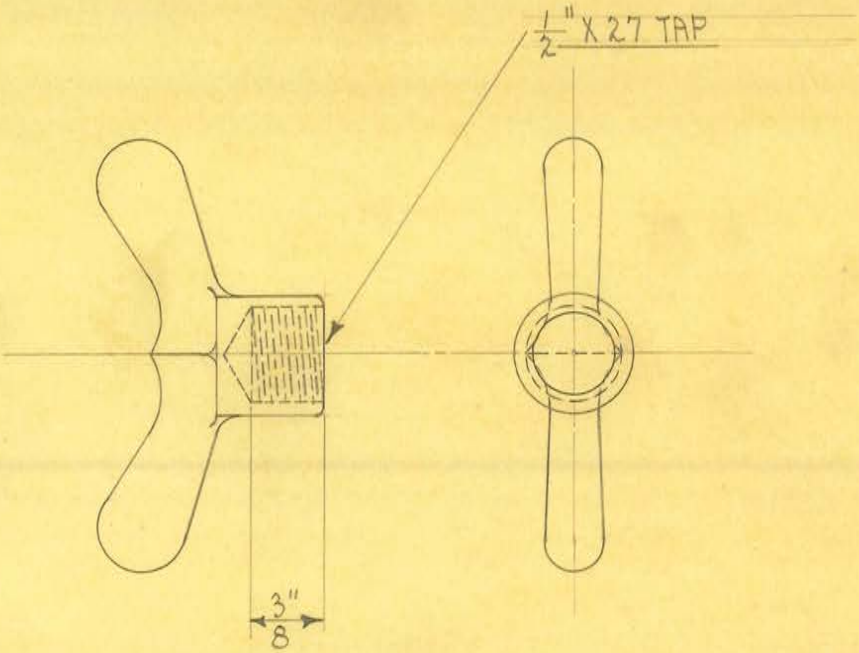


1 REQUIRED

FROM 5705

OBSOLETE

| | | | | |
|---|---|---|---|---|
| SIZE | | ISSUE 12-8-34 | H.E. | **TITLE:** PORTABLE SHOCKPROOF X-RAY CARRIAGE BRAKE WING NUT |
| KIND | CAST IRON | CHANGED | | |
| SHAPE | | " | | |
| FINISH | BLACK #50 | " | | |
| TEMP. | | " | | |
| PATT. | | " | | |

| | | |
|---|---|---|
| H. G. FISCHER & CO. 2335 WABANSIA AVE. CHICAGO, ILL | CAT. NO. | PART NO. 9215 |

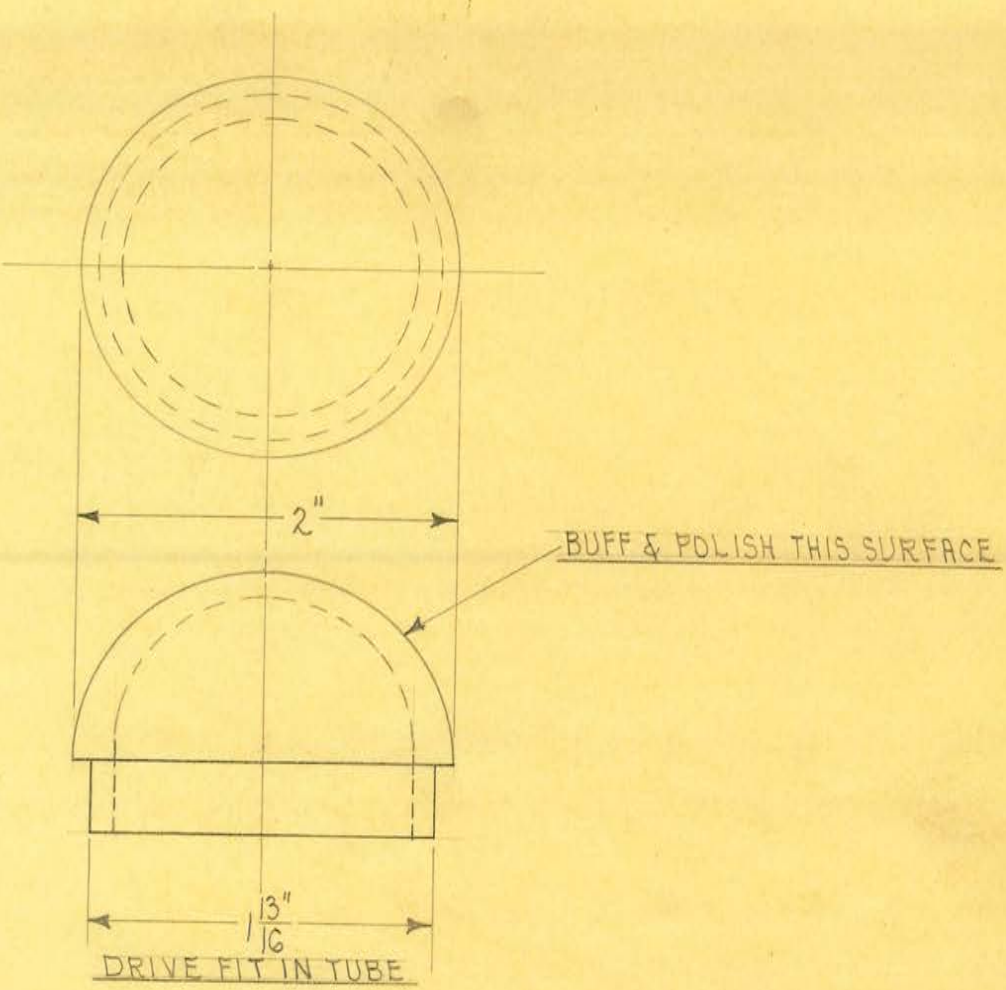


OBSOLETE

| | | | |
|---|---|---|---|
| SIZE | | ISSUE 12-4-34 | J.E. |
| KIND | ALUM. CASTING | CHANGED | |
| SHAPE | | " | |
| FINISH | SEE ABOVE | " | |
| TEMP. | | " | |
| PATT. | 4776-782 | " | |

**TITLE:** PORTABLE SHOCKPROOF X-RAY UPRIGHT TUBE CAP

H. G. FISCHER & CO.
2335 WABANSIA AVE.
CHICAGO, ILL

CAT. NO.

PART NO. 9221F

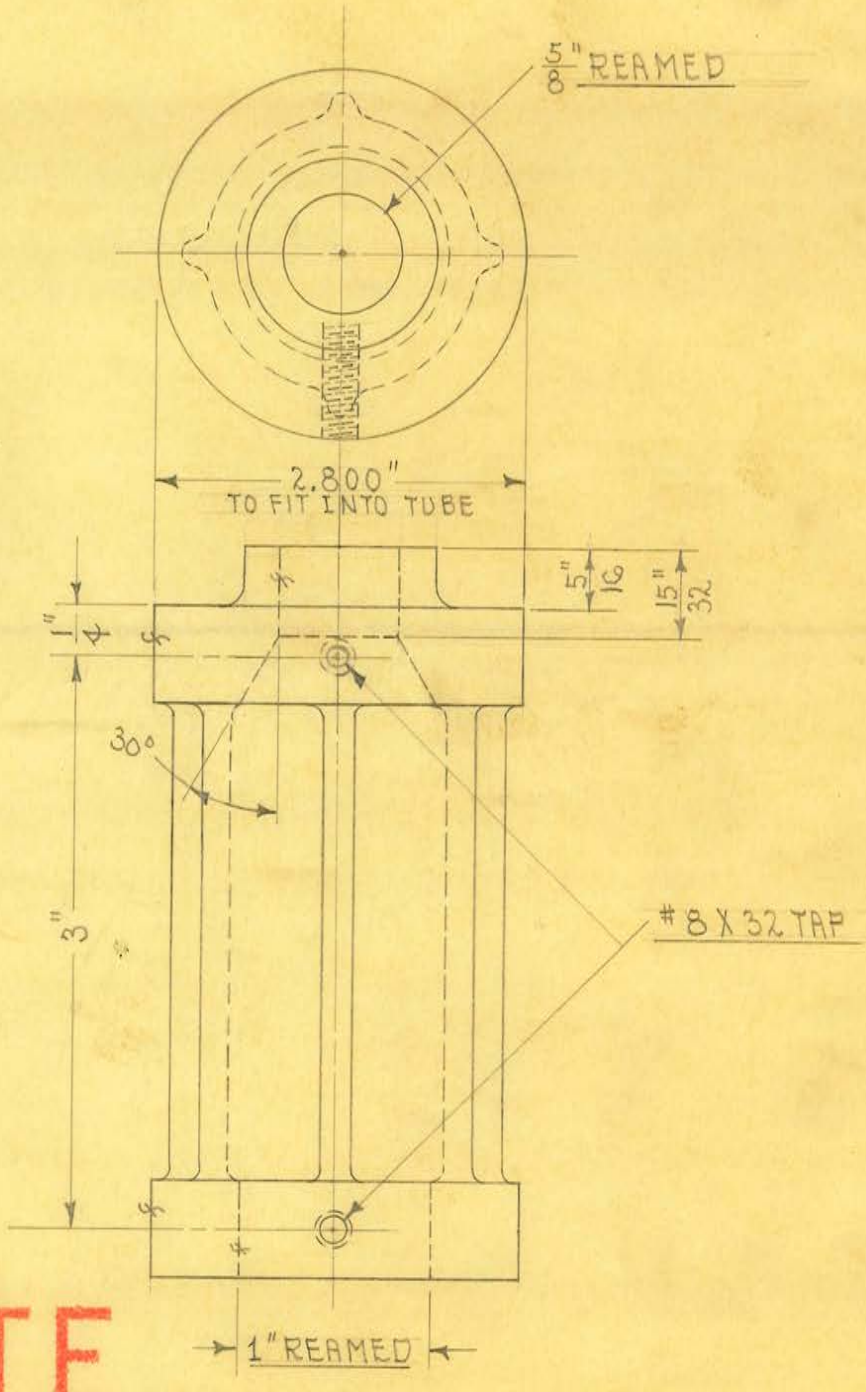


OBSOLETE

1 REQUIRED

| | | | |
|---|---|---|---|
| SIZE | | ISSUE 12-6-34 | A.E. |
| KIND | IRON CASTING | CHANGED | |
| SHAPE | | " | |
| FINISH | | " | |
| TEMP. | | " | |
| PATT. | 3860-770 | " | |

**TITLE:** PORTABLE SHOCKPROOF X-RAY UPRIGHT TUBE BEARING

H. G. FISCHER & CO.
2335 WABANSIA AVE.
CHICAGO, ILL

CAT. NO.

PART NO. 9222F

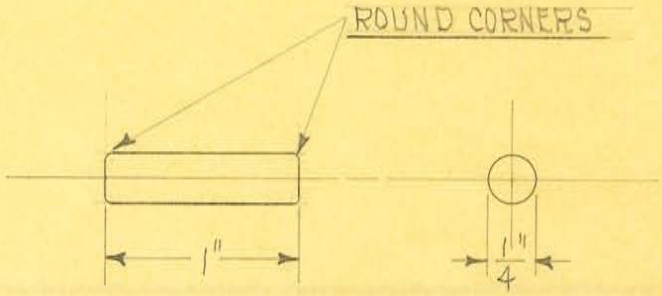


1 REQUIRED

OBSOLETE

| | | | | |
|---|---|---|---|---|
| SIZE | 1/4" | ISSUE 12-6-34 | D.E. | **TITLE:** PORTABLE SHOCKPROOF X-RAY UPRIGHT TUBE BEARING SHAFT PIN |
| KIND | C.R. STEEL | CHANGED | | |
| SHAPE | | " | | |
| FINISH | CAD. #23 | " | | |
| TEMP. | | " | | |
| PATT. | | " | | |

H. G. FISCHER & CO.
2335 WABANSIA AVE.
CHICAGO, ILL

CAT. NO.

PART NO. 9224

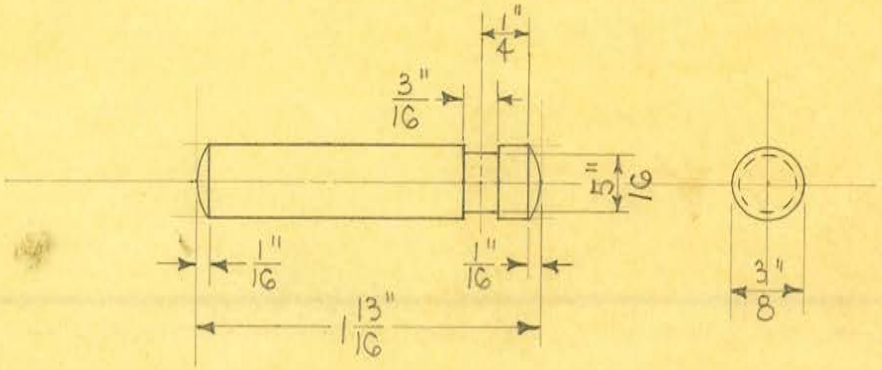


2 REQUIRED

OBSOLETE

| | | | | |
|---|---|---|---|---|
| SIZE | 3/8" | ISSUE 12-10-34 | H.E. | **TITLE:** PORTABLE SHOCKPROOF X-RAY UPRIGHT TUBE SUPPORT PIN |
| KIND | C.R. STEEL | CHANGED | | |
| SHAPE | | " | | |
| FINISH | CAD. # 23 | " | | |
| TEMP. | | " | | |
| PATT. | | " | | |

H. G. FISCHER & Co.
2335 WABANSIA AVE.
CHICAGO, ILL

CAT. NO.

PART NO. 9226

67

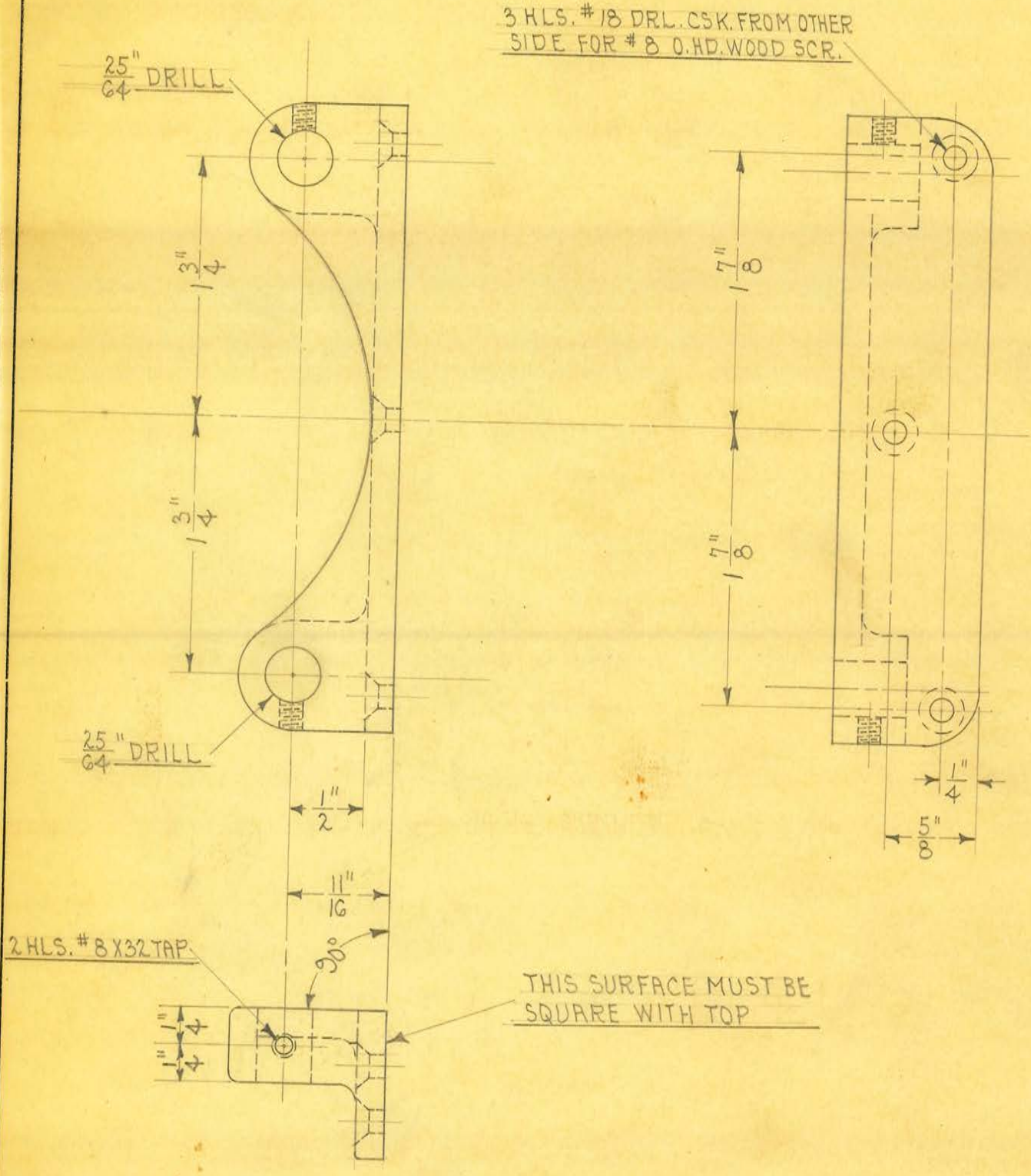


OBSOLETE

1 REQUIRED

| | | | |
|---|---|---|---|
| SIZE | | ISSUE 12-8-34 | H.E. |
| KIND | IRON CASTING | CHANGED | |
| SHAPE | | " | |
| FINISH | CAD. #23 | " | |
| TEMP. | | " | |
| PATT. | 4846-787 | " | |

**TITLE:** PORTABLE SHOCKPROOF X-RAY UPRIGHT TUBE SUPPORT BRACKET

H. G. FISCHER & CO.
2335 WABANSIA AVE.
CHICAGO, ILL

CAT. NO.

PART NO. 9227F

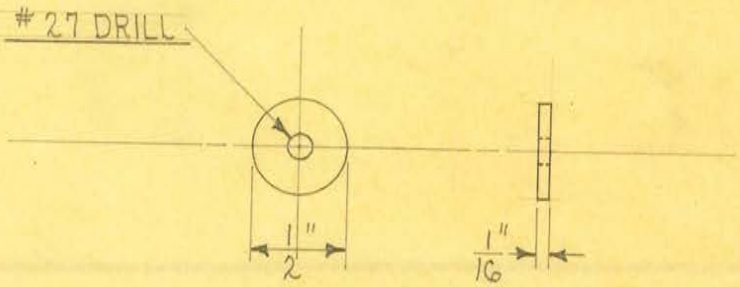


3 REQUIRED

OBSOLETE

| | | | |
|---|---|---|---|
| SIZE | 1/2" | ISSUE 12-10-34 | J.E. |
| KIND | C.R. STEEL | CHANGED | |
| SHAPE | | " | |
| FINISH | CAD. #23 | " | |
| TEMP. | | " | |
| PATT. | | " | |

**TITLE:** PORTABLE SHOCKPROOF X-RAY UPRIGHT TUBE SUPPORT WASHER

H. G. FISCHER & CO.
2335 WABANSIA AVE.
CHICAGO, ILL

CAT. NO.

PART NO. 9229

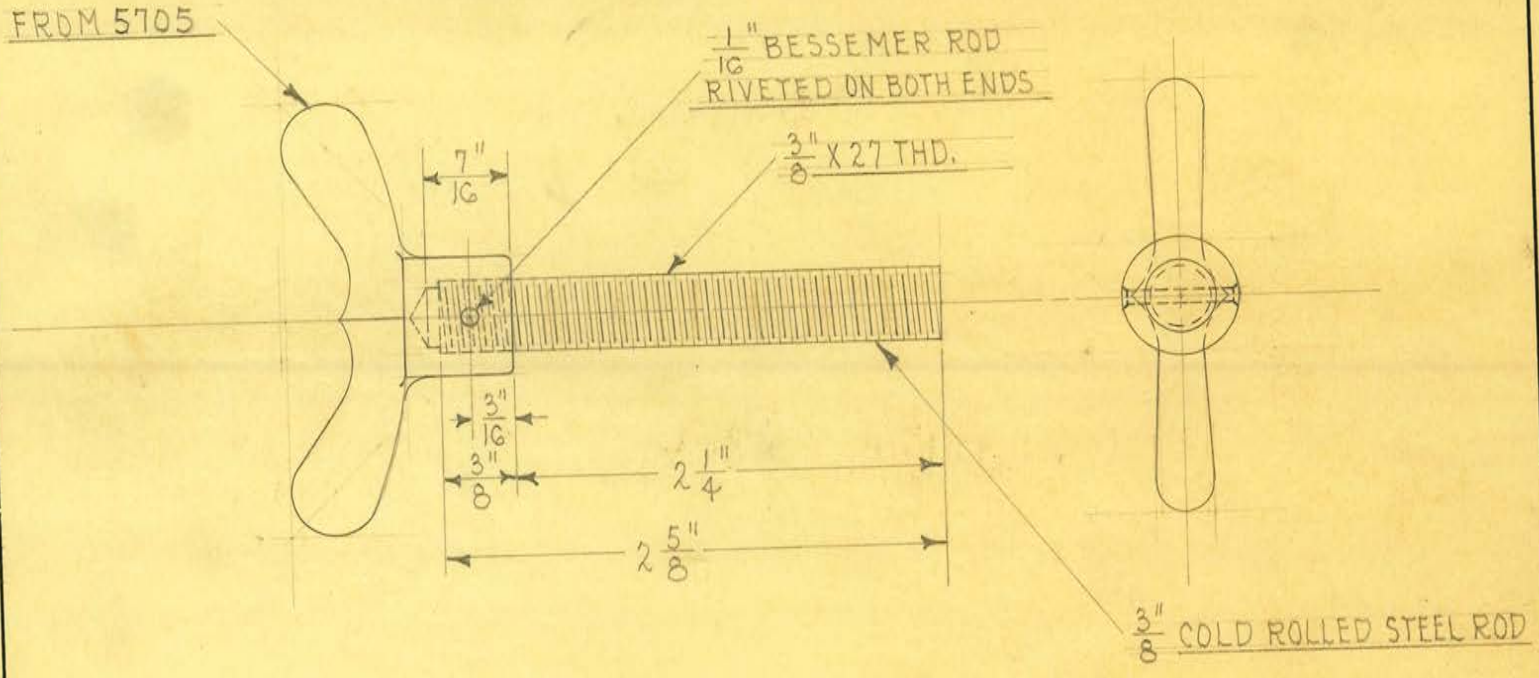


1 REQUIRED

OBSOLETE

| | | | | |
|---|---|---|---|---|
| SIZE | | ISSUE 11-22-34 | A.E. | TITLE: PORTABLE SHOCKPROOF X-RAY UPRIGHT TUBE CLAMP SCREW |
| KIND | | CHANGED | | |
| SHAPE | | " | | |
| FINISH | | " | | |
| TEMP. | | " | | H. G. FISCHER & CO. 2335 WABANSIA AVE. CHICAGO, ILL. / CAT. NO. / PART NO. 9230G |
| PATT. | | " | | |

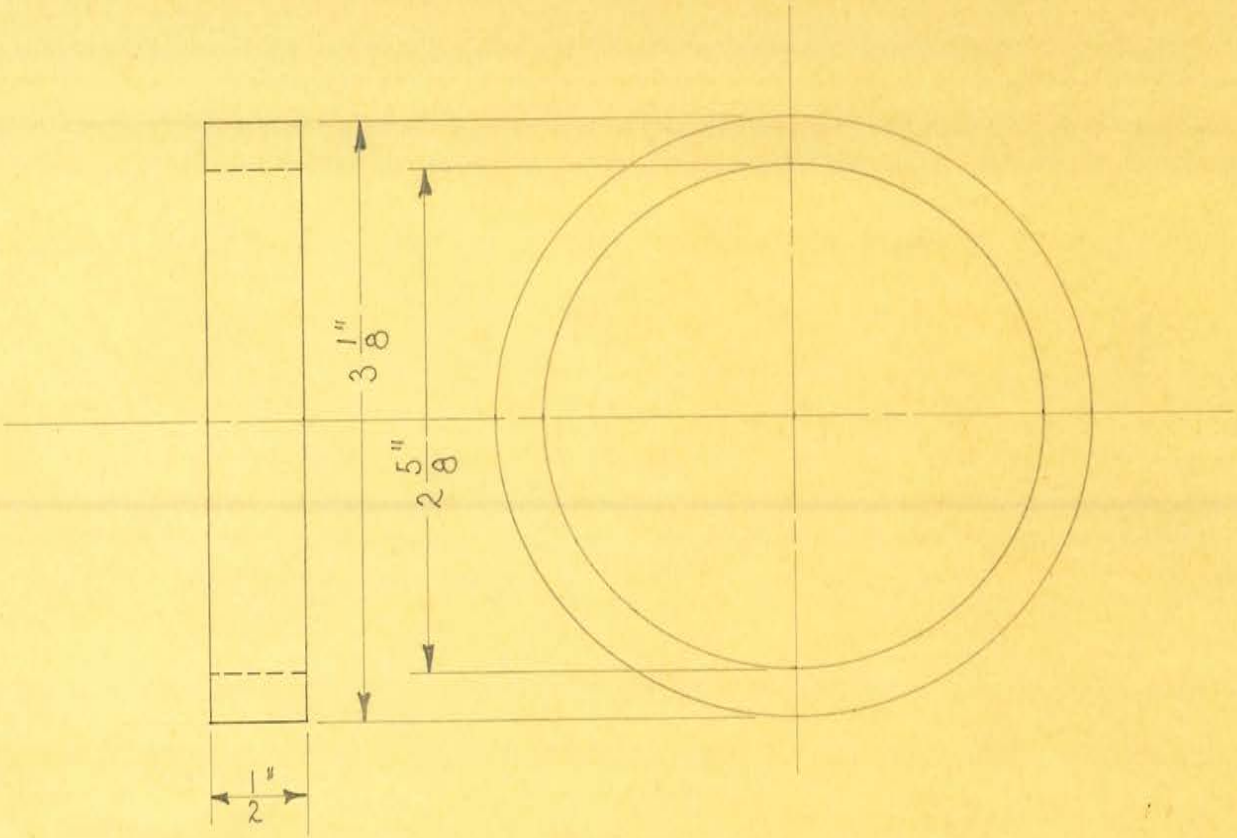


2 REQUIRED

OBSOLETE

| | | | |
|---|---|---|---|
| SIZE | 2 5/8" I.D. X 3 1/8" O.D. | ISSUE 11-6-35 | J.H.F. |
| KIND | NAT. BAKELITE | CHANGED | |
| SHAPE | TUBING | " | |
| FINISH | | " | |
| TEMP. | | " | |
| PATT. | | " | |

**TITLE:** FISCHER "DSP-20" HIGH TENSION TRANSFORMER SECONDARY SEPARATOR-END

| | | |
|---|---|---|
| H. G. FISCHER & CO. 2335 WABANSIA AVE. CHICAGO, ILL. | CAT. NO. | PART NO. 9233 |

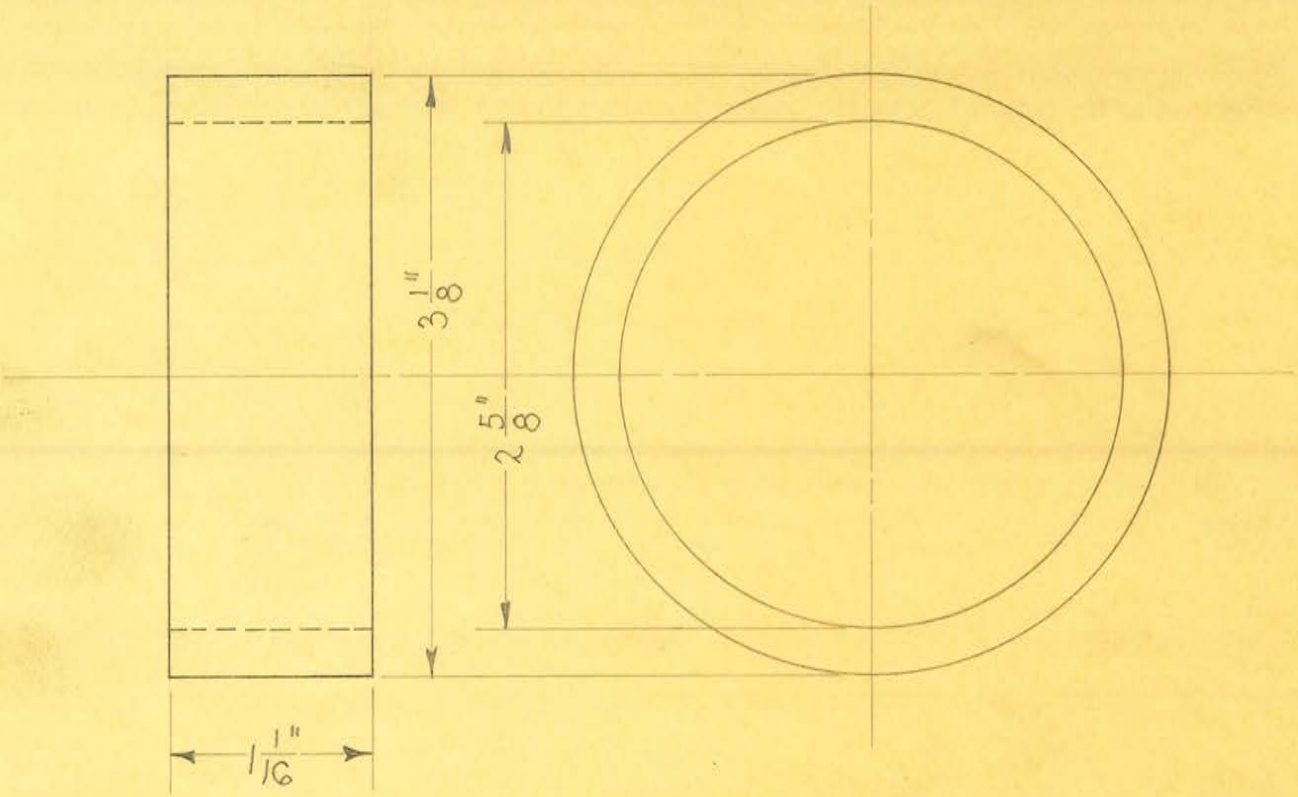


1 REQUIRED

OBSOLETE

| | | | |
|---|---|---|---|
| SIZE | $2\frac{5}{8}$" I.D. X $3\frac{1}{8}$" O.D. | ISSUE 11-6-35 | A.E. |
| KIND | NAT. BAKELITE | CHANGED | |
| SHAPE | TUBING | " | |
| FINISH | | " | |
| TEMP. | | " | |
| PATT. | | " | |

**TITLE:** FISCHER "DSP-20" HIGH TENSION TRANSFORMER SECONDARY SEPARATOR-CENTER

H. G. FISCHER & CO.
2335 WABANSIA AVE.
CHICAGO, ILL.

CAT. NO.

PART NO. 9234

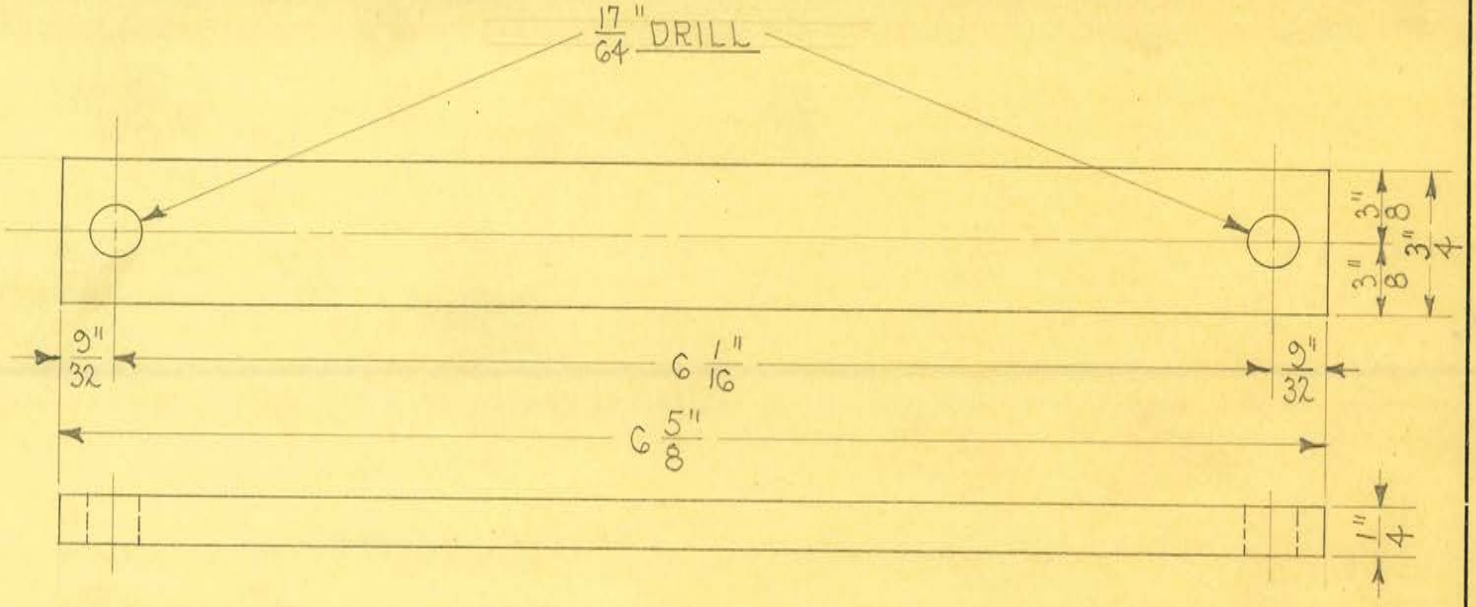


2 REQUIRED

OBSOLETE

| | | | | |
|---|---|---|---|---|
| SIZE | 3/4" X 1/4" | ISSUE 11-6-34 | A.E. | **TITLE:** PORTABLE SHOCKPROOF X-RAY TRANSFORMER STRAP |
| KIND | C.R. STEEL | CHANGED | | |
| SHAPE | | " | | |
| FINISH | | " | | |
| TEMP. | | " | | |
| PATT. | | " | | |

H. G. FISCHER & CO.
2335 WABANSIA AVE.
CHICAGO, ILL

CAT. NO.

PART NO. 9242

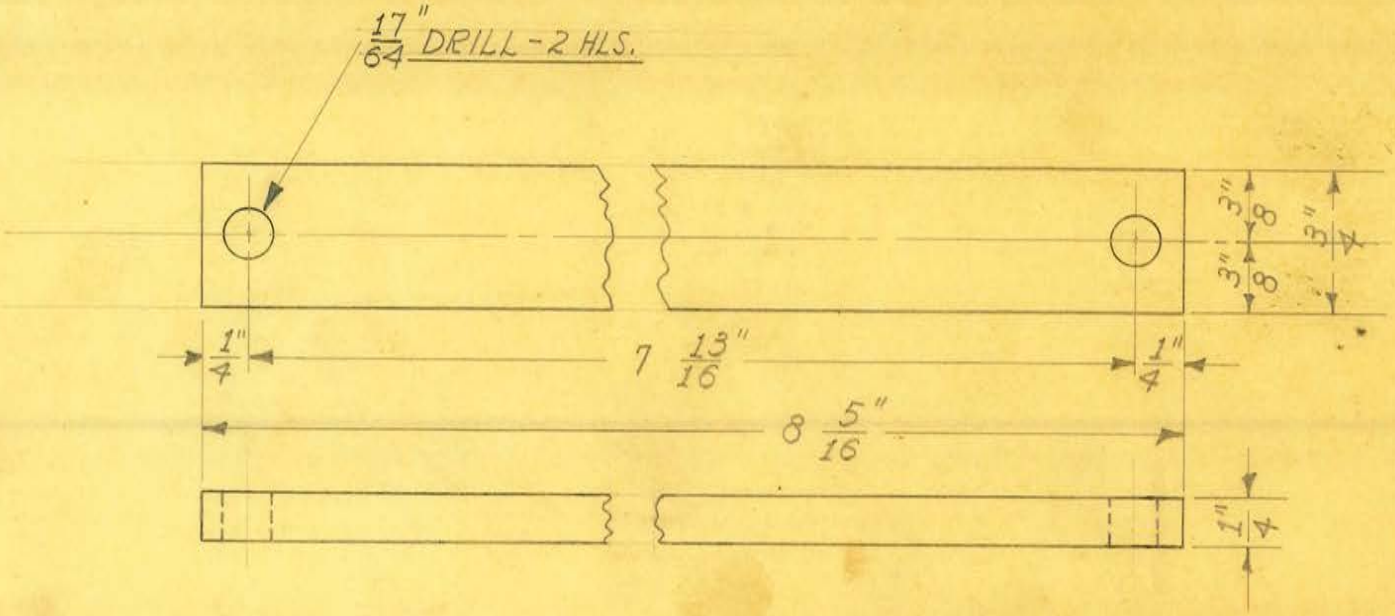


2 REQUIRED

OBSOLETE

| | | | | |
|---|---|---|---|---|
| SIZE | 3/4" X 1/4" | ISSUE 8-21-36 | J. W. | TITLE: 25 CYCLE "DSP-20" HIGH TENSION TRANSFORMER STRAP |
| KIND | C.R. STEEL | CHANGED | | |
| SHAPE | | " | | |
| FINISH | | " | | |
| TEMP. | | " | | |
| PATT. | | " | | |

H. G. FISCHER & CO.
2335 WABANSIA AVE.
CHICAGO, ILL.

CAT. NO.

PART NO. 9242 1/2

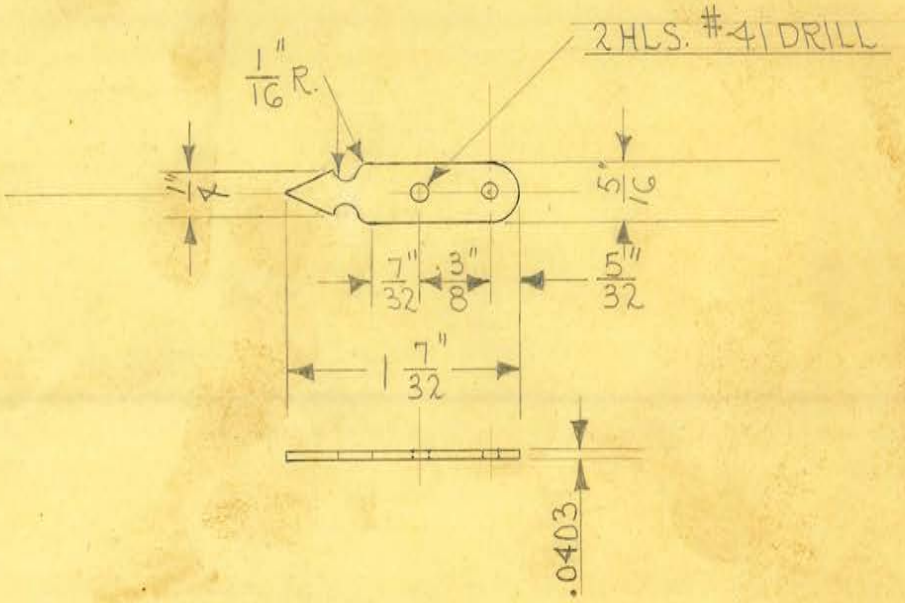


OBSOLETE

| | | | | | |
|---|---|---|---|---|---|
| SIZE | #18 GA | ISSUE 8-16-35 | J.W | TITLE: MOD. "SP-60" SHOCKPROOF RAD. UNIT ANGLE PLATE INDICATOR - BLANK | |
| KIND | SHEET BRASS | CHANGED | | | |
| SHAPE | | " | | | |
| FINISH | | " | | | |
| TEMP. | | " | | | |
| PATT. | | " | | | |

| | | |
|---|---|---|
| H. G. FISCHER & CO. 2335 WABANSIA AVE. CHICAGO, ILL. | CAT. NO. | PART NO. 9755 |

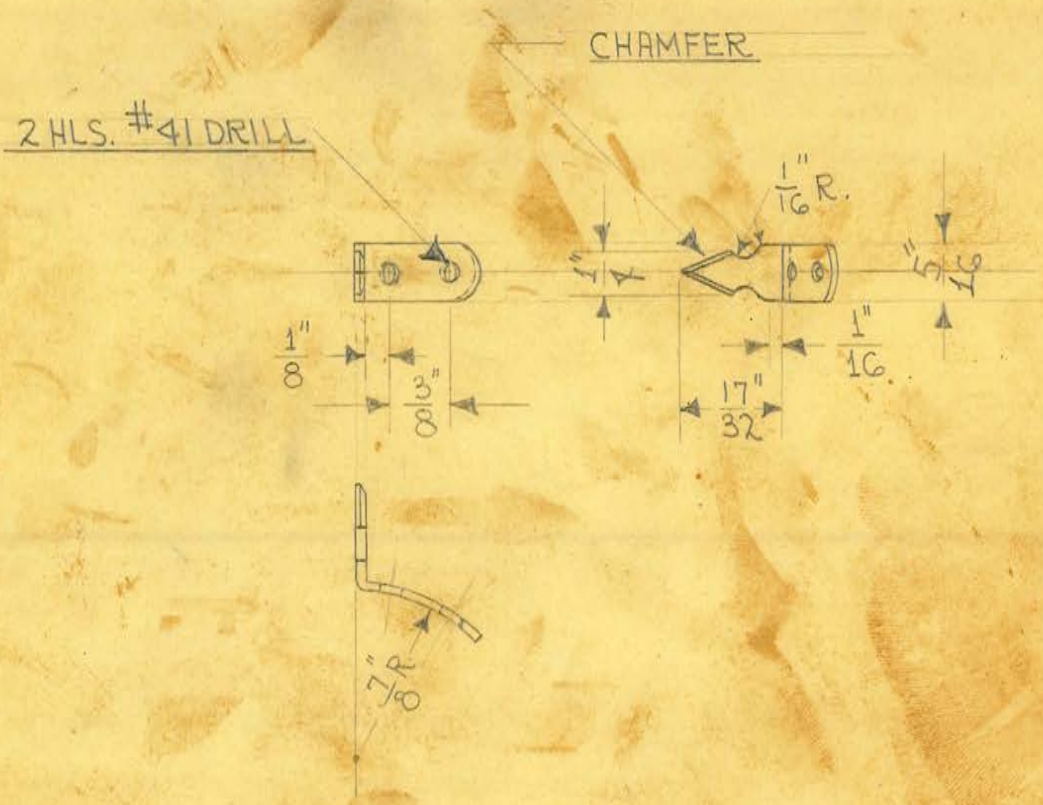


1 REQUIRED

OBSOLETE

| | | | |
|---|---|---|---|
| SIZE | #18GA. | ISSUE 8-9-35 | J.W. |
| KIND | SHEET BRASS | CHANGED | |
| SHAPE | | " | |
| FINISH | CHROME #2 | " | |
| TEMP. | | " | |
| PATT. | | " | |

**TITLE:** MOD. "SP-60." SHOCKPROOF RAD. UNIT ANGLE PLATE INDICATOR

H. G. FISCHER & CO.
2335 WABANSIA AVE.
CHICAGO, ILL.

CAT. NO.

PART NO. 9755F

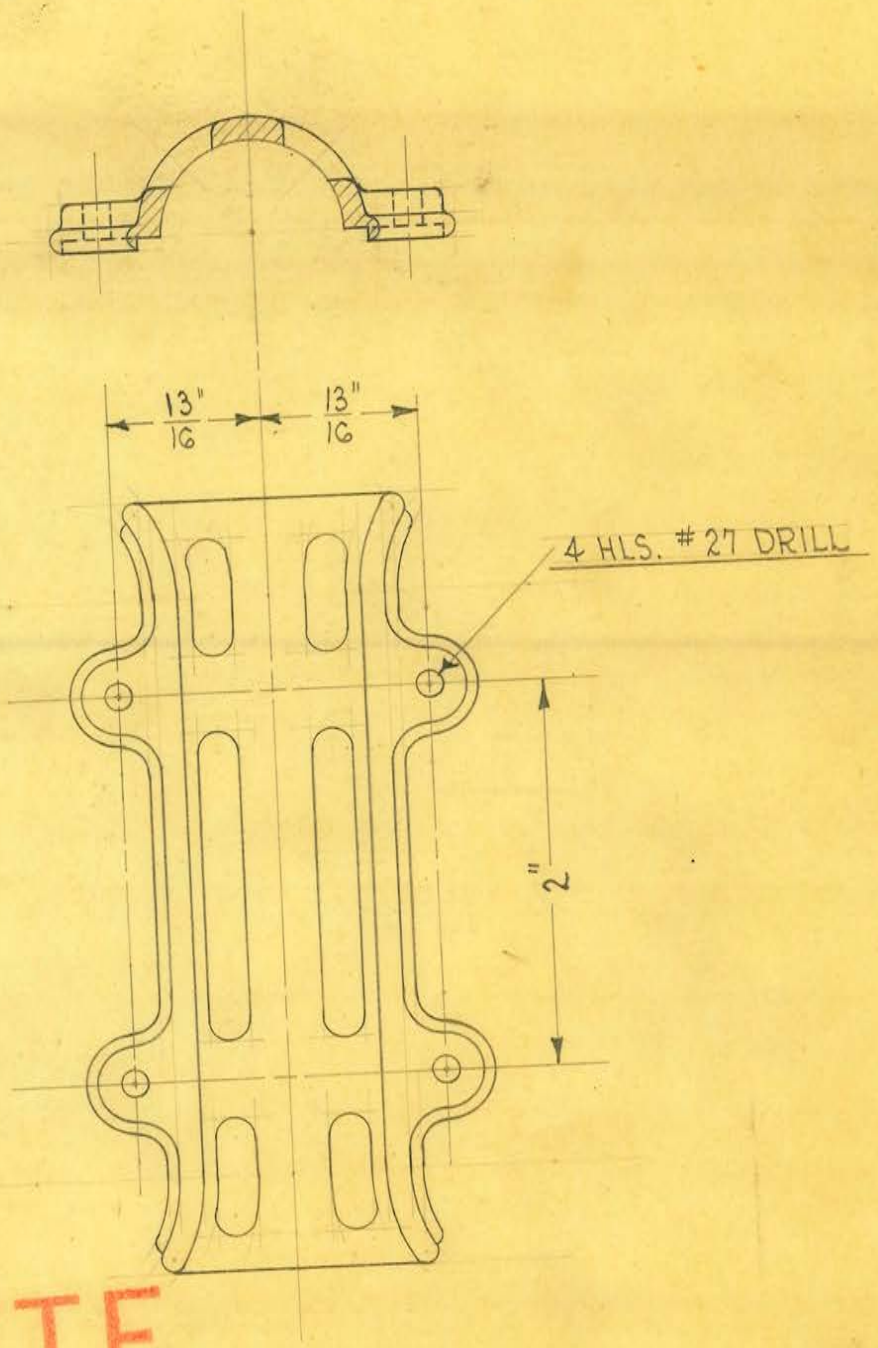


OBSOLETE

2 REQUIRED

| | | | |
|---|---|---|---|
| SIZE | | ISSUE 11-25-35 | A.E. |
| KIND | ALUM. CASTING | CHANGED | |
| SHAPE | | " | |
| FINISH | IVORY #52 | " | |
| TEMP. | | " | |
| PATT. | 3942-911 | " | |

**TITLE:** MODEL "SP-60" SHOCKPROOF RAD. UNIT
TUBE HEAD SWIVEL CABLE SUPPORT - UPPER

H. G. FISCHER & CO.
2335 WABANSIA AVE.
CHICAGO, ILL.

CAT. NO.

PART NO. 9755 1/2 F

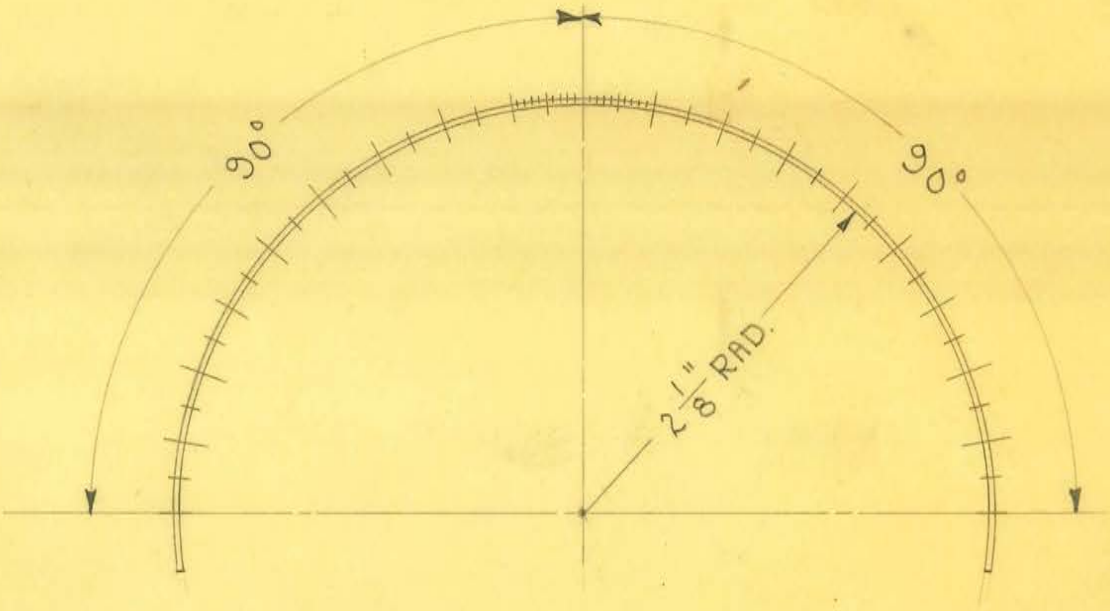


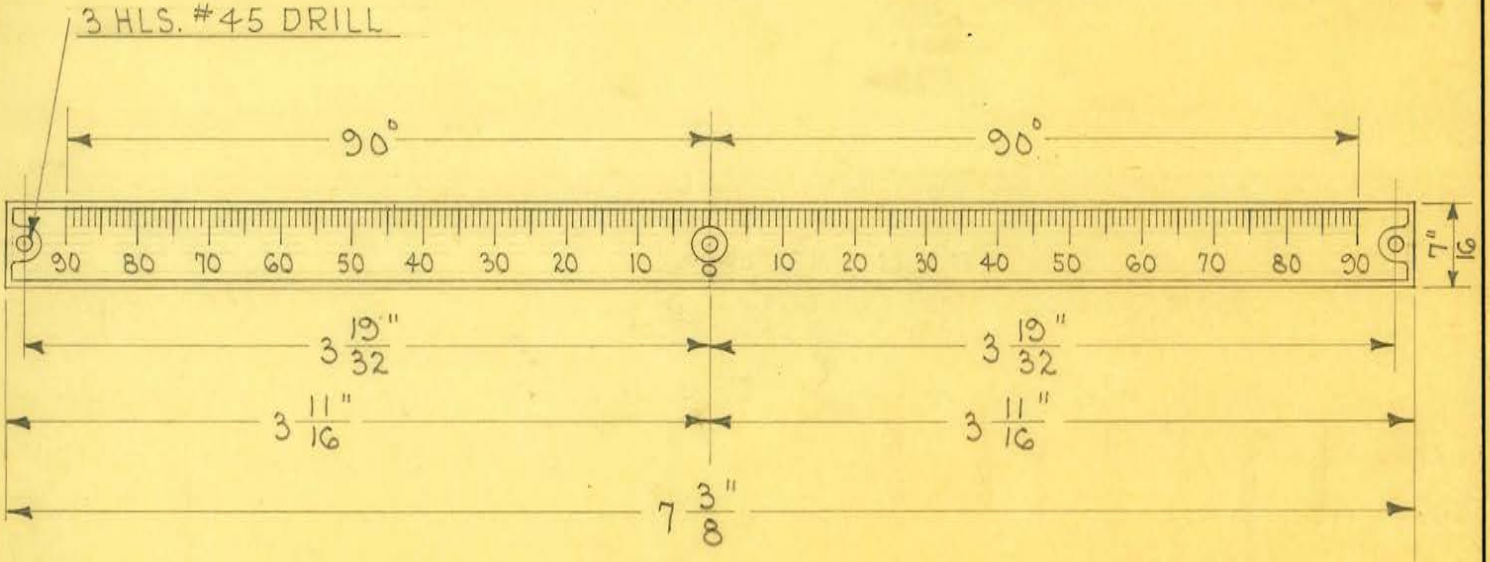


OBSOLETE

| | | | |
|---|---|---|---|
| SIZE | | ISSUE 4-30-37 | A.E. |
| KIND | | CHANGED | |
| SHAPE | | " | |
| FINISH | | " | |
| TEMP. | | " | |
| PATT. | | " | |

**TITLE:** MODEL "SP-60" SHOCKPROOF RAD UNIT
TUBE HEAD ANGLE PLATE

H. G. FISCHER & CO.
2335 WABANSIA AVE.
CHICAGO, ILL.

CAT. NO.

PART NO. 9756 1/4

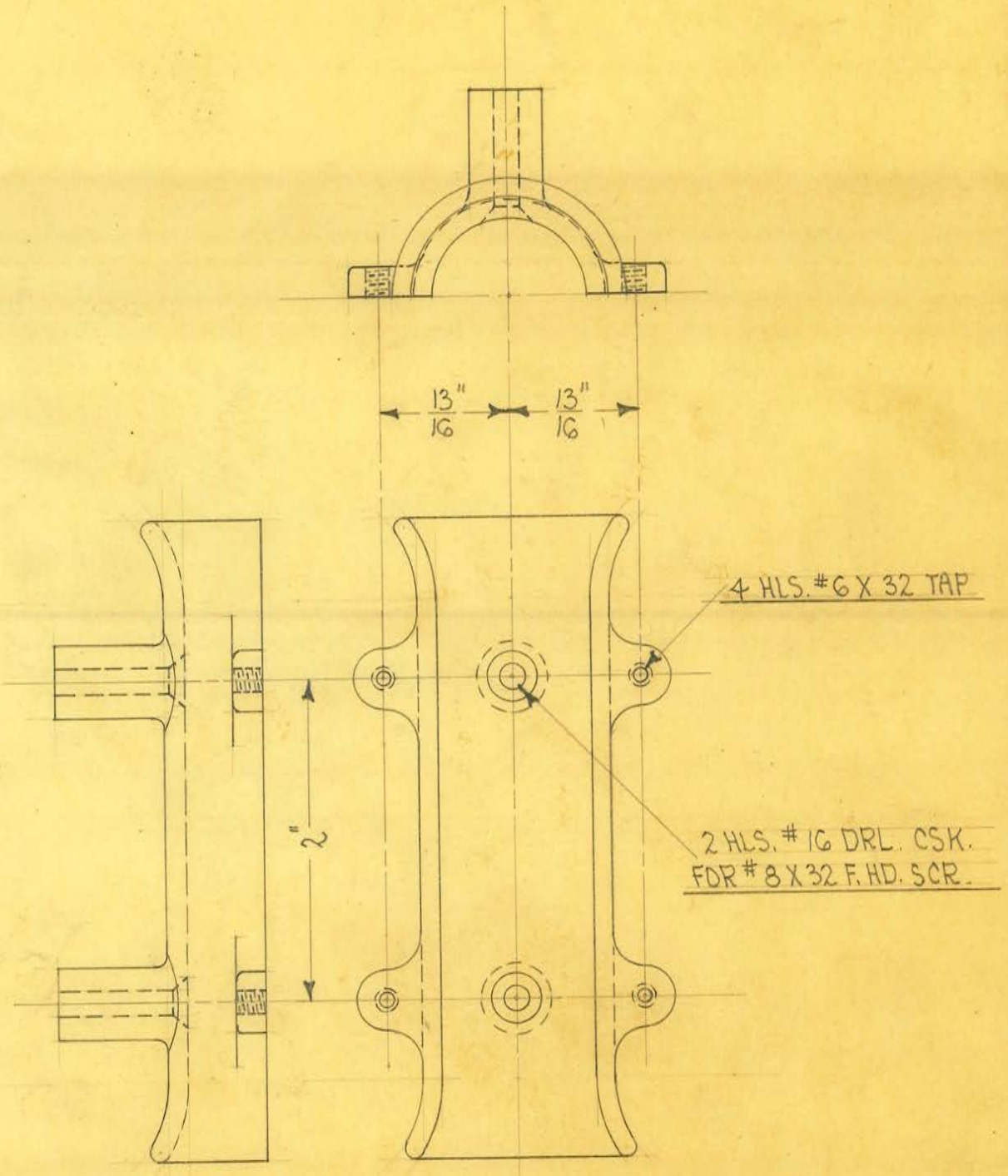


2 REQUIRED

OBSOLETE

| | | | | |
|---|---|---|---|---|
| SIZE | | ISSUE 11-25-35 | JE | TITLE: MODEL "SP-60" SHOCKPROOF RAD. UNIT TUBE HEAD SWIVEL CABLE SUPPORT-LOWER |
| KIND | ALUM. CASTING | CHANGED | | |
| SHAPE | | " | | |
| FINISH | IVORY #52 | " | | |
| TEMP. | | " | | |
| PATT. | 3943-912 | " | | |

H. G. FISCHER & CO.
2335 WABANSIA AVE.
CHICAGO, ILL.

CAT. NO.

PART NO. 9756 1/2 F

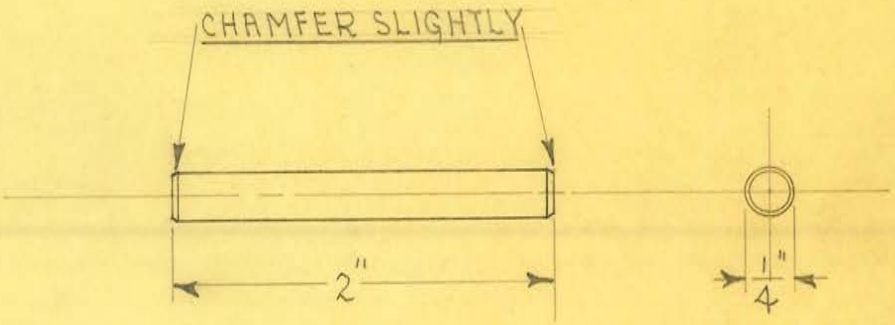


1 REQUIRED

OBSOLETE

| | | | |
|---|---|---|---|
| SIZE | ¼" DIAM. | ISSUE 11-25-35 | J.E. |
| KIND | C.R. STEEL | CHANGED | |
| SHAPE | | " | |
| FINISH | CAD. #23 | " | |
| TEMP. | | " | |
| PATT. | | " | |

**TITLE:** MODEL "SP-60" SHOCKPROOF RAD. UNIT
TUBE HEAD STOP PIN

H. G. FISCHER & CO.
2335 WABANSIA AVE.
CHICAGO, ILL.

CAT. NO.

PART NO. 9757

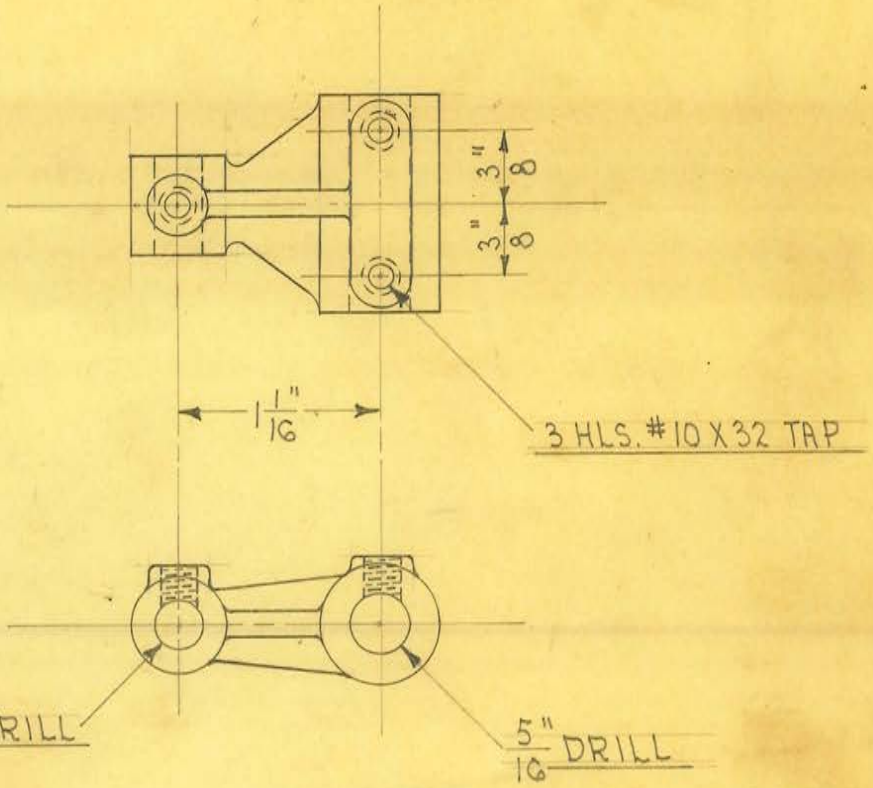


1 REQUIRED

OBSOLETE

| | | | |
|---|---|---|---|
| SIZE | | ISSUE 11-25-35 | A.E. |
| KIND | ALUM. CASTING | CHANGED | |
| SHAPE | | " | |
| FINISH | IVORY #52 | " | |
| TEMP. | | " | |
| PATT. | 3941-910 | " | |

**TITLE:** MODEL "SP-60" SHOCKPROOF RAD. UNIT
TUBE HEAD STOP

H. G. FISCHER & CO.
2335 WABANSIA AVE.
CHICAGO, ILL.

CAT. NO.

PART NO. 9758F

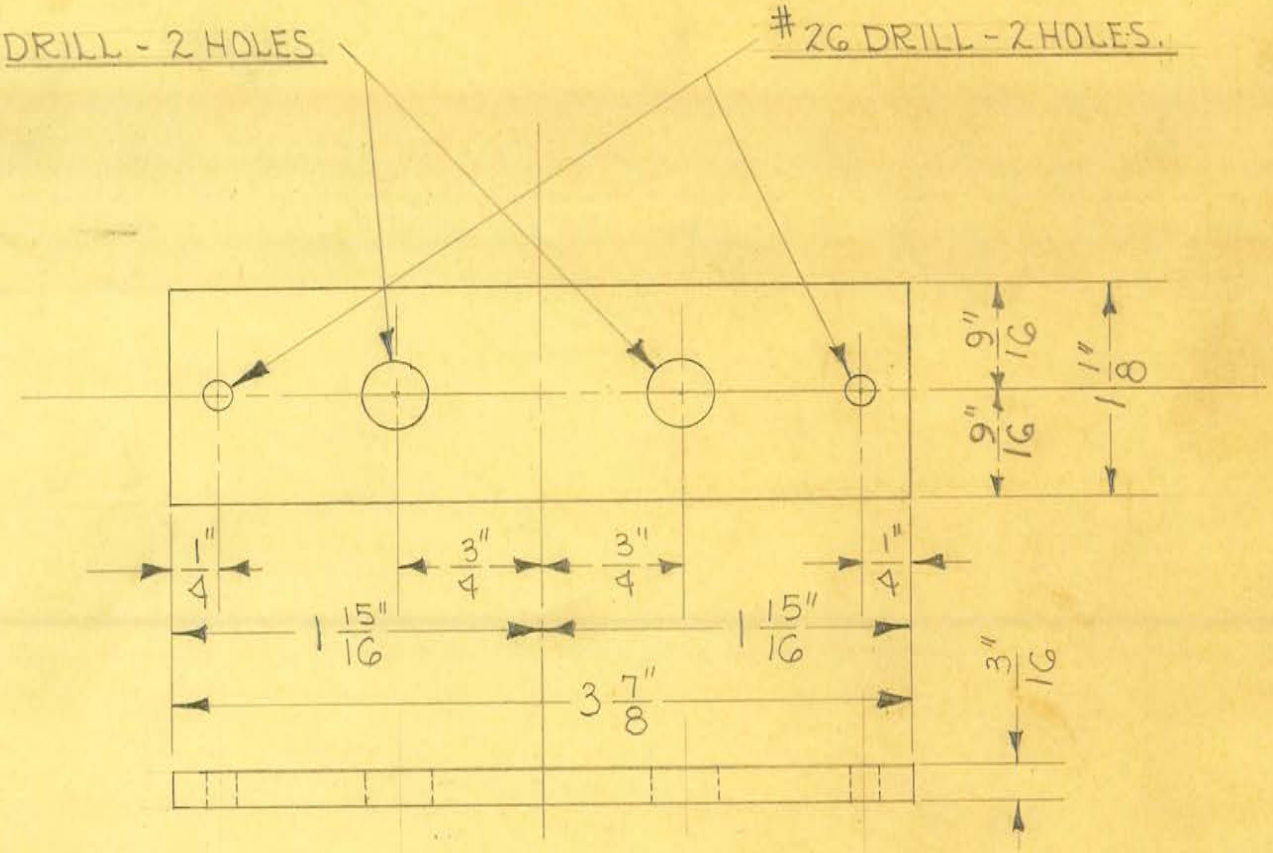


2 REQUIRED

OBSOLETE

| | | | | |
|---|---|---|---|---|
| SIZE | 3 7/8" X 1 1/8" X 3/16" | ISSUE 9-25-35 | J.W. | TITLE: FISCHER "SWD-C-12-1821" SHORT WAVE OSCILLATOR UNIT CONN. CORD SOCKET MTG. BOARD |
| KIND | ALSIMAG 35 | CHANGED | | |
| SHAPE | | " | | |
| FINISH | | " | | |
| TEMP. | | " | | |
| PATT. | | " | | |

H. G. FISCHER & CO.
2335 WABANSIA AVE.
CHICAGO, ILL.

CAT. NO.

PART NO. 9763

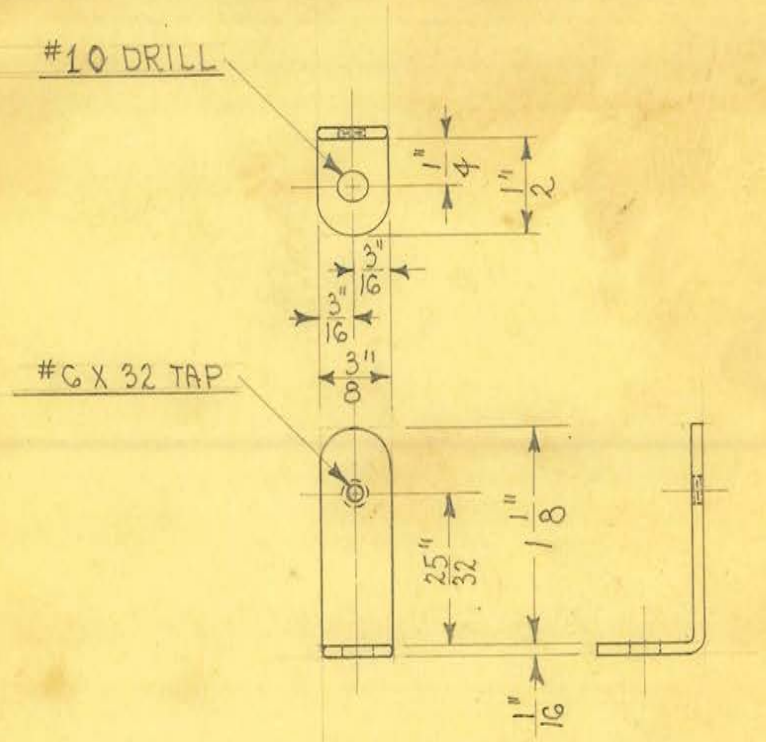


DEVELOPED LENGTH - 1 21" 32

4 REQUIRED

OBSOLETE

| | | | |
|---|---|---|---|
| SIZE | 3/8" X 1/16" | ISSUE 10-2-35 | A.E. |
| KIND | FLAT WIRE | CHANGED | |
| SHAPE | | " | |
| FINISH | DU-LITE #8 | " | |
| TEMP. | | " | |
| PATT. | | " | |

**TITLE:** FISCHER "SWD-6-12-18-24" SHORT WAVE OSCIL. UNIT CONN. CORD MTG. BOARD BRACKET

H. G. FISCHER & CO.
2335 WABANSIA AVE.
CHICAGO, ILL.

CAT. NO.

PART NO. 9764

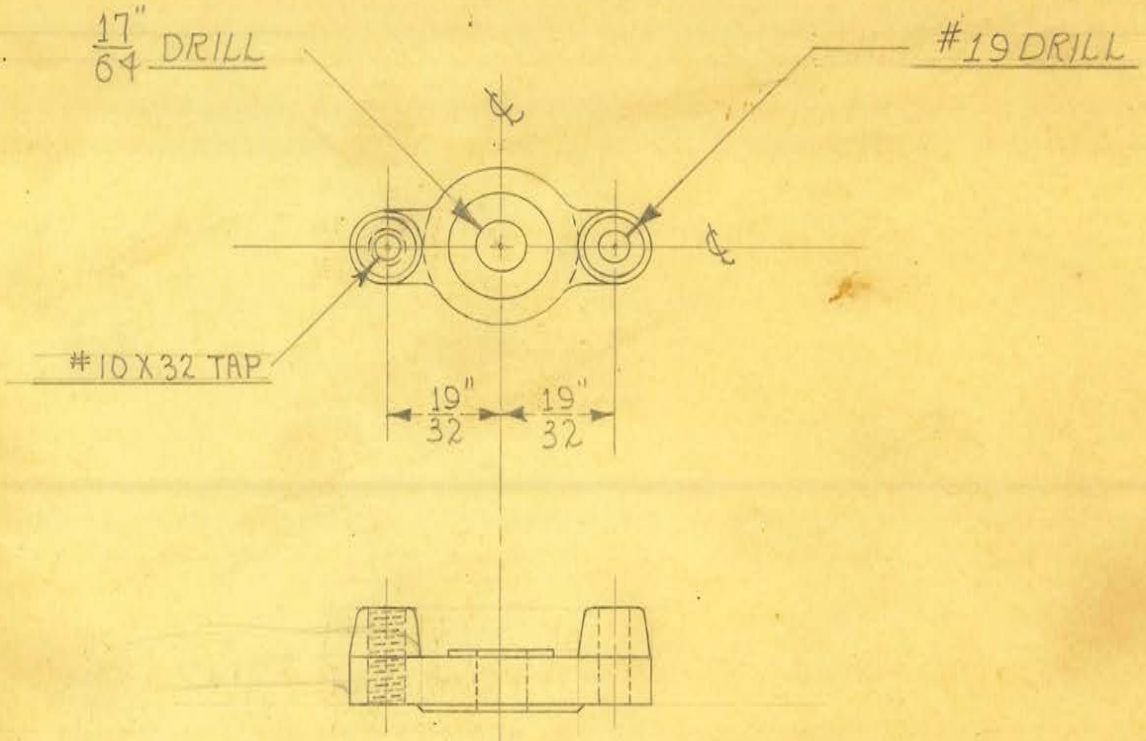


2 REQUIRED

OBSOLETE

| | | | | |
|---|---|---|---|---|
| SIZE | | ISSUE 10-14-35 | J.W. | TITLE: FISCHER "SWD-6-12-18-24" SHORT WAVE OSCIL. UNIT COIL & TUBE CONN. |
| KIND | | CHANGED | | |
| SHAPE | | " | | |
| FINISH | DIP #7 | " | | |
| TEMP. | | " | | |
| PATT. | 2636-884 | " | | |

H. G. FISCHER & CO.
2335 WABANSIA AVE.
CHICAGO, ILL.

CAT. NO.

PART NO. 9765F

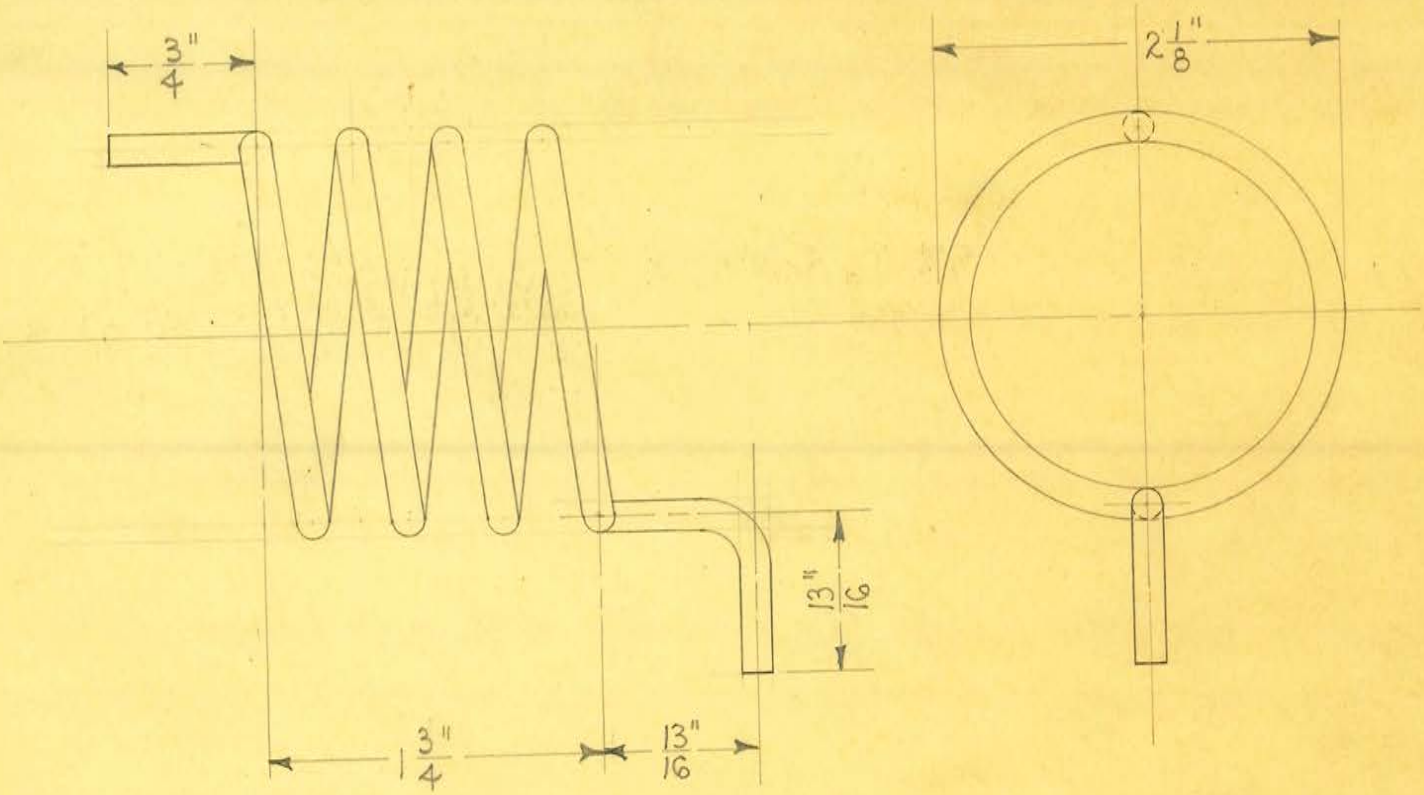


2 REQUIRED
3 1/2 TURNS

OBSOLETE

| | | | |
|---|---|---|---|
| SIZE | #6 BARE | ISSUE 10-25-35 | J.E. |
| KIND | COPPER WIRE | CHANGED | |
| SHAPE | | " | |
| FINISH | | " | |
| TEMP. | | " | |
| PATT. | | " | |

**TITLE:** FISCHER "SWD-6" SHORT WAVE OSCILLATOR
UNIT OSCILLATING COIL

H. G. FISCHER & CO.
2335 WABANSIA AVE.
CHICAGO, ILL.

CAT. NO.

PART NO. 9767

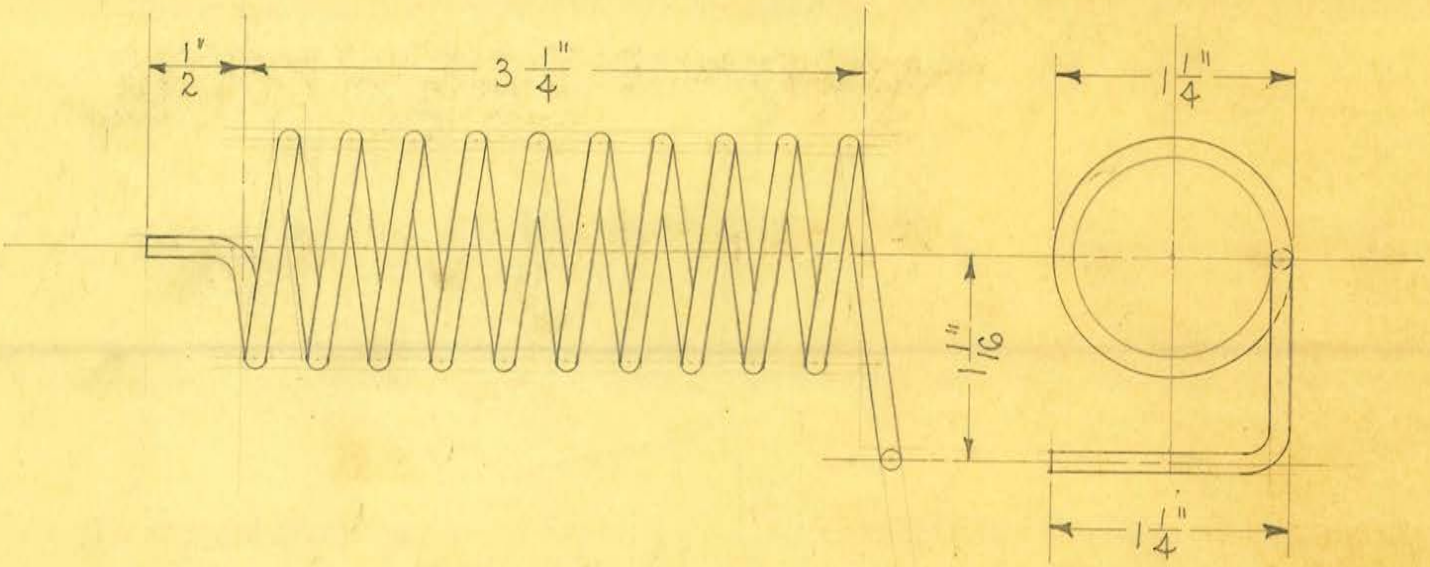


1 REQUIRED

10 TURNS

OBSOLETE

| | | | |
|---|---|---|---|
| SIZE | #10 TINNED | ISSUE 10-25-35 | A.E. |
| KIND | COPPER WIRE | CHANGED | |
| SHAPE | | " | |
| FINISH | | " | |
| TEMP. | | " | |
| PATT. | | " | |

**TITLE:** FISCHER "SWD-6" SHORT WAVE OSCILLATOR UNIT PATIENT'S TUNING COIL - LEFT

H. G. FISCHER & CO.
2335 WABANSIA AVE.
CHICAGO, ILL.

CAT. NO.

PART NO. 9769

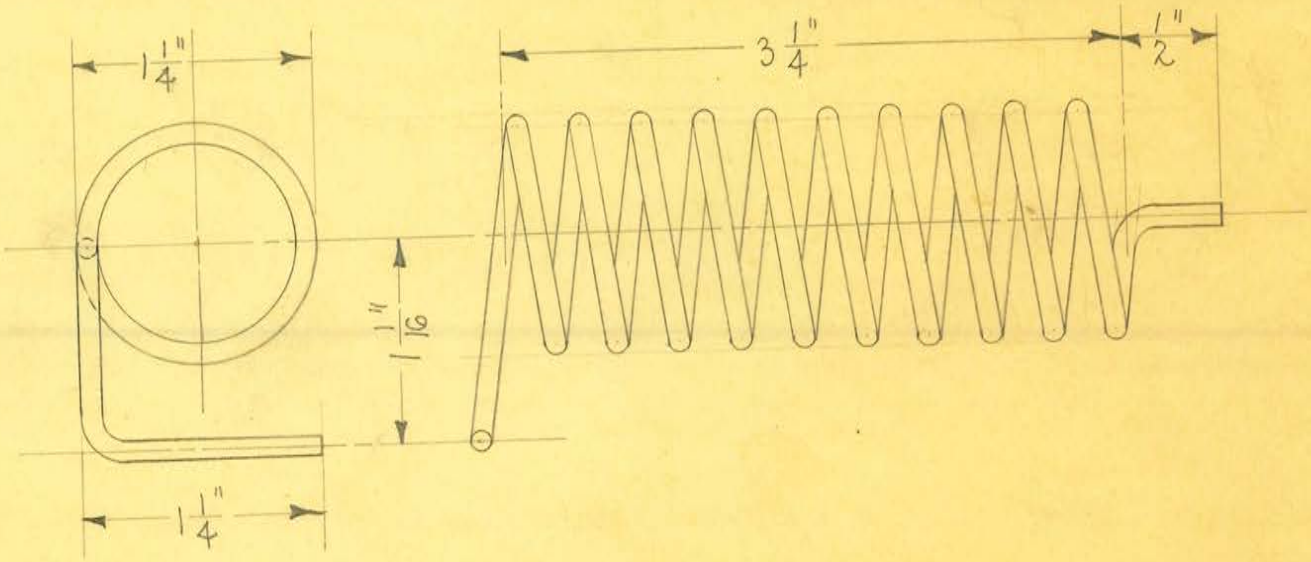


1 REQUIRED
10 TURNS

OBSOLETE

| | | | |
|---|---|---|---|
| SIZE | #10 TINNED | ISSUE 10-25-35 | H.E. |
| KIND | COPPER WIRE | CHANGED | |
| SHAPE | | " | |
| FINISH | | " | |
| TEMP. | | " | |
| PATT. | | " | |

**TITLE:** FISCHER "SWD-6" SHORT WAVE OSCILLATOR UNIT PATIENT'S TUNING COIL - RIGHT

H. G. FISCHER & CO.
2335 WABANSIA AVE.
CHICAGO, ILL.

CAT. NO.

PART NO. 9769 1/2

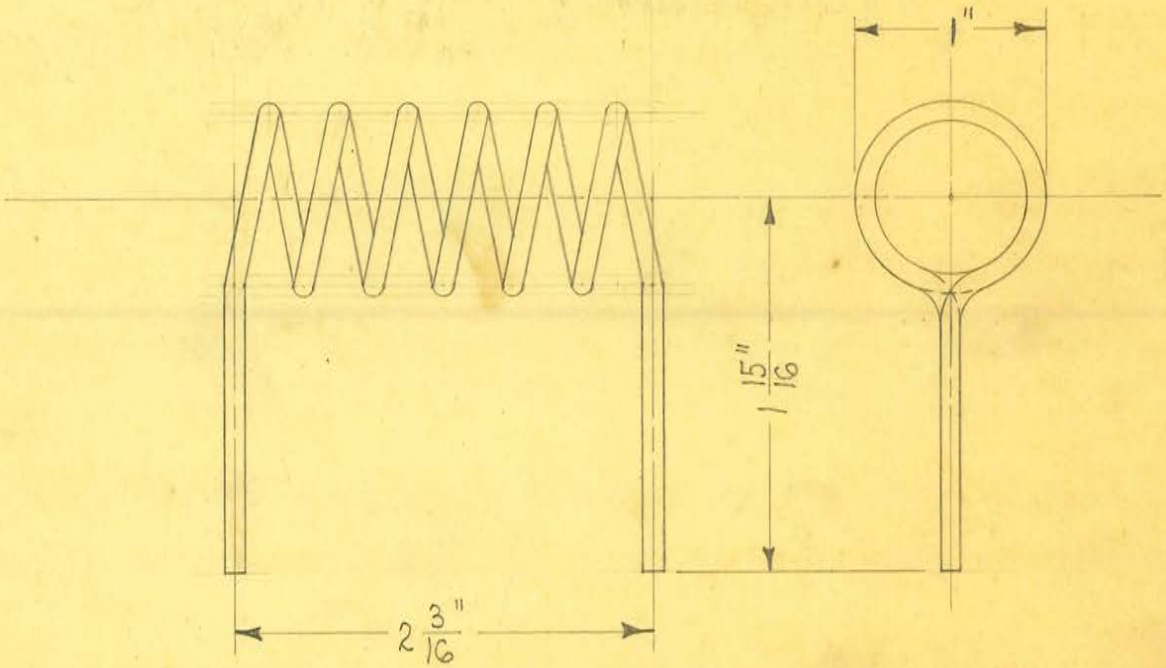


1 REQUIRED

6 TURNS

OBSOLETE

| | | | |
|---|---|---|---|
| SIZE | #10 TINNED | ISSUE 10-25-35 | A.E. |
| KIND | COPPER WIRE | CHANGED | |
| SHAPE | | " | |
| FINISH | | " | |
| TEMP. | | " | |
| PATT. | | " | |

**TITLE:** FISCHER "SWD-6" SHORT WAVE OSCILLATOR UNIT GRID COIL

H. G. FISCHER & CO.
2335 WABANSIA AVE.
CHICAGO, ILL.

CAT. NO.

PART NO. 9770

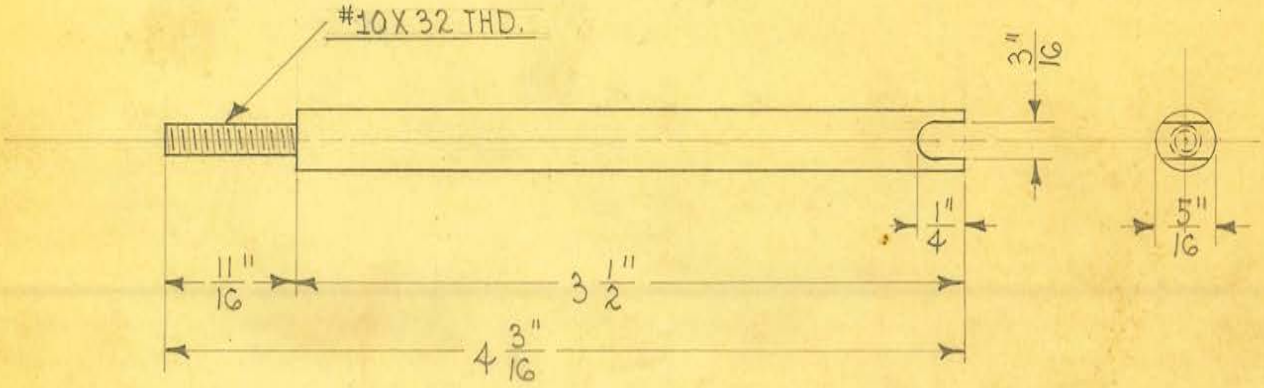


1 REQUIRED

OBSOLETE

| | | | |
|---|---|---|---|
| SIZE | 5/16" DIAM. | ISSUE 10-2-35 | A.E. |
| KIND | BRASS ROD | CHANGED | |
| SHAPE | | " | |
| FINISH | DIP #7 | " | |
| TEMP. | | " | |
| PATT. | | " | |

**TITLE:** FISCHER "SWD-18-24" SHORT WAVE OSCILLATOR UNIT OSCILLATING COIL SUPPORT

H. G. FISCHER & CO.
2335 WABANSIA AVE.
CHICAGO, ILL.

CAT. NO.

PART NO. 9772

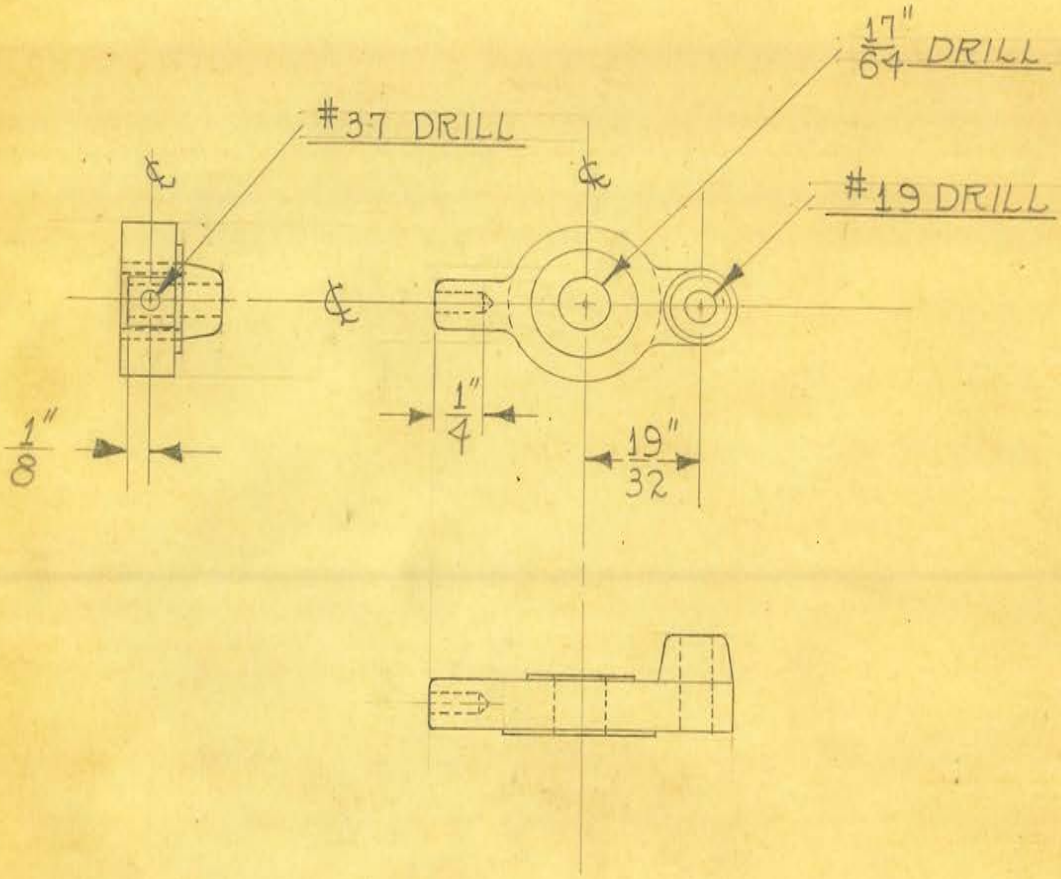


2-4-4 REQUIRED - RESPECT.

OBSOLETE

| | | | |
|---|---|---|---|
| SIZE | | ISSUE 10-14-35 J.W. | |
| KIND | | CHANGED | |
| SHAPE | | " | |
| FINISH | DIP #7 | " | |
| TEMP. | | " | |
| PATT. | 2637-885 | " | |

**TITLE:** FISCHER "SWD-6-18-24" SHORT WAVE OSCIL. UNIT COIL CONN.

| | | |
|---|---|---|
| H. G. FISCHER & CO. 2335 WABANSIA AVE. CHICAGO, ILL. | CAT. NO. | PART NO. 9773F |

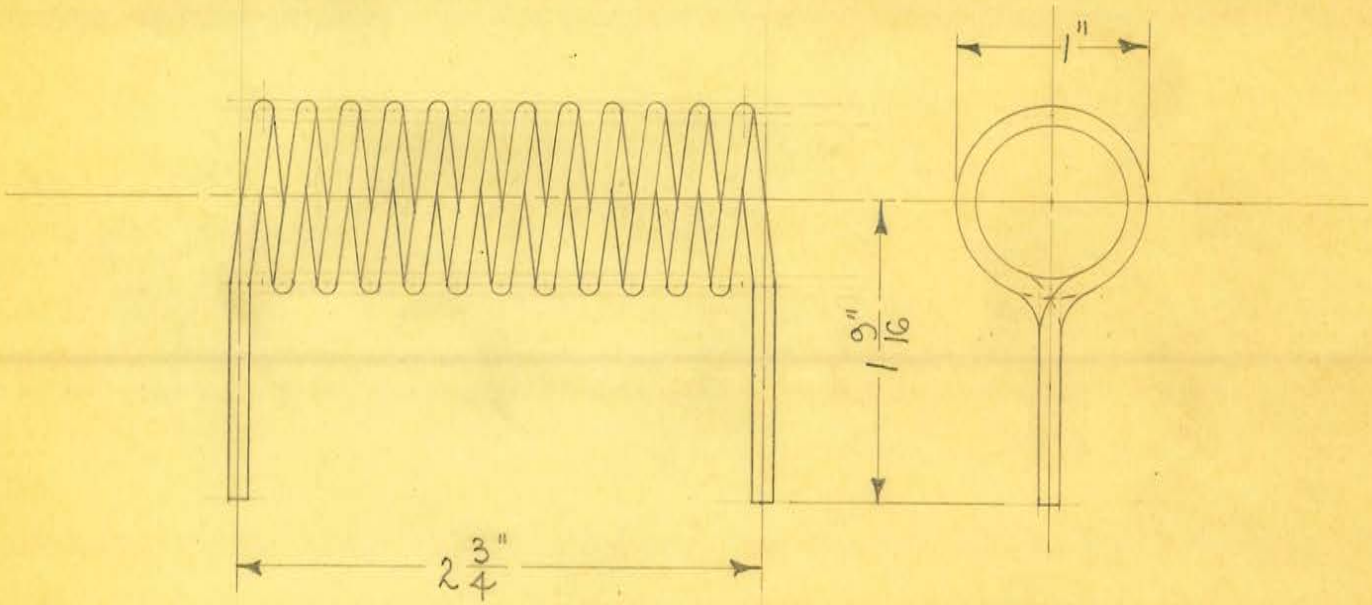


1 REQUIRED
12 TURNS

OBSOLETE

| | | | |
|---|---|---|---|
| SIZE | #10 TINNED | ISSUE 10-19-35 | A.E. |
| KIND | COPPER WIRE | CHANGED | |
| SHAPE | | " | |
| FINISH | | " | |
| TEMP. | | " | |
| PATT. | | " | |

**TITLE:** FISCHER "SWD-12" SHORT WAVE OSCILLATOR
UNIT GRID COIL

H. G. FISCHER & CO.
2335 WABANSIA AVE.
CHICAGO, ILL.

CAT. NO.

PART NO. 9774

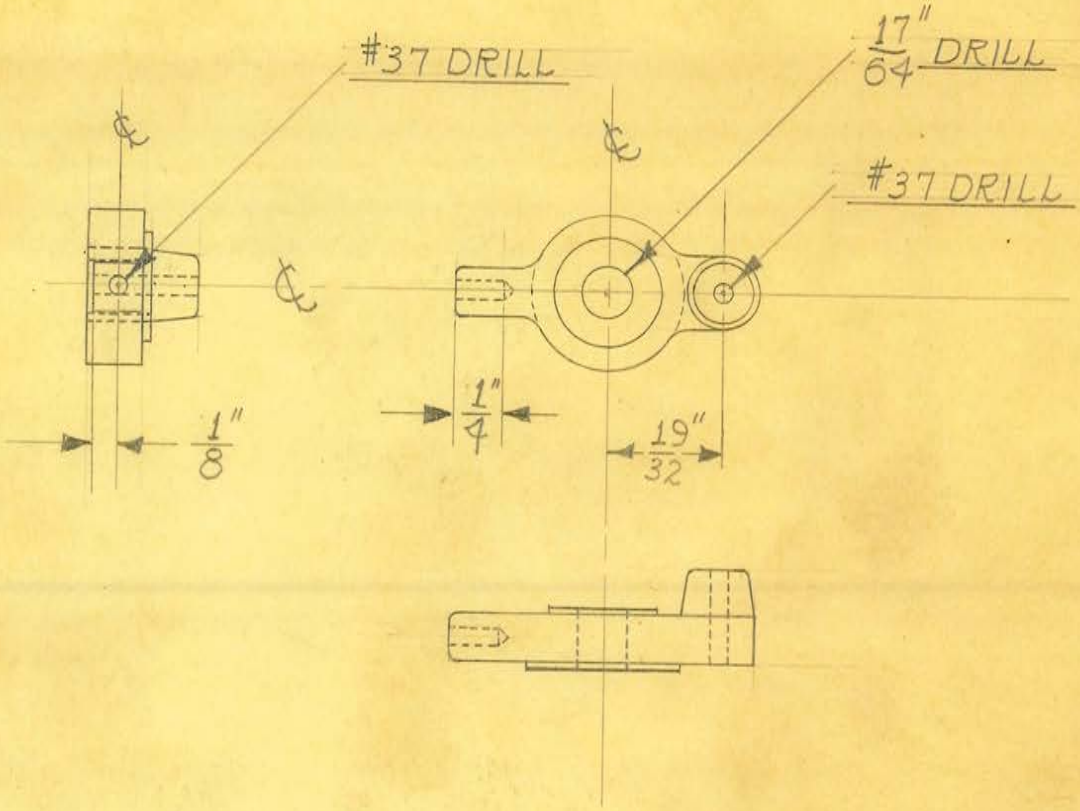


4 REQUIRED

OBSOLETE

| | | | | |
|---|---|---|---|---|
| SIZE | | ISSUE 10-14-35 | J.W. | TITLE: FISCHER "SWD-12" SHORT WAVE OSCIL. UNIT COIL CONN. (SMALL HLS.) |
| KIND | | CHANGED | | |
| SHAPE | | " | | |
| FINISH | DIP #7 | " | | |
| TEMP. | | " | | |
| PATT. | 2637-885 | " | | |

H. G. FISCHER & CO.
2335 WABANSIA AVE.
CHICAGO, ILL.

CAT. NO.

PART NO. 9777

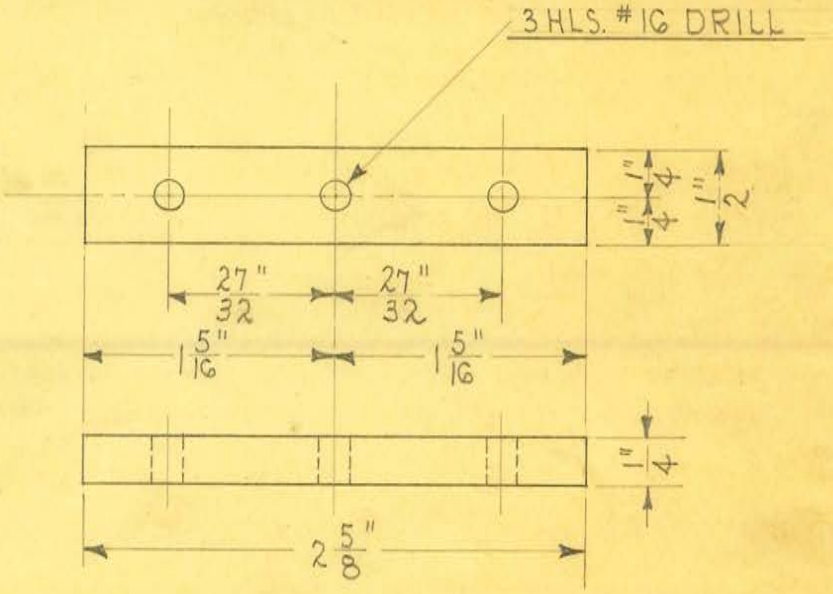


1 REQUIRED

OBSOLETE

| | | | |
|---|---|---|---|
| SIZE | 1/4" RICHELAIN | ISSUE 10-2-35 | A.E. |
| KIND | SHEET BAKELITE | CHANGED | |
| SHAPE | | " | |
| FINISH | | " | |
| TEMP. | | " | |
| PATT. | | " | |

**TITLE:** FISCHER "SWD-18-24" SHORT WAVE OSCILLATOR UNIT OSCILLATING COIL SUPP. MTG. BOARD

| | | |
|---|---|---|
| H. G. FISCHER & CO. 2335 WABANSIA AVE. CHICAGO, ILL. | CAT. NO. | PART NO. 9781 |

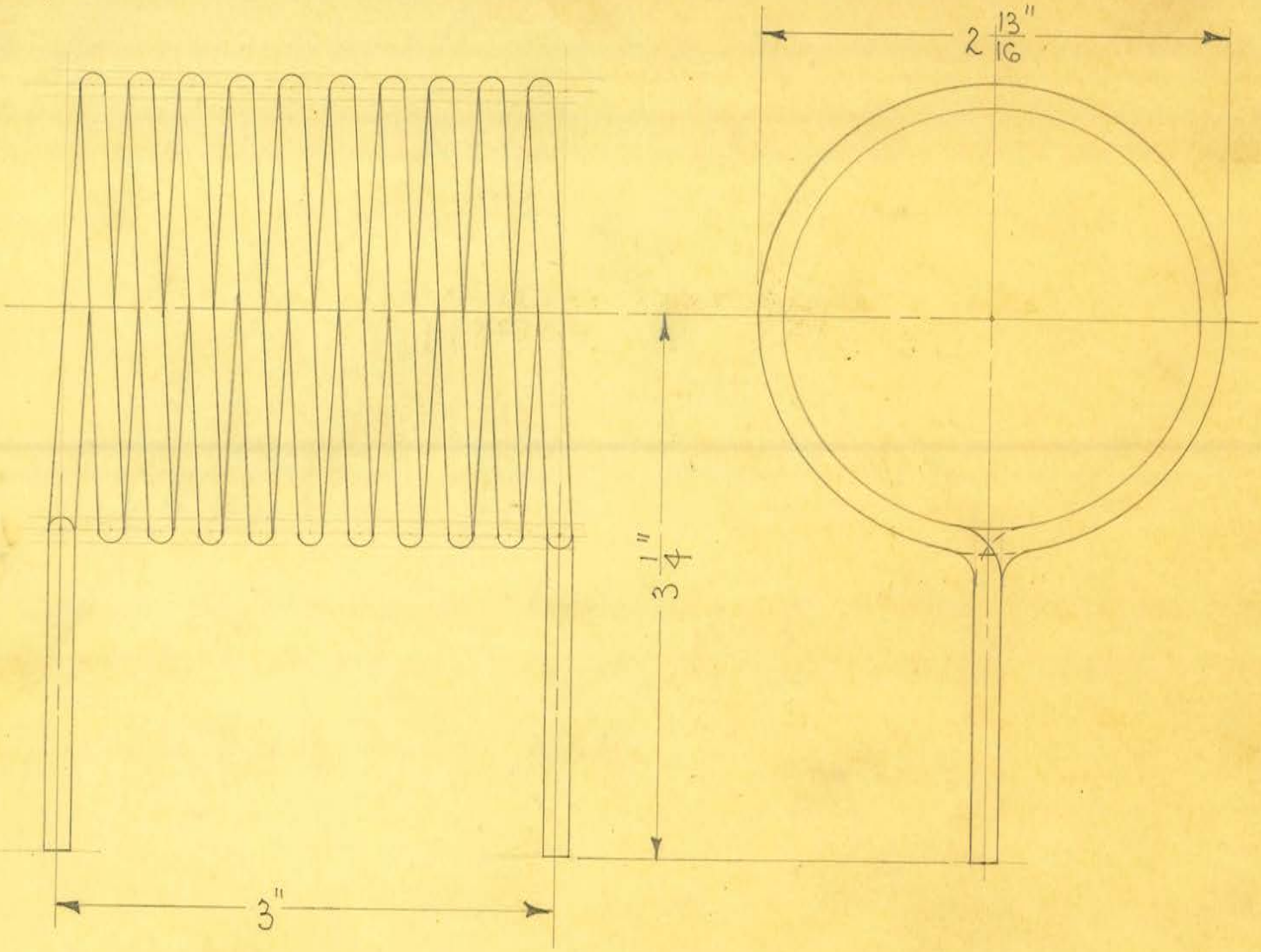


OBSOLETE

2 REQUIRED
10 TURNS

| | | | |
|---|---|---|---|
| SIZE | #6 BARE | ISSUE 10-29-35 | J.E. |
| KIND | COPPER WIRE | CHANGED | |
| SHAPE | | " | |
| FINISH | | " | |
| TEMP. | | " | |
| PATT. | | " | |

**TITLE:**
FISCHER "SWD-24" SHORT WAVE OSCILLATOR UNIT
PICKUP COIL

| | | |
|---|---|---|
| H. G. FISCHER & CO.<br>2335 WABANSIA AVE.<br>CHICAGO, ILL. | CAT. NO. | PART NO. 9783 |

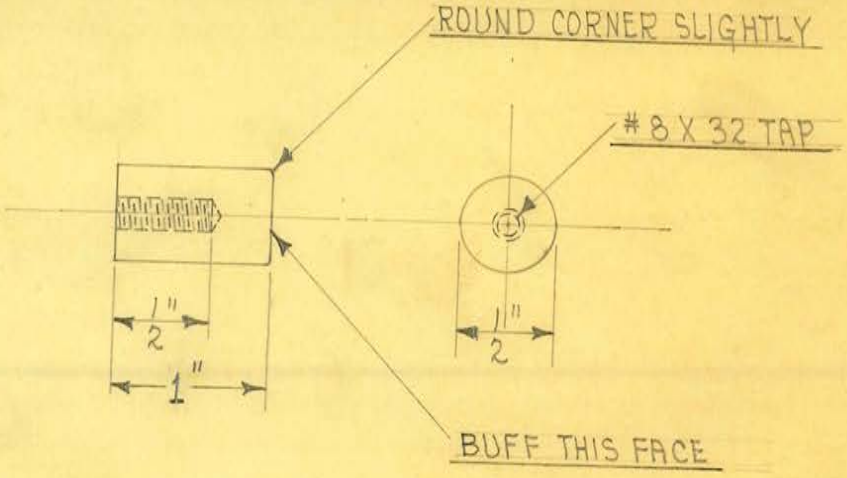


OBSOLETE

obsolete

| | | | |
|---|---|---|---|
| SIZE | 1/2" | ISSUE 11-6-35 | J.E. |
| KIND | BAKELITE ROD | CHANGED 2-26-36 | J.E. |
| SHAPE | | " | |
| FINISH | | " | |
| TEMP. | | " | |
| PATT. | | " | |

**TITLE:** FISCHER "SWD-6-12-18-24" SHORT WAVE OSCIL. UNIT METER INDICATOR - BLANK

H. G. FISCHER & CO.
2335 WABANSIA AVE.
CHICAGO, ILL.

CAT. NO.

PART NO. 9790A

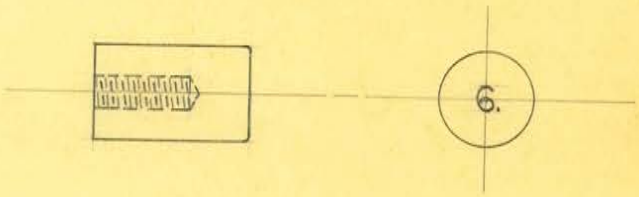


1 REQUIRED
FROM 9790A

OBSOLETE

obsolete

| | | | | |
|---|---|---|---|---|
| SIZE | | ISSUE 11-6-35 | H.E. | TITLE: FISCHER "SWD-6" SHORT WAVE OSCIL. UNIT METER INDICATOR (ENGRAVED) |
| KIND | | CHANGED 2-26-36 | H.E. | |
| SHAPE | | " | | |
| FINISH | | " | | |
| TEMP. | | " | | |
| PATT. | | " | | |

H. G. FISCHER & CO.
2335 WABANSIA AVE.
CHICAGO, ILL.

CAT. NO.

PART NO. 9790AF

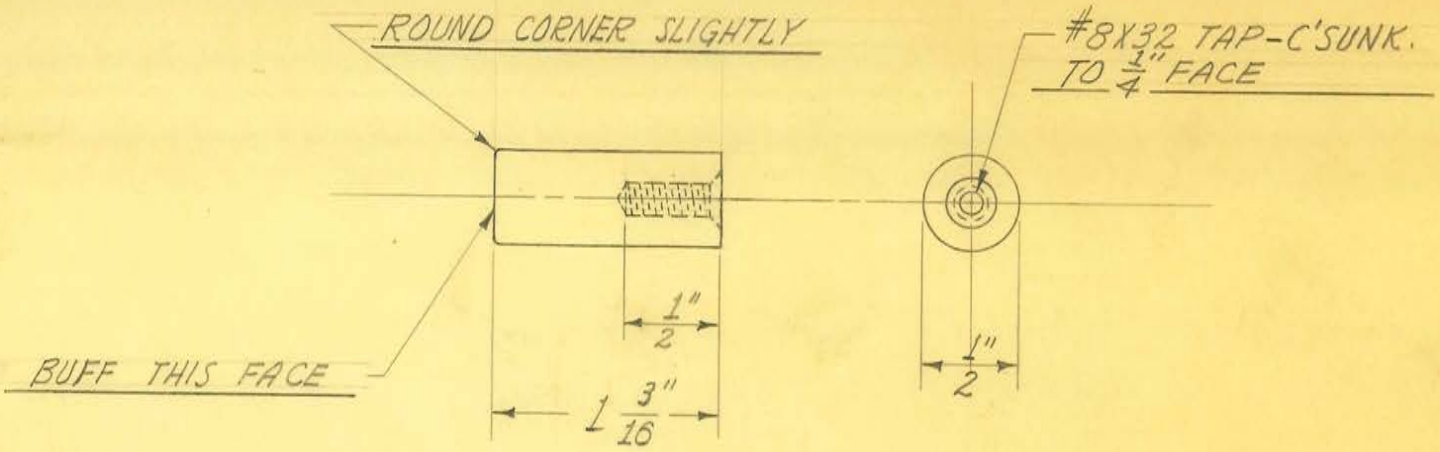


OBSOLETE

| | | | |
|---|---|---|---|
| SIZE | 1/2" DIA. | ISSUE 2-1-38 | J.W. |
| KIND | BAKELITE ROD | CHANGED | |
| SHAPE | | " | |
| FINISH | | " | |
| TEMP. | | " | |
| PATT. | | " | |

**TITLE:** FISCHER "SWDI" SHORT WAVE OSCIL. UNIT METER INDICATOR -BLANK

H. G. FISCHER & CO.
2335 WABANSIA AVE.
CHICAGO, ILL.

CAT. NO.

PART NO. 9790B

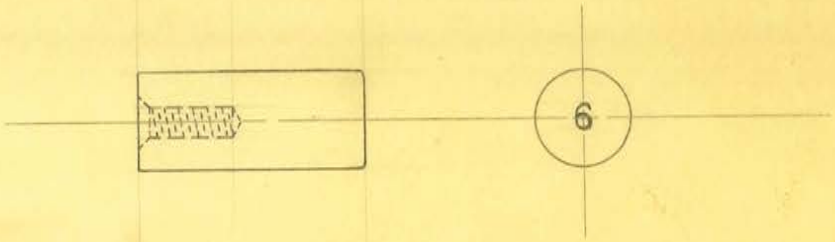


FROM #97908

1 REQUIRED

OBSOLETE

| | | | |
|---|---|---|---|
| SIZE | | ISSUE 2-1-38 | J.W. |
| KIND | | CHANGED | |
| SHAPE | | " | |
| FINISH | | " | |
| TEMP. | | " | |
| PATT. | | " | |

**TITLE:** FISCHER "SWD-6" SHORT WAVE OSCIL. UNIT METER INDICATOR (ENGRAVED)

H. G. FISCHER & CO.
2335 WABANSIA AVE.
CHICAGO, ILL.

CAT. NO.

PART NO. 9790BF

1 REQUIRED
FROM 9790A

OBSOLETE

obsolete

| | | | |
|---|---|---|---|
| SIZE | | ISSUE 11-6-35 | J.E. |
| KIND | | CHANGED 2-26-36 | J.E. |
| SHAPE | | " | |
| FINISH | | " | |
| TEMP. | | " | |
| PATT. | | " | |

**TITLE:** FISCHER" SWD-12" SHORT WAVE OSCIL. UNIT
METER INDICATOR

H. G. FISCHER & CO.
2335 WABANSIA AVE.
CHICAGO, ILL.

CAT. NO.

PART NO. 9791A

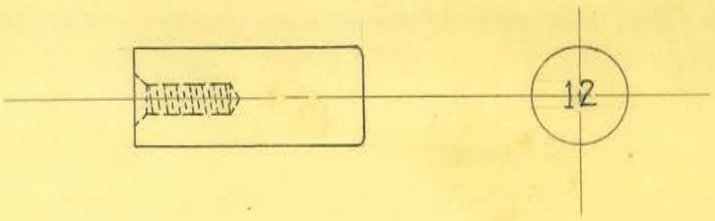


FROM # 9790B

1 REQUIRED

OBSOLETE

| | | | |
|---|---|---|---|
| SIZE | | ISSUE 2-1-38 | J.W. |
| KIND | | CHANGED | |
| SHAPE | | " | |
| FINISH | | " | |
| TEMP. | | " | |
| PATT. | | " | |

**TITLE:** FISCHER "SWDI-12" SHORT WAVE OSCIL. UNIT METER INDICATOR

H. G. FISCHER & CO.
2335 WABANSIA AVE.
CHICAGO, ILL.

CAT. NO.

PART NO. 9791B

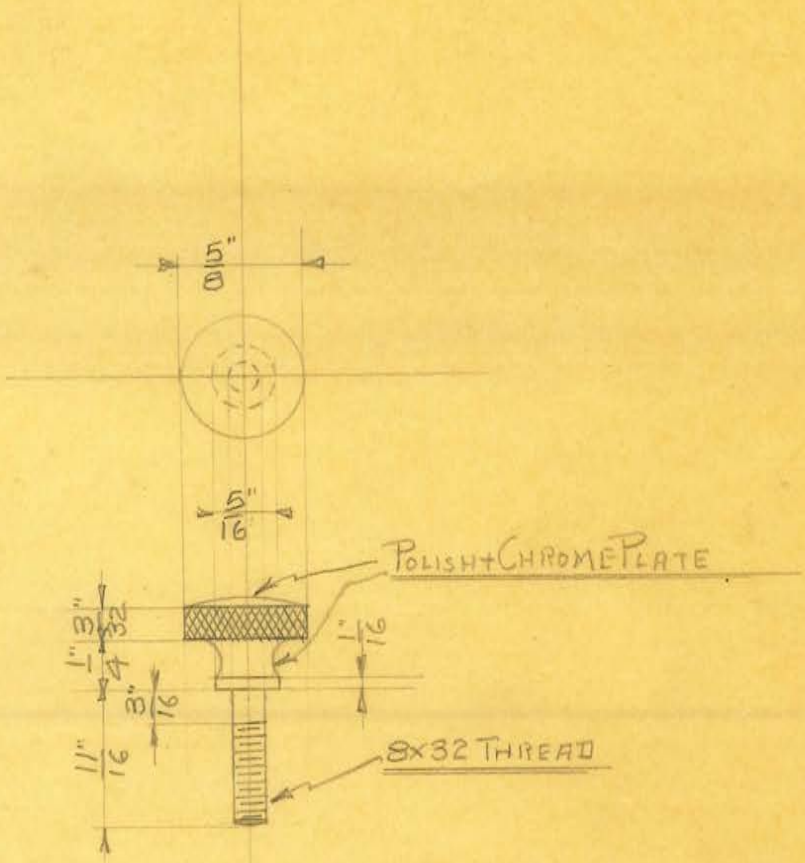


1 REQUIRED

OBSOLETE

| | | | | | |
|---|---|---|---|---|---|
| SIZE | 5/8" BRASS ROD | ISSUE | | TITLE: UNIVERSAL "GO-88" BUCKY LOCK LEVER CLAMP SCREW | |
| KIND | | CHANGED | | | |
| SHAPE | | " " | | | |
| FINISH | POLISH+CHROME | " " | | | |
| TEMP. | | " " | | H. G. FISCHER & CO. 2335 WABANSIA AVE. CHICAGO, ILL. | CAT. NO. |
| PATT. | | " " | | | PART NO. 8391 |

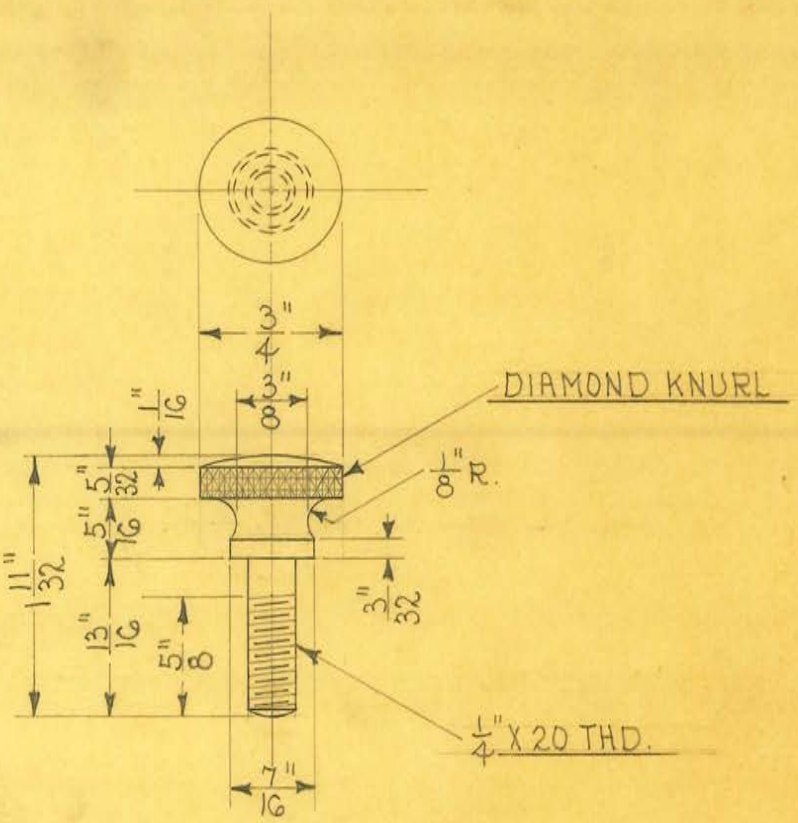


1 REQUIRED

OBSOLETE

| | | | | |
|---|---|---|---|---|
| SIZE | 3/4" | ISSUE 4-17-34 | A.E. | TITLE: UNIVERSAL "CO-88" BUCKY LOCK LEVER CLAMP SCREW |
| KIND | BRASS ROD | CHANGED | | |
| SHAPE | | " | | |
| FINISH | CAD. PLATE | " | | |
| TEMP. | | " | | |
| PATT. | | " | | |

H. G. FISCHER & CO.
2335 WABANSIA AVE.
CHICAGO, ILL.

CAT. NO.

PART NO. 8391A

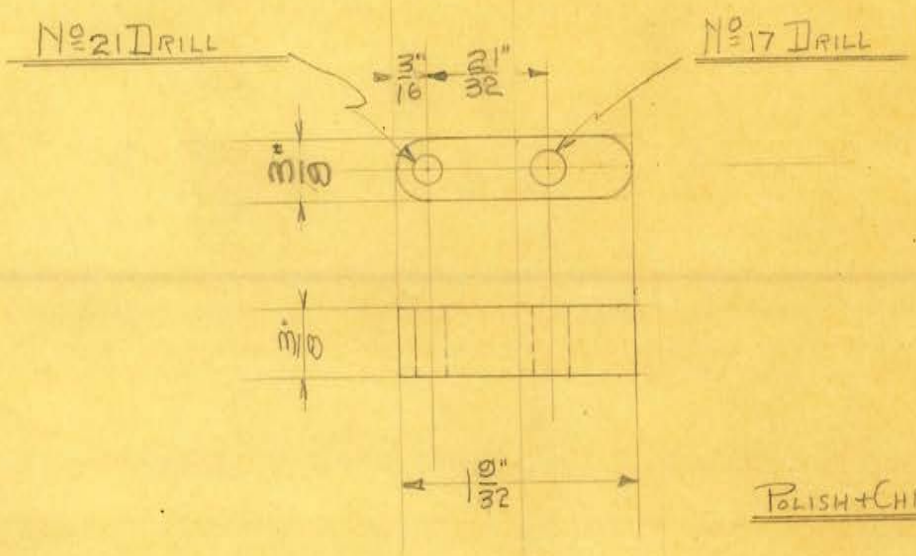


POLISH + CHROME PLATE ALL OVER

1 REQUIRED

OBSOLETE

| | | | |
|---|---|---|---|
| SIZE | 3" × 3" BRASS BAR | ISSUE | |
| KIND | | CHANGED | |
| SHAPE | | " " | |
| FINISH | POLISH + CHROME | " " | |
| TEMP. | | " " | |
| PATT. | | " " | |

**TITLE:** UNIVERSAL "60-88" BUCKY LOCK PIECE

H. G. FISCHER & CO.
2335 WABANSIA AVE.
CHICAGO, ILL.

CAT. NO.

PART NO. 8392

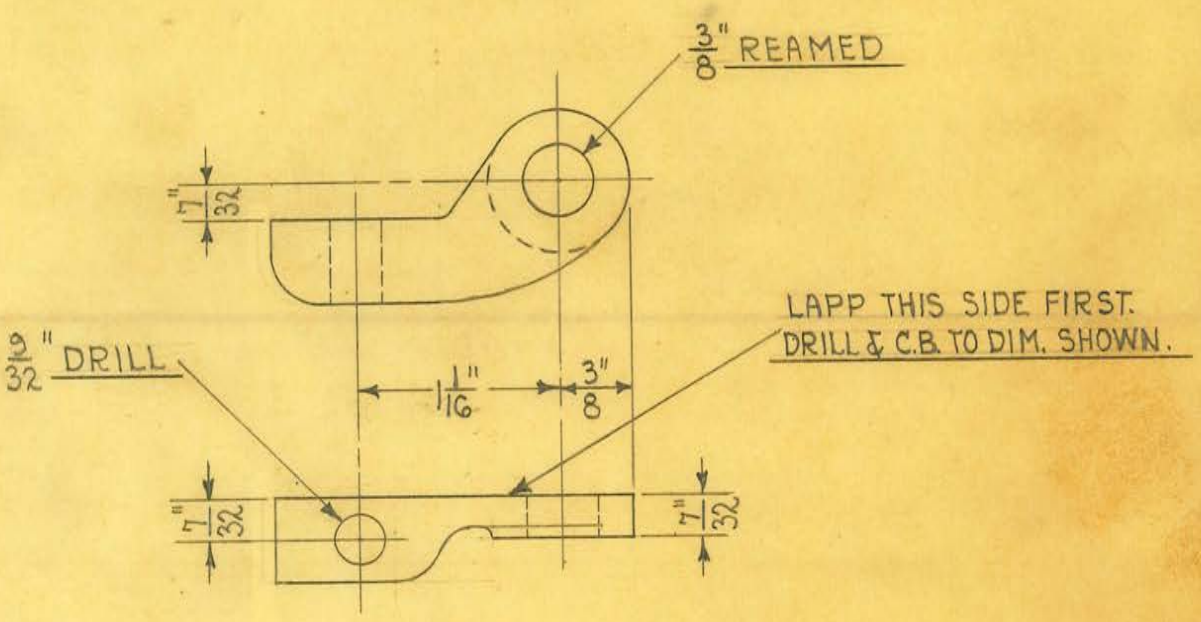


1-REQUIRED

OBSOLETE

obsolete
2-1-49

| | | | | |
|---|---|---|---|---|
| SIZE | | ISSUE 4-17-34 | A.E. | TITLE: UNIVERSAL "60-88" BUCKY LOCK PIECE |
| KIND | BRASS CASTING | CHANGED | | |
| SHAPE | | " | | |
| FINISH | CAD. PLATE | " | | |
| TEMP. | | " | | H. G. FISCHER & CO. 2335 WABANSIA AVE. CHICAGO, ILL. — CAT. NO. — PART NO. 8392AF |
| PATT. | 9174-731 | " | | |

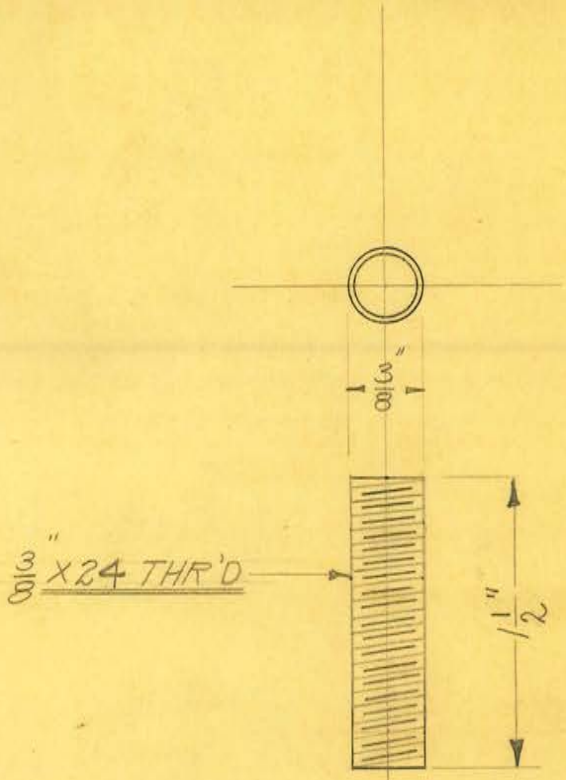


1 REQUIRED

OBSOLETE

| | | | | |
|---|---|---|---|---|
| SIZE | 3/8" ROD | ISSUE 10-30-33 | N.P. | TITLE: UNIVERSAL "60-88" TUBE STAND TUBE HOUSING BALL STUD |
| KIND | SCREW STK. | CHANGED 2-8-34 | H.G. | |
| SHAPE | | " | | |
| FINISH | | " | | |
| TEMP. | | " | | |
| PATT. | | " | | |

H. G. FISCHER & CO.
2335 WABANSIA AVE.
CHICAGO, ILL.

CAT. NO.

PART NO. 8393A

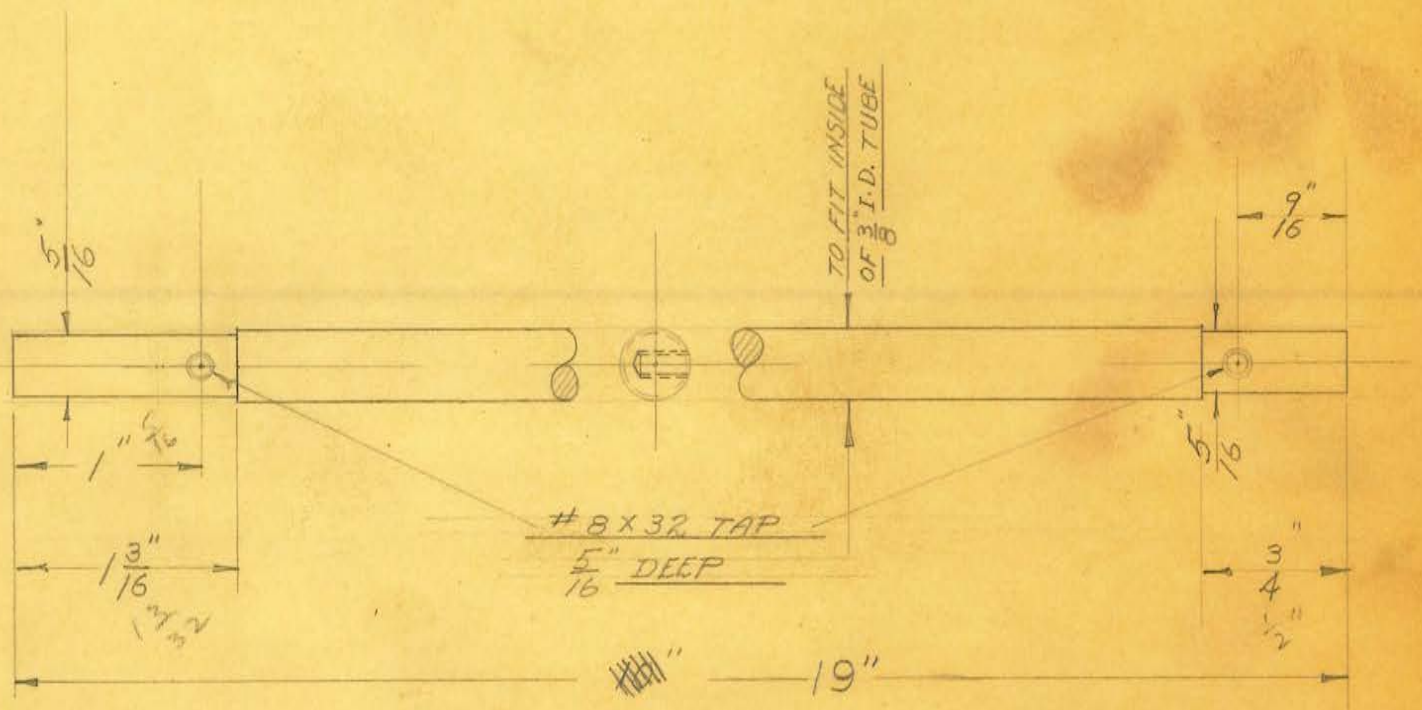


1 REQUIRED

OBSOLETE

| | | | | | |
|---|---|---|---|---|---|
| SIZE | 3/8" ROD | ISSUE 10-11-33 | N.P | TITLE: UNIVERSAL "60-88" SHUTTER OPERATING ROD | |
| KIND | D. ALUM. | CHANGED | | | |
| SHAPE | | " " 6-29-44 | J.Y.W. | | |
| FINISH | POLISH | " " | | | |
| TEMP. | | " " | | H. G. FISCHER & CO. 2335 WABANSIA AVE. CHICAGO, ILL. | CAT. NO. |
| PATT. | | " " | | | PART NO. 8398A |

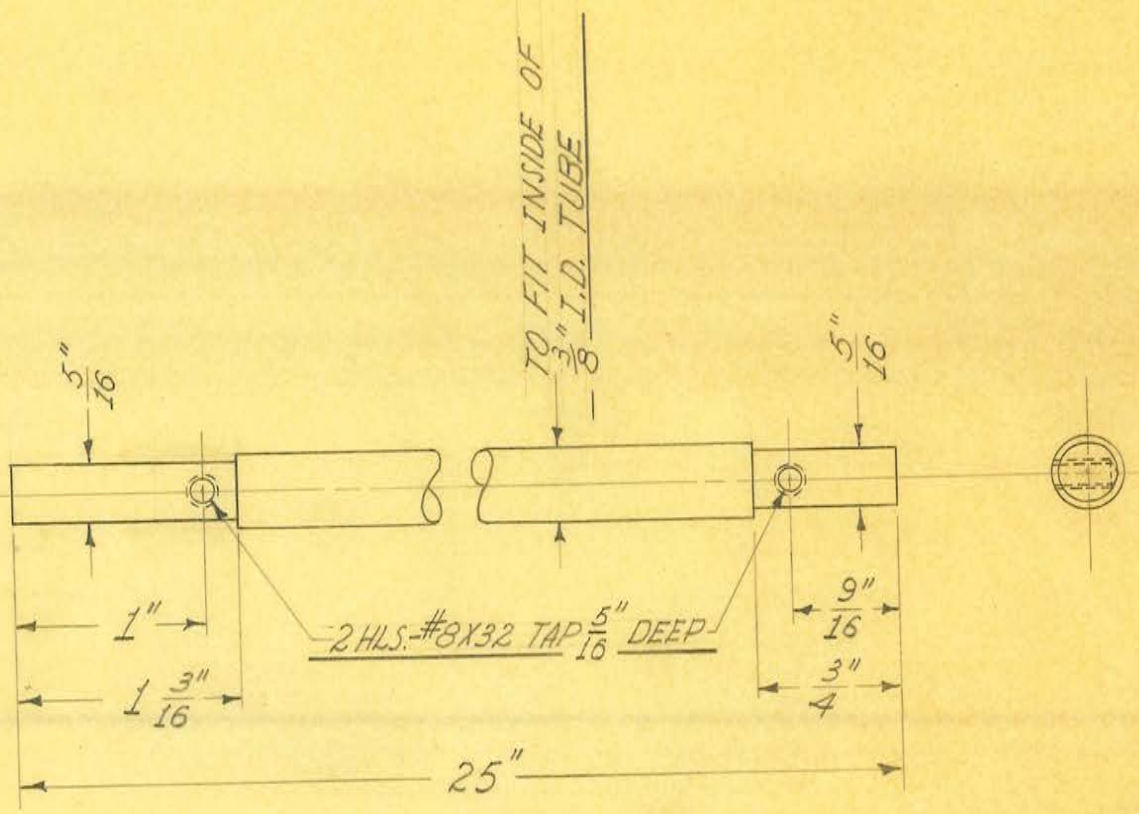


1 REQUIRED

OBSOLETE

| | | | | |
|---|---|---|---|---|
| SIZE | 3/8" DIAM. | ISSUE 9-10-37 | J.W. | TITLE: UNIVERSAL "60-88" SHUTTER OPERATING ROD (15" LONGER FOR SO. AMERICA - DIAZ & SUAREZ) |
| KIND | DURALUMINUM | CHANGED | | |
| SHAPE | ROD | " | | |
| FINISH | POLISH | " | | |
| TEMP. | | " | | |
| PATT. | | " | | |

H. G. FISCHER & CO.
2335 WABANSIA AVE.
CHICAGO, ILL.

CAT. NO.

PART NO. 8398 1/2

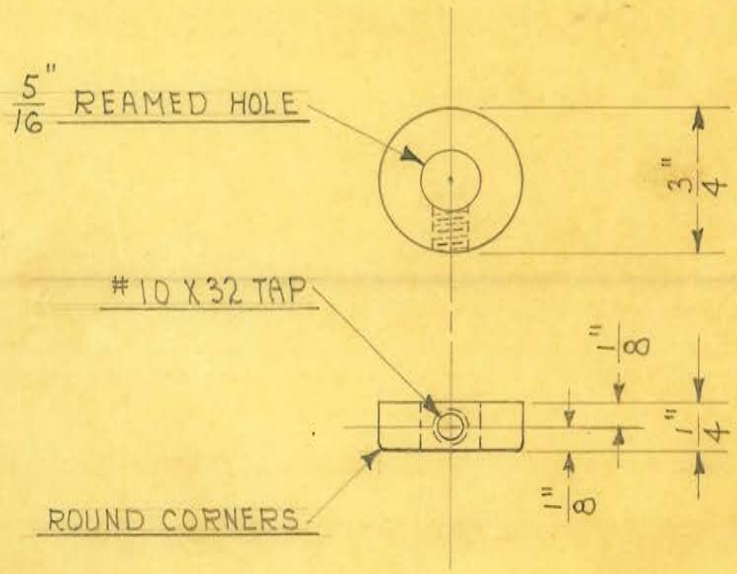


1 REQUIRED

OBSOLETE

| | | | | |
|---|---|---|---|---|
| SIZE | 3/4" ROD | ISSUE 5-19-36 | J.H.E. | **TITLE:** UNIVERSAL "60-88" SHUTTER OPERATING ROD COLLAR |
| KIND | ALUMINUM | CHANGED | | |
| SHAPE | | " | | |
| FINISH | POLISH | " | | |
| TEMP. | | " | | |
| PATT. | | " | | |

| | | |
|---|---|---|
| H. G. FISCHER & CO. 2335 WABANSIA AVE. CHICAGO, ILL. | CAT. NO. | PART NO. 8400A |

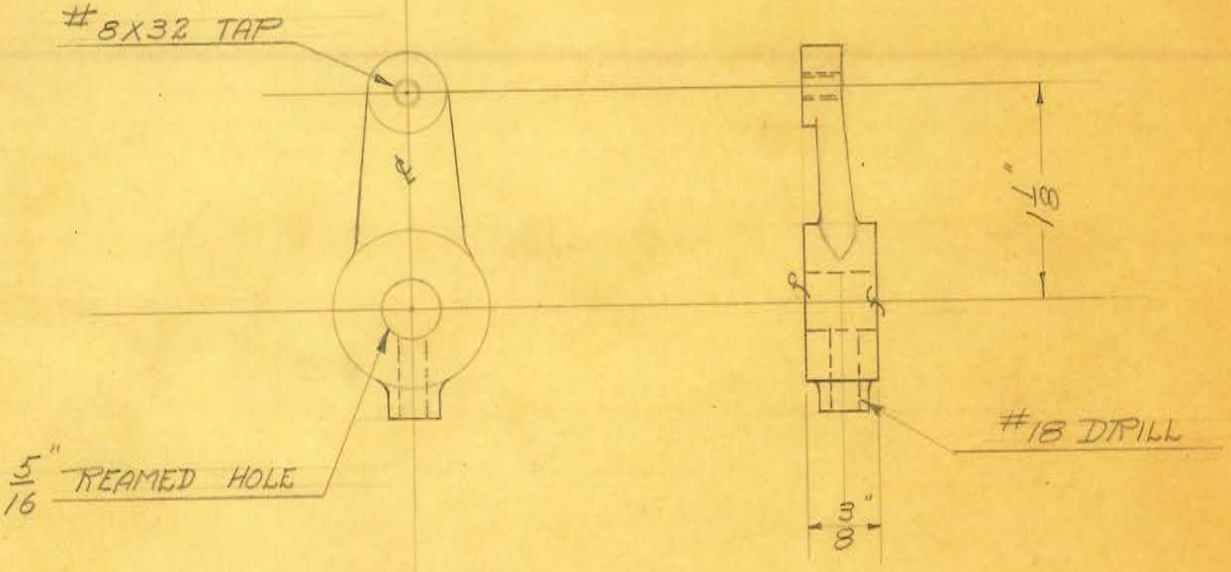


1 REQUIRED

OBSOLETE

JIG #3613

| | | | | |
|---|---|---|---|---|
| SIZE | | ISSUE 10-10-33 | N.P | TITLE: UNIVERSAL "60-88" SHUTTER OPERATING ROD LEVER |
| KIND | ALUM. CASTING | CHANGED | | |
| SHAPE | " | " " | | |
| FINISH | BLK. LACQUER | " " | | |
| TEMP. | | " " | | H. G. FISCHER & CO. 2335 WABANSIA AVE. CHICAGO, ILL. — CAT. NO. — PART NO. 8401F |
| PATT. | 5565-G64 | " " | | |

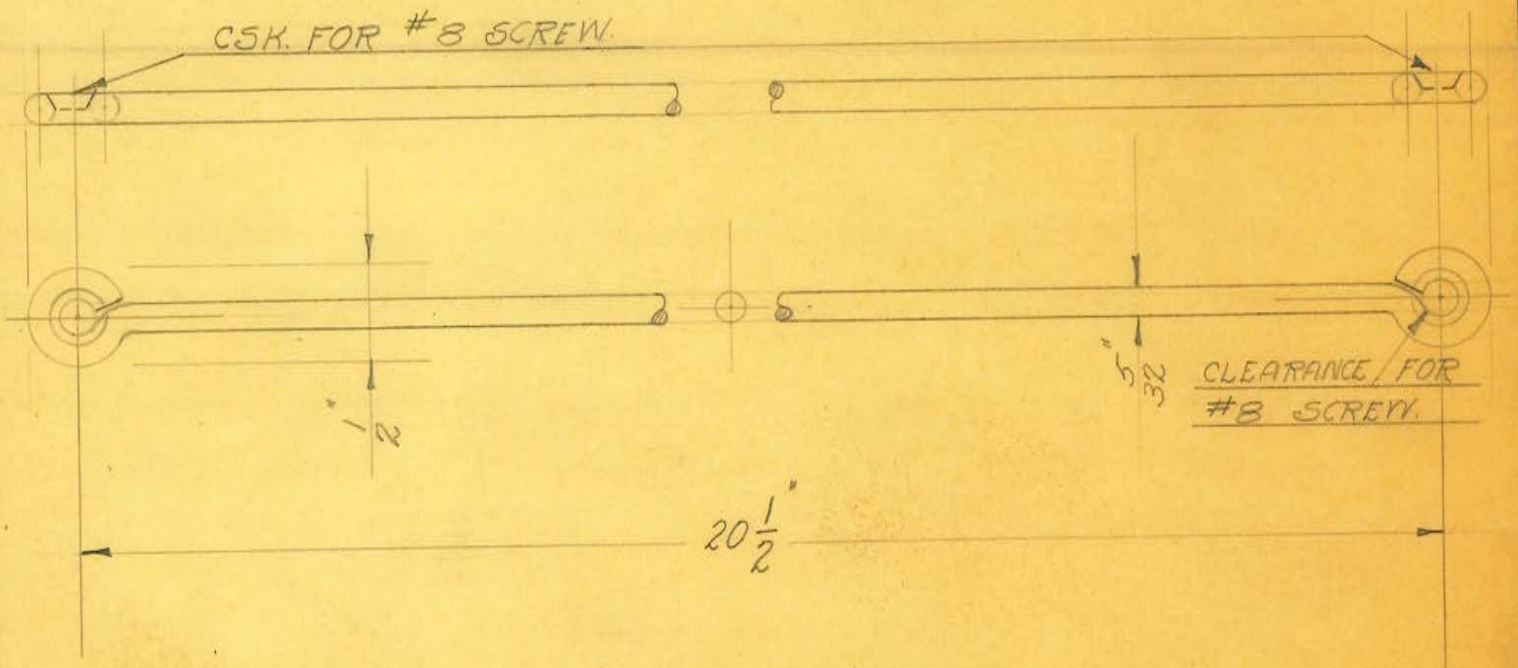


1 REQUIRED

OBSOLETE

| | | | | |
|---|---|---|---|---|
| SIZE | 5/32 ROD | ISSUE 10-10-33 | N.R. | **TITLE:** UNIVERSAL "CO-88" SHUTTER OPER. ROD CONNECTING ROD |
| KIND | D. ALUM. | CHANGED | | |
| SHAPE | | " " | | |
| FINISH | POLISH | " " | | |
| TEMP. | | " " | | |
| PATT. | | " " | | |

H. G. FISCHER & CO.
2335 WABANSIA AVE.
CHICAGO, ILL.

CAT. NO.

PART NO. 8402

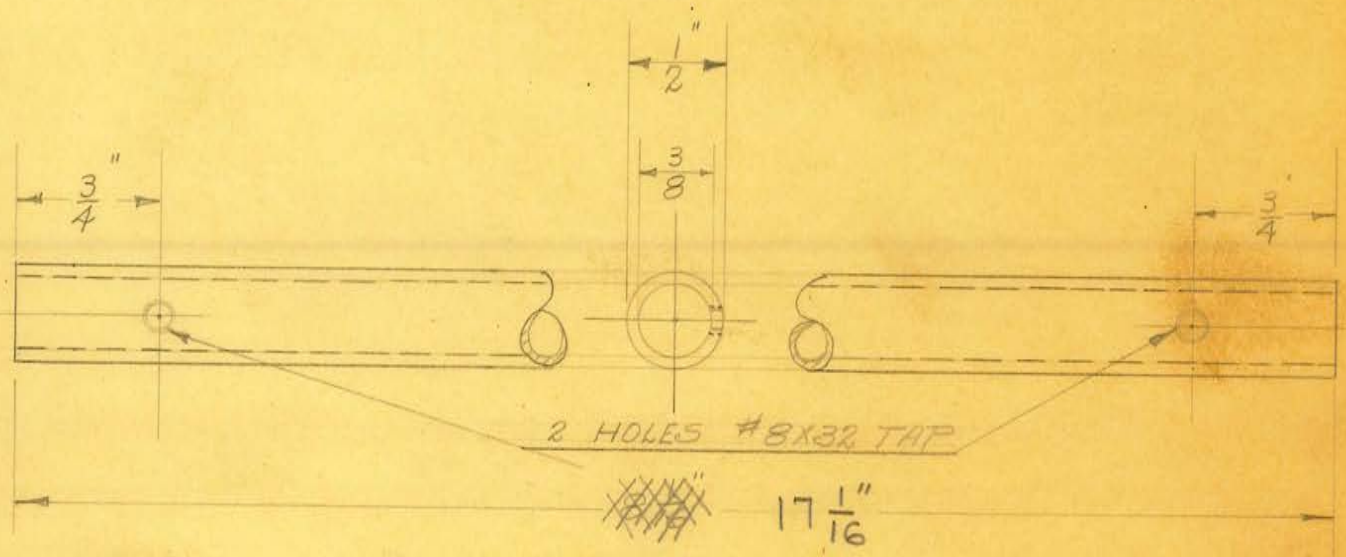


1 REQUIRED.

OBSOLETE

| | | | | |
|---|---|---|---|---|
| SIZE | 3/8" I.D.-1/2 O.D. | ISSUE 10-11-33 | N.P. | TITLE: UNIVERSAL "GO-88" SHUTTER OPERATING TUBE |
| KIND | D. ALUM. | CHANGED | | |
| SHAPE | | " "6-29-44 | J.V.W. | |
| FINISH | POLISH | " " | | |
| TEMP. | | " " | | H. G. FISCHER & CO. 2335 WABANSIA AVE. CHICAGO, ILL. — CAT. NO. — PART NO. 8403A |
| PATT. | | " " | | |

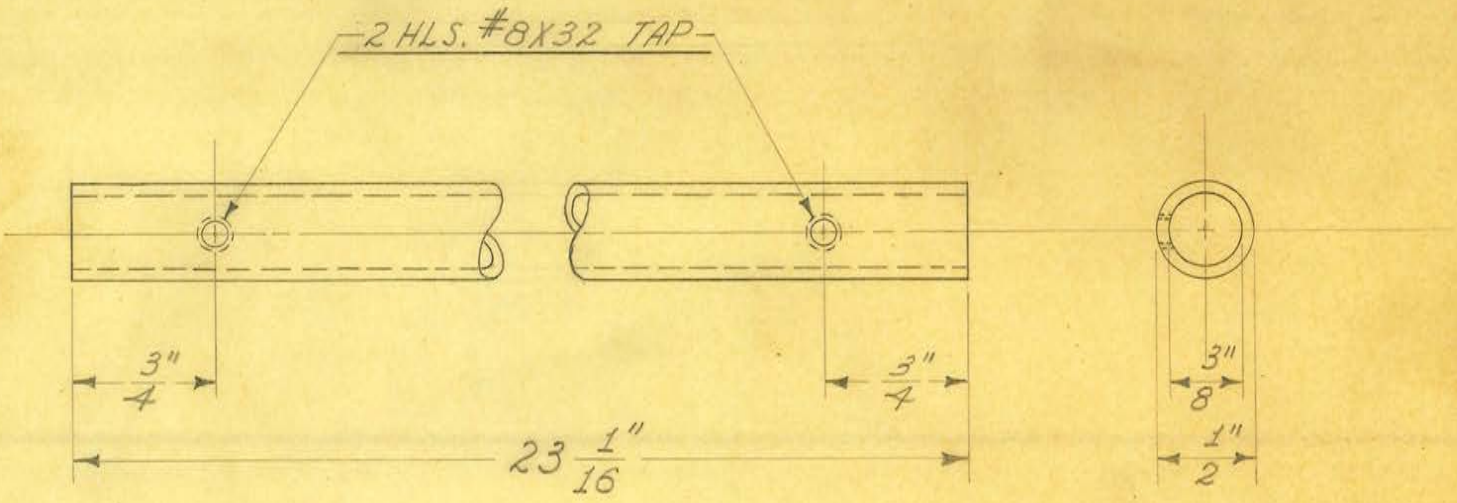


1 REQUIRED

OBSOLETE

| | | | |
|---|---|---|---|
| SIZE | 3/8" I.D. X 1/2" O.D. | ISSUE 9-10-37 | J.W. |
| KIND | DURALUMINUM | CHANGED | |
| SHAPE | TUBING | " | |
| FINISH | POLISH | " | |
| TEMP. | | " | |
| PATT. | | " | |

**TITLE:** UNIVERSAL "60-88" SHUTTER OPERATING TUBE (15" LONGER FOR SO. AMERICA -DIAZ & SUAREZ-)

H. G. FISCHER & CO.
2335 WABANSIA AVE.
CHICAGO, ILL.

CAT. NO.

PART NO. 8403 1/2

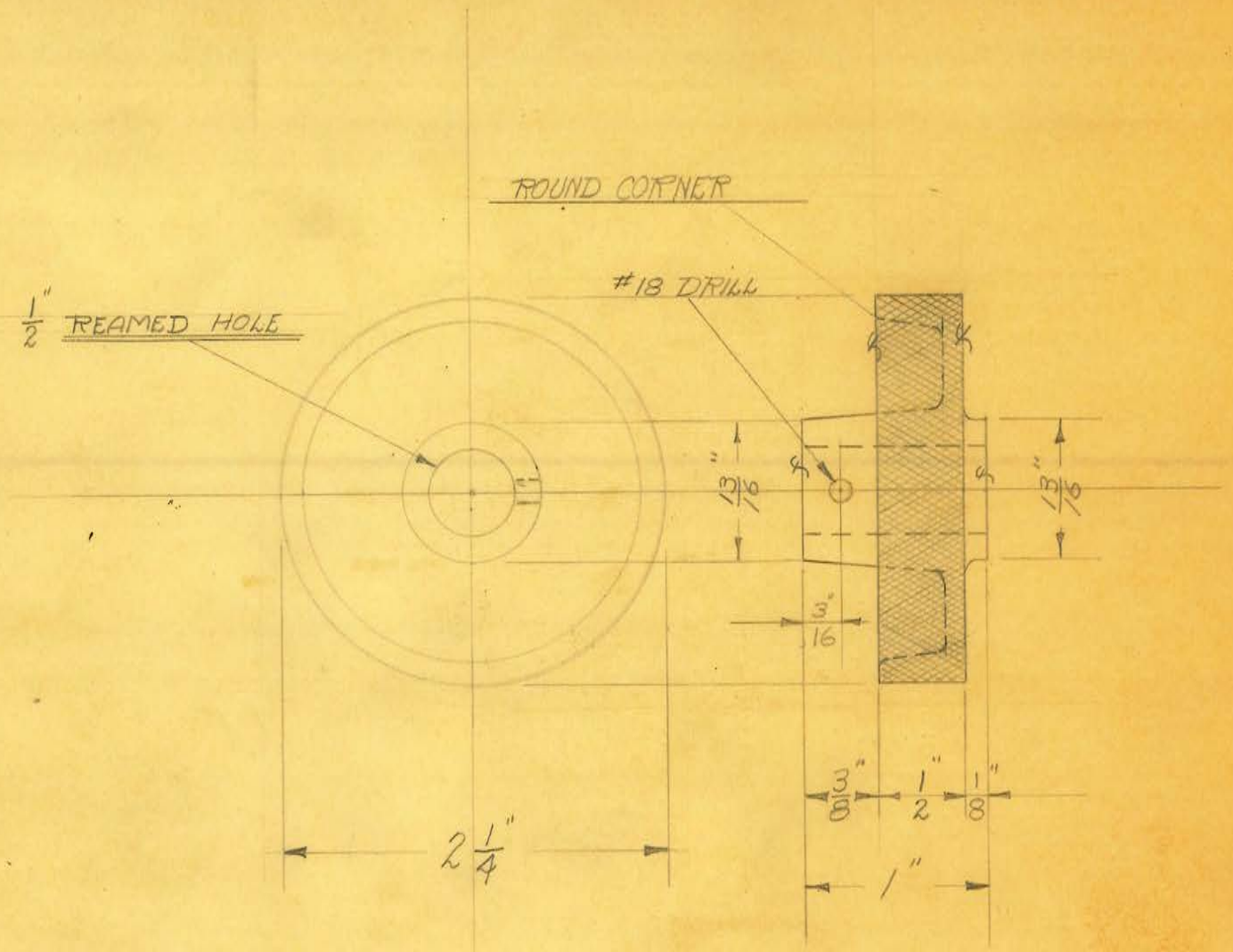


1 REQUIRED

OBSOLETE

| | | | | |
|---|---|---|---|---|
| SIZE | | ISSUE 10-10-33 | N.P. | **TITLE:** UNIVERSAL "GO-88" SHUTTER OPERATING TUBE KNOB |
| KIND | ALUM. CASTING | CHANGED | | |
| SHAPE | | " " | | |
| FINISH | POLISH | " " | | |
| TEMP. | | " " | | H. G. FISCHER & CO. 2335 WABANSIA AVE. CHICAGO, ILL. — CAT. NO. — PART NO. 8404F |
| PATT. | #5621-666 | " " | | |

58

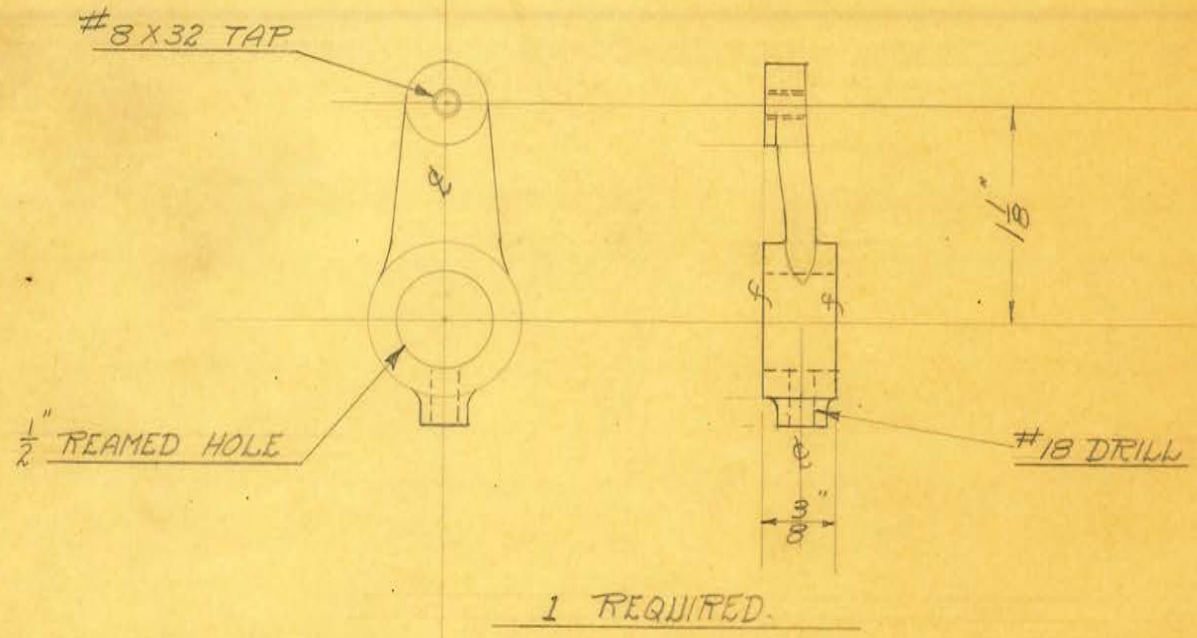


1 REQUIRED.

OBSOLETE

| | | | |
|---|---|---|---|
| SIZE | | ISSUE 10-10-33 | N.P. |
| KIND | ALUM. CASTING | CHANGED | |
| SHAPE | | " " | |
| FINISH | BLK. LACQUER | " " | |
| TEMP. | | " " | |
| PATT. | #5565-664 | " " | |

**TITLE:** UNIVERSAL "GO-88" SHUTTER OPERATING TUBE LEVER

H. G. FISCHER & CO.
2335 WABANSIA AVE.
CHICAGO, ILL.

CAT. NO.

PART NO. 8405F

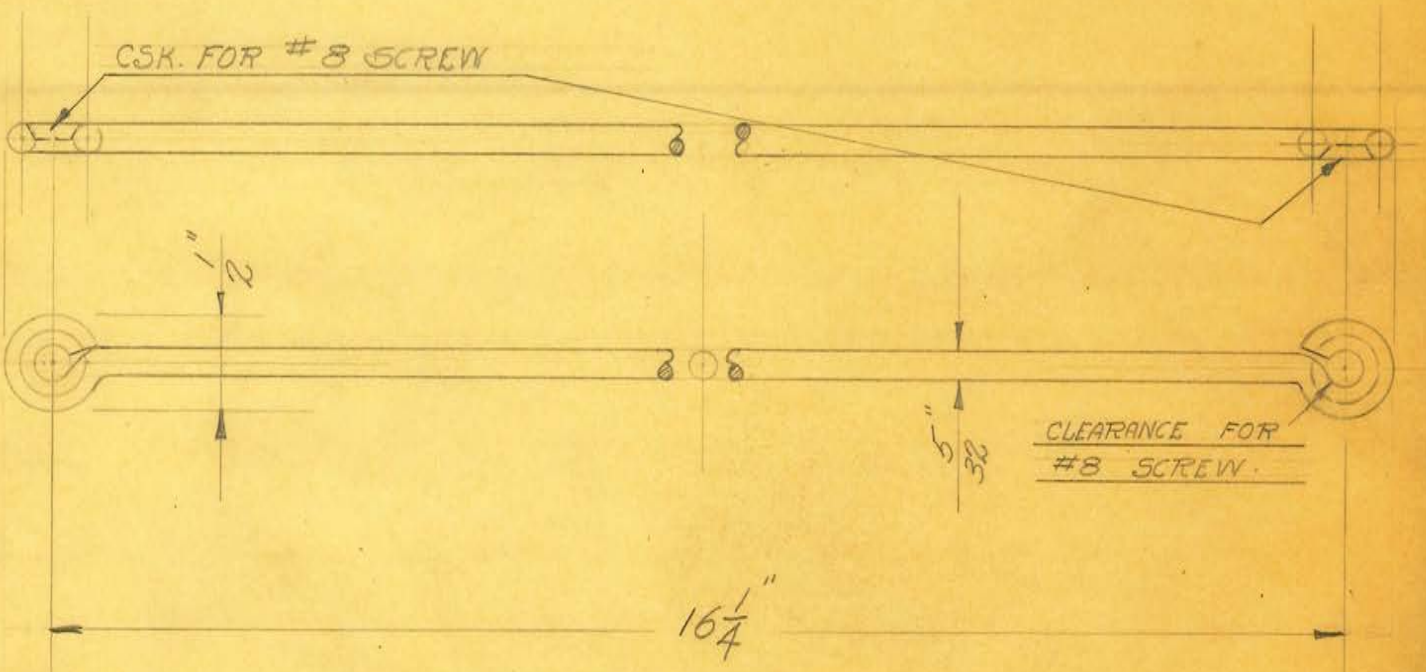


1 REQUIRED

OBSOLETE

| | | | | |
|---|---|---|---|---|
| SIZE | 5/32" ROD | ISSUE 10-10-33 | N.P. | TITLE: UNIVERSAL "60-88" SHUTTER OPER. TUBE CONNECTING ROD |
| KIND | D. ALUM. | CHANGED | | |
| SHAPE | | " " | | |
| FINISH | POLISH | " " | | |
| TEMP. | | " " | | H. G. FISCHER & CO. 2335 WABANSIA AVE. CHICAGO, ILL. — CAT. NO. — PART NO. 8406 |
| PATT. | | " " | | |

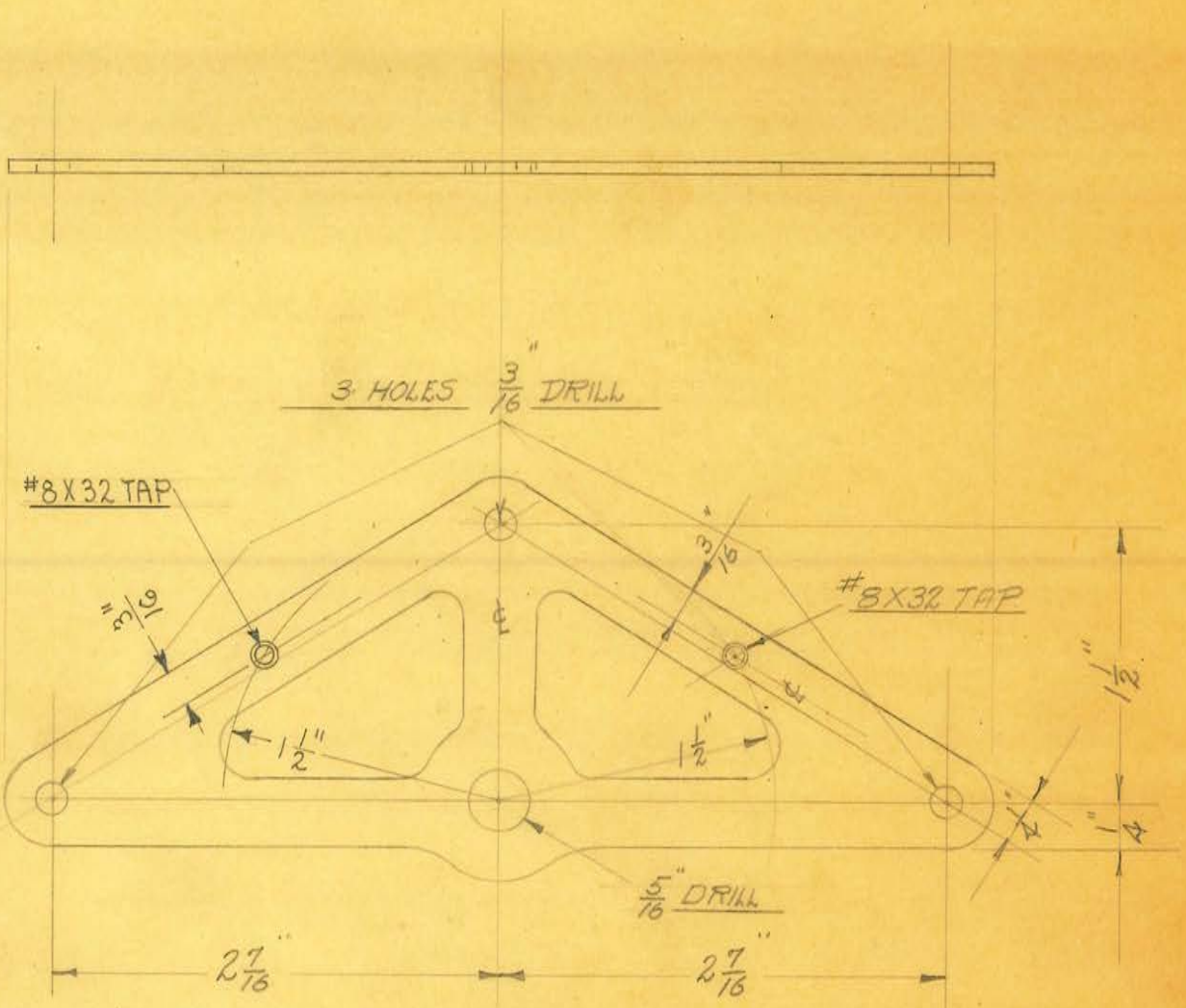


1 REQUIRED

OBSOLETE

| | | | | |
|---|---|---|---|---|
| SIZE | 1/16" SHEET | ISSUE 10-11-33 | N.P | TITLE: UNIVERSAL "60-88" SHUTTER ARM - RIGHT HORIZ. |
| KIND | C.R.S. (HARD STK) | CHANGED | | |
| SHAPE | | " " | | |
| FINISH | CAD. PLATE | " " | | |
| TEMP. | | " " | | H. G. FISCHER & CO. 2335 WABANSIA AVE. CHICAGO, ILL. — CAT. NO. — PART NO. 8407F |
| PATT. | | " " | | |

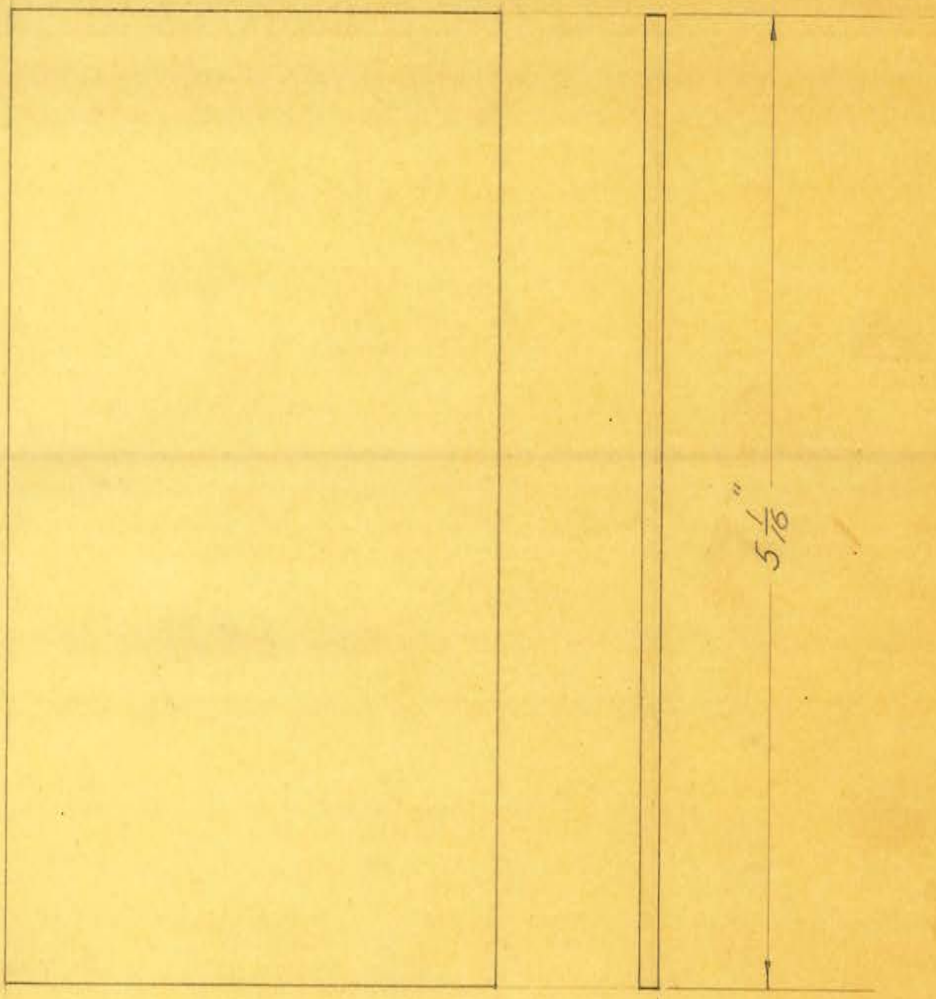


OBSOLETE

4 REQUIRED

Obsolete
5-9-50

| | | | | |
|---|---|---|---|---|
| SIZE | 3/32" THICK. | ISSUE 10-9-33 | N.F. | **TITLE:** UNIVERSAL "60-88" SHUTTER PLATE-LEAD |
| KIND | LEAD PLATE | CHANGED | | |
| SHAPE | | " " | | |
| FINISH | | " " | | |
| TEMP. | | " " | | |
| PATT. | | " " | | |

H. G. FISCHER & CO.
2335 WABANSIA AVE.
CHICAGO, ILL.

CAT. NO.

PART NO. 8409

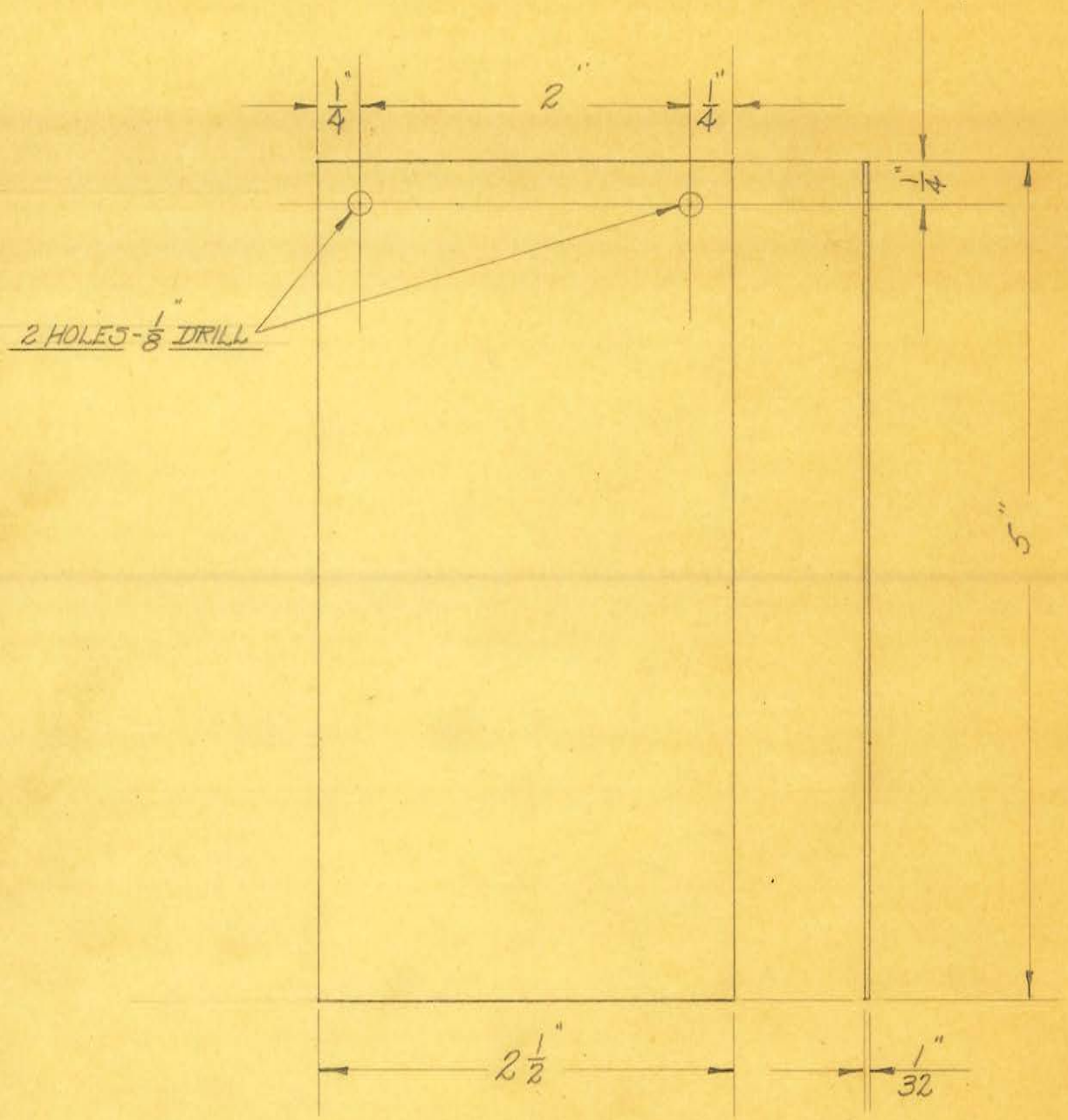


4 REQUIRED

OBSOLETE

Obsolete 5-9-50

| | | | | |
|---|---|---|---|---|
| SIZE | 1/32" SHEET | ISSUE 10-9-33 | N.R. | TITLE: UNIVERSAL "60-88" SHUTTER PLATE - STEEL |
| KIND | C.R. STEEL | CHANGED | | |
| SHAPE | | " " | | |
| FINISH | | " " | | |
| TEMP. | | " " | | H. G. FISCHER & CO. 2335 WABANSIA AVE. CHICAGO, ILL. — CAT. NO. — PART NO. 8410 |
| PATT. | | " " | | |

## LEAD & STEEL PLATES ASSEMBLED

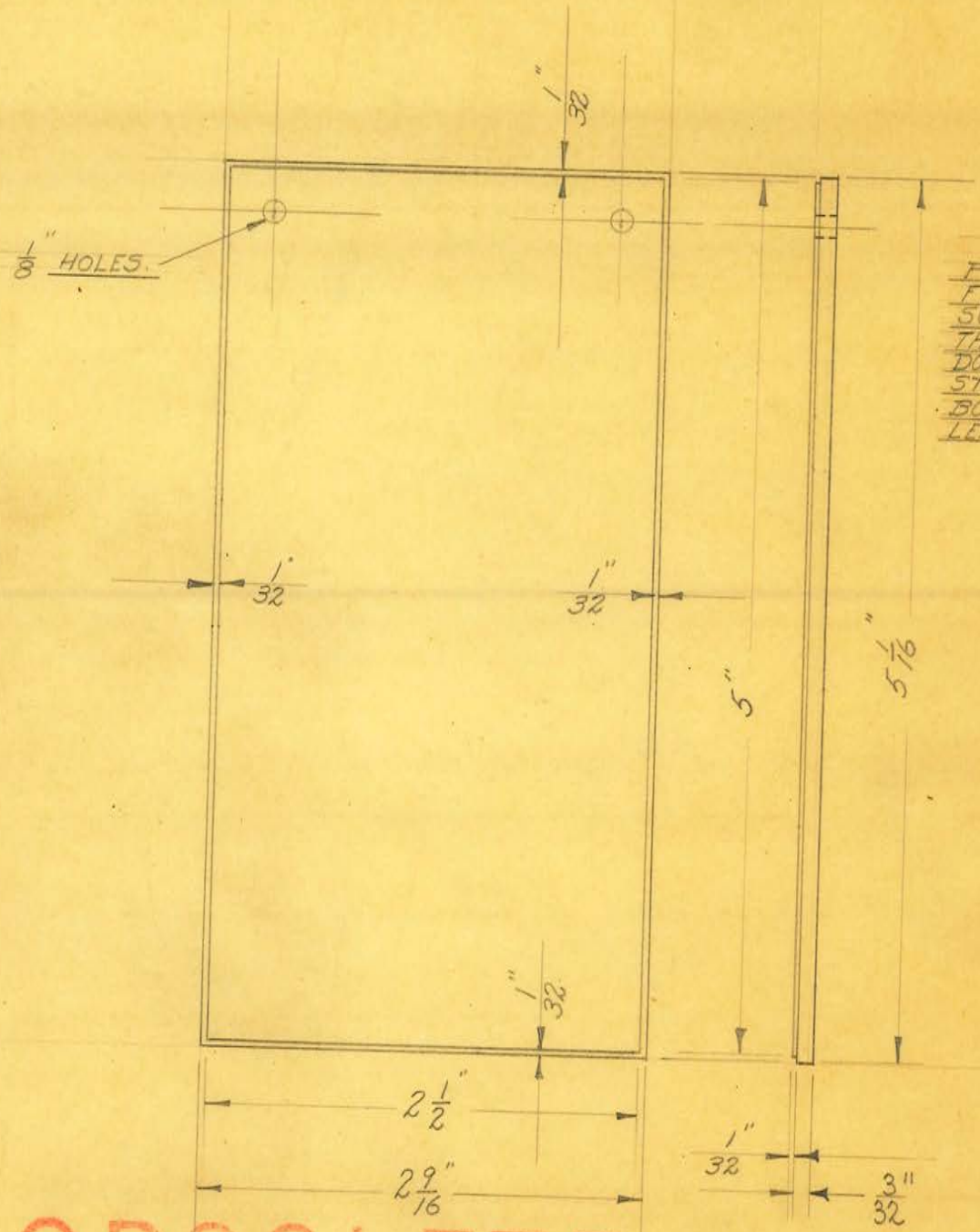


"NOTE"
PLATES TO BE HELD FIRMLY TOGETHER & SOLDERED ON 4 EDGES. THEN FILE LEAD PLATE DOWN TO SAME SIZE AS STEEL PLATE. FINISH BORING HOLES THRU LEAD PLATE.

OBSOLETE

| | | | |
|---|---|---|---|
| SIZE | | ISSUE 10-9-33 | N.P. |
| KIND | | CHANGED | |
| SHAPE | | " " | |
| FINISH | CAD. PLATE | " " | |
| TEMP. | | " " | |
| PATT. | | " " | |

**TITLE:** UNIVERSAL "60-88" SHUTTER PLATE ASSEMBLY

H. G. FISCHER & CO.
2335 WABANSIA AVE.
CHICAGO, ILL.

CAT. NO.

PART NO. 8410G

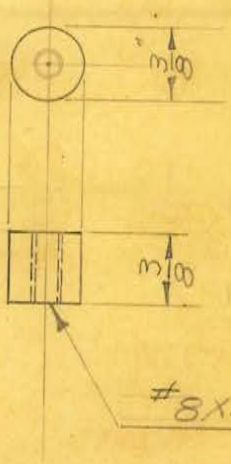


1 REQUIRED

OBSOLETE

| | | | |
|---|---|---|---|
| SIZE | 3/16" ROD. | ISSUE 10-9-33 | N.P |
| KIND | ALUMINUM | CHANGED | |
| SHAPE | | " " | |
| FINISH | POLISH | " " | |
| TEMP. | | " " | |
| PATT. | | " " | |

**TITLE:** UNIVERSAL "CO-88" SHUTTER-VERT. SHUTTER STOP & CONNECTING ROD POST

H. G. FISCHER & CO.
2335 WABANSIA AVE.
CHICAGO, ILL.

CAT. NO.

PART NO. 8417

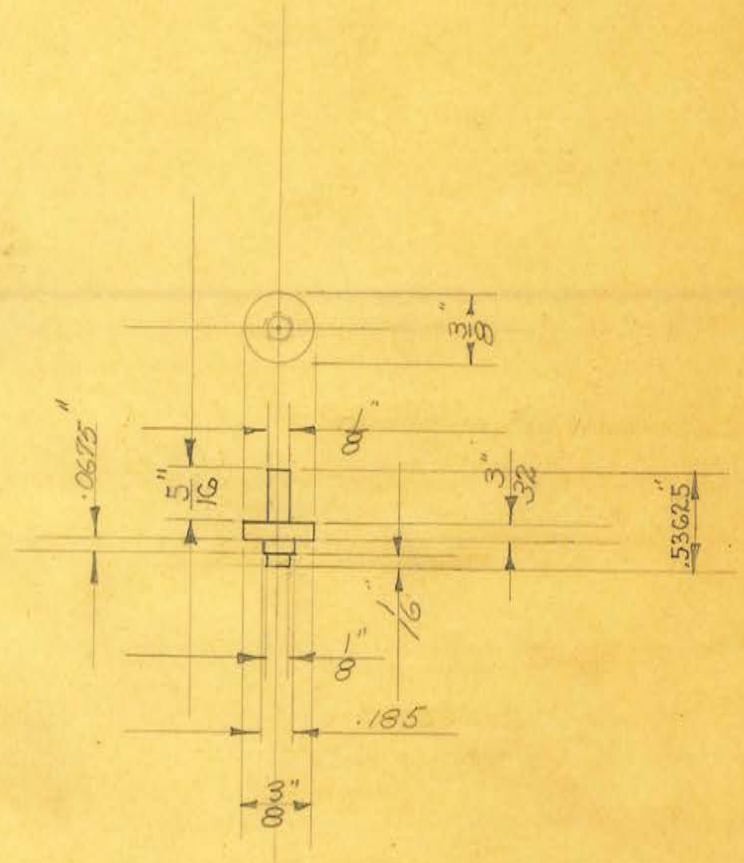


4 REQUIRED.

OBSOLETE

see new Tracing

| | | | | |
|---|---|---|---|---|
| SIZE | 3/8 ROD. | ISSUE 10-10-33 | N.P. | **TITLE:** UNIVERSAL "GO-88" SHUTTER RIVET-LONG |
| KIND | C.R. STEEL. | CHANGED | | |
| SHAPE | | " " | | |
| FINISH | CAD. #23 | " " | | |
| TEMP. | | " " | | H. G. FISCHER & CO. 2335 WABANSIA AVE. CHICAGO, ILL. — CAT. NO. — PART NO. 8418 |
| PATT. | | " " | | |

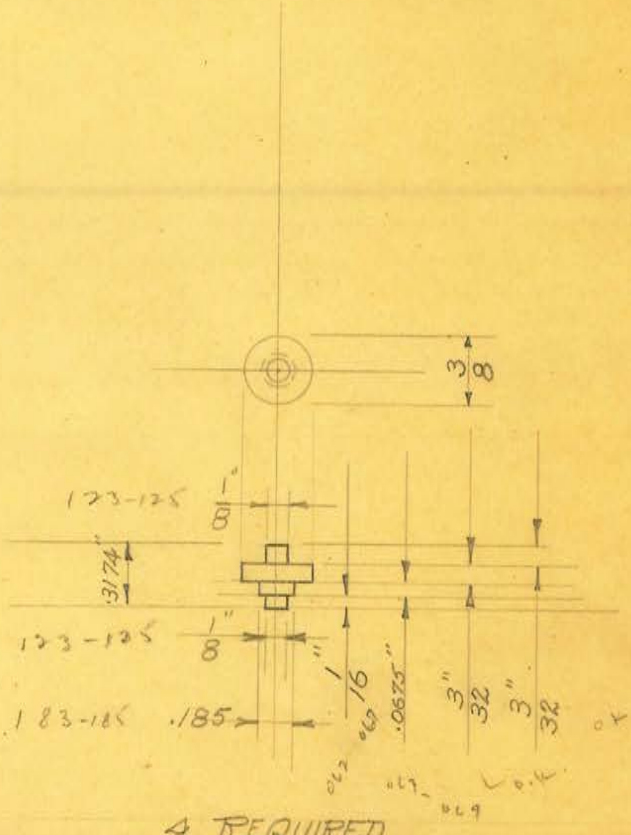


4 REQUIRED

OBSOLETE

See new Tracing

| | | | | |
|---|---|---|---|---|
| SIZE | 3/8 ROD. | ISSUE 10-10-33 | N.P. | TITLE: UNIVERSAL "CO-88" SHUTTER RIVET - SHORT |
| KIND | C.R. STEEL | CHANGED | | |
| SHAPE | | " " | | |
| FINISH | | " " | | |
| TEMP. | | " " | | H. G. FISCHER & CO. 2335 WABANSIA AVE. CHICAGO, ILL. — CAT. NO. — PART NO. 8419 |
| PATT. | | " " | | |

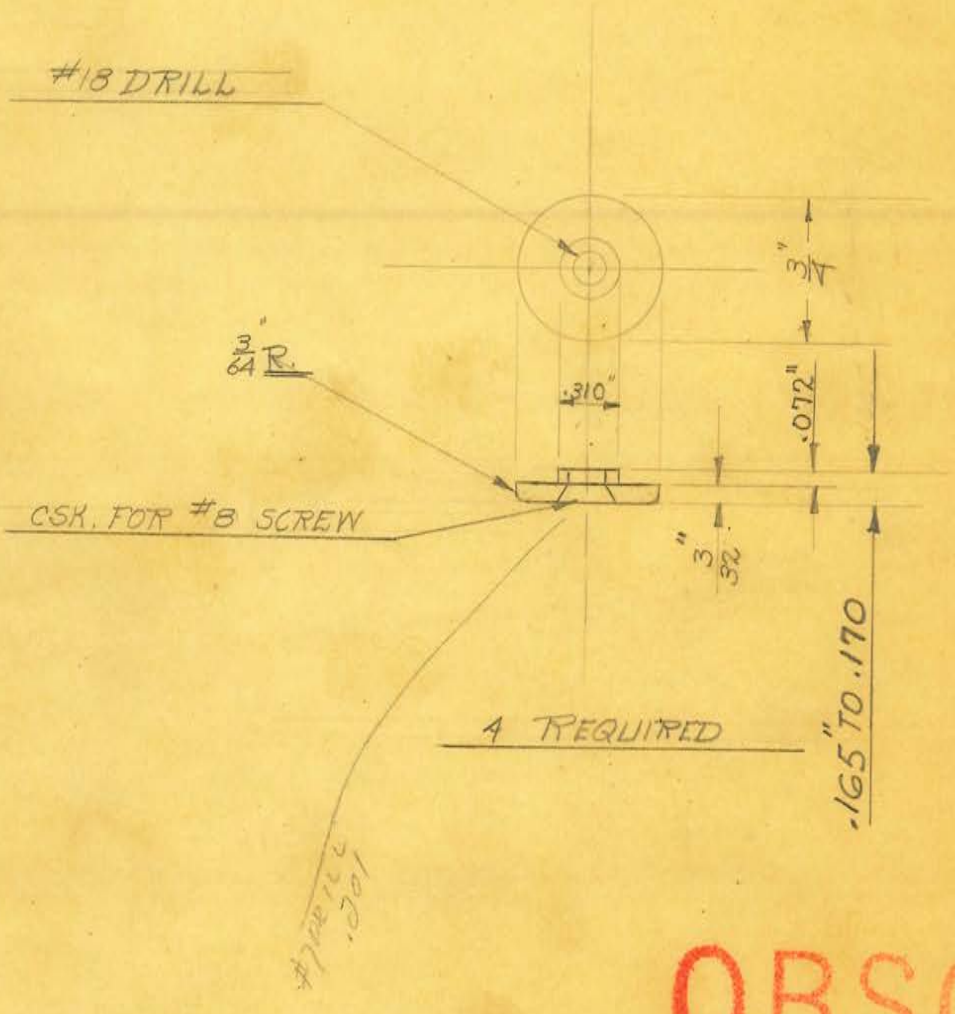


OBSOLETE

| | | | |
|---|---|---|---|
| SIZE | 3/4" ROD | ISSUE/10-9-33 | N.P |
| KIND | C.R. STEEL | CHANGED | |
| SHAPE | | " " | |
| FINISH | CAD. #23 | " " | |
| TEMP. | | " " | |
| PATT. | | " " | |

**TITLE:** UNIVERSAL "60-88" SHUTTER ARM BUSHING

H. G. FISCHER & CO.
2335 WABANSIA AVE.
CHICAGO, ILL.

CAT. NO.

PART NO. 8420

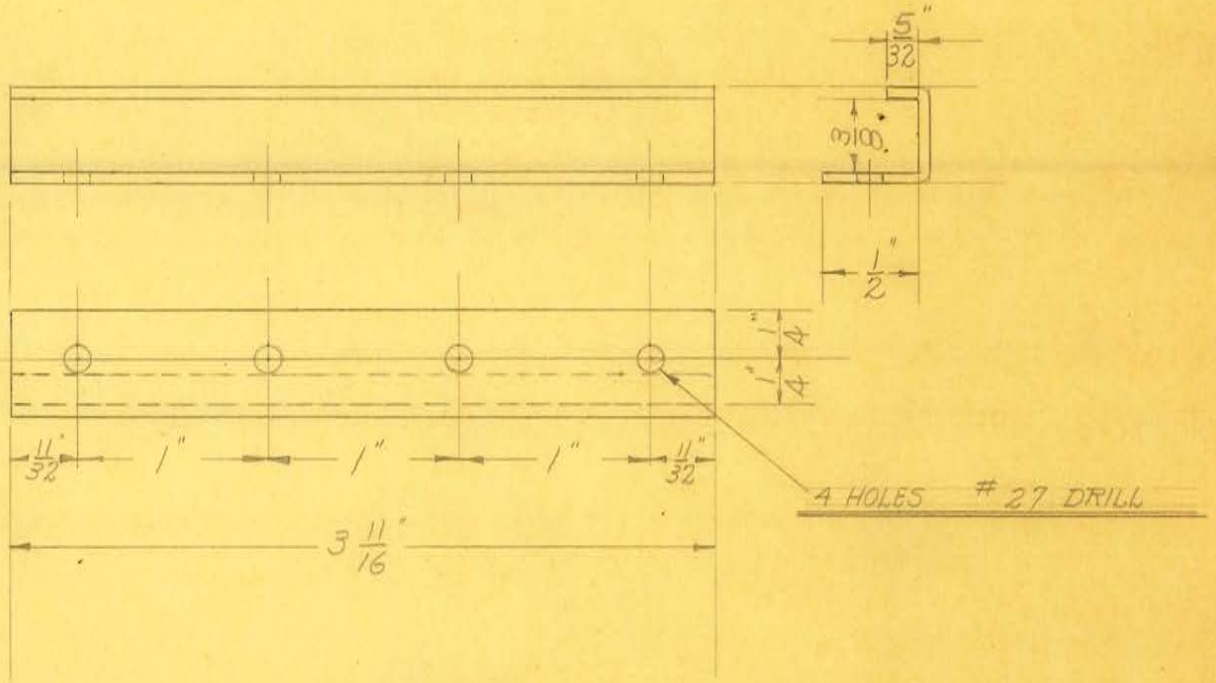


TWO REQUIRED

OBSOLETE

| | | | | |
|---|---|---|---|---|
| SIZE | 1/16" SHEET - 1 3/32" WIDE | ISSUE 10-24-33 | N.P | TITLE: UNIVERSAL "60-88" SHUTTER CHANNEL STRIP |
| KIND | C.R. STEEL | CHANGED | | |
| SHAPE | | " | | |
| FINISH | CAD. PLATE | " | | |
| TEMP. | | " | | |
| PATT. | | " | | |

H. G. FISCHER & CO.
2335 WABANSIA AVE.
CHICAGO, ILL.

CAT. NO.

PART NO. 8421

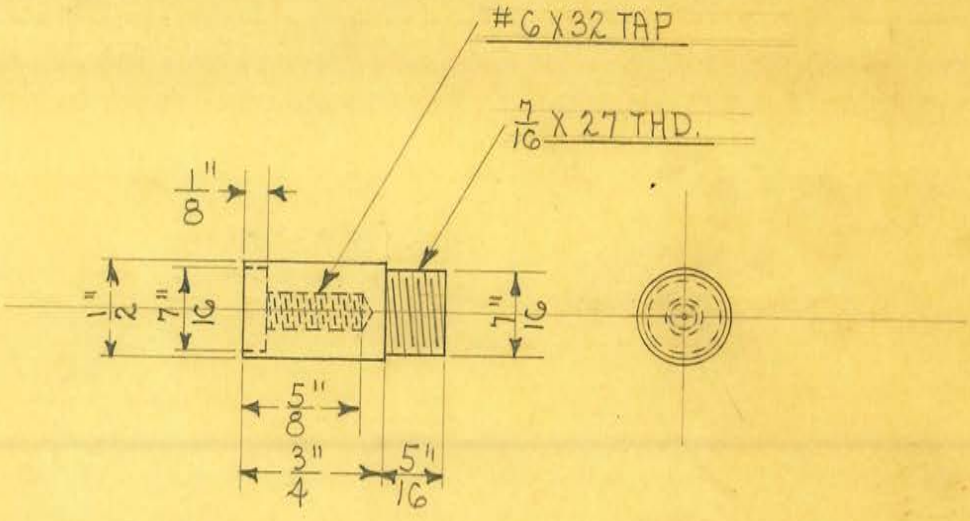


2 REQUIRED

OBSOLETE

| | | | | |
|---|---|---|---|---|
| SIZE | 1/2" DIA. | ISSUE 3-13-34 | 2/6. | TITLE: UNIVERSAL "60-88" MOBILE UNIT BASE STOP LOWER PLUNGER STOP PIECE |
| KIND | BRASS ROD. | CHANGED | | |
| SHAPE | | " | | |
| FINISH | | " | | |
| TEMP. | | " | | |
| PATT. | | " | | |

H. G. FISCHER & CO.
2335 WABANSIA AVE.
CHICAGO, ILL.

CAT. NO.

PART NO. 8423

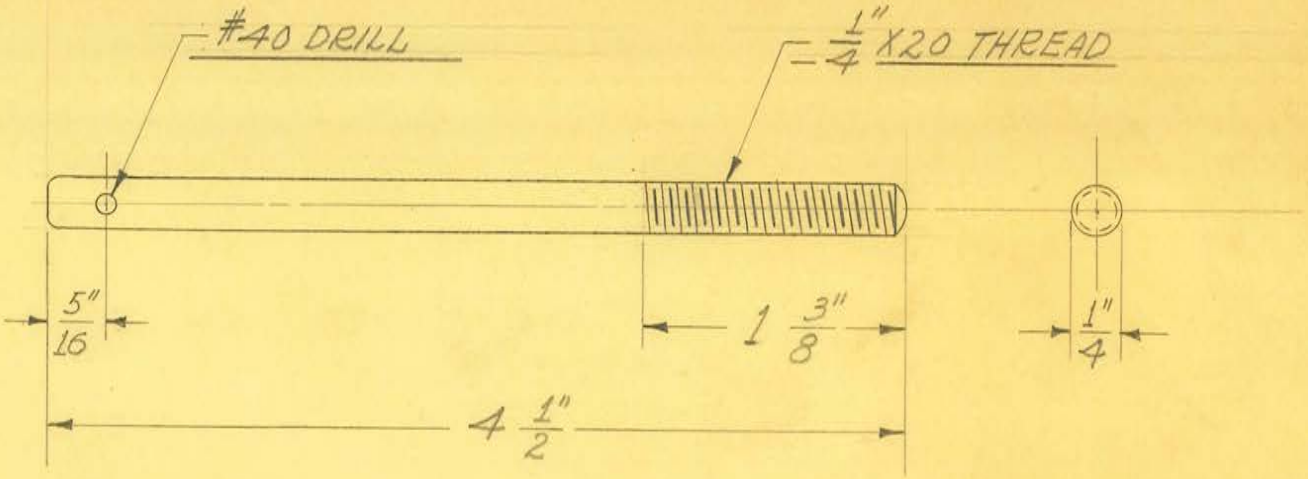


1 REQUIRED

OBSOLETE

obsolete

| | | | | |
|---|---|---|---|---|
| SIZE | 1/4" DIAM. | ISSUE 2-26-38 | J.W. | TITLE: FISCHER MOD. "G" SHOCKPROOF FLUOROSCOPE SLIDE LOCK PIECE - CLAMP ROD |
| KIND | C.R. STEEL | CHANGED | | |
| SHAPE | ROD | " | | |
| FINISH | CAD. #23 | " | | |
| TEMP. | | " | | |
| PATT. | | " | | |

H. G. FISCHER & CO.
2335 WABANSIA AVE.
CHICAGO, ILL.

CAT. NO.

PART NO. 11357

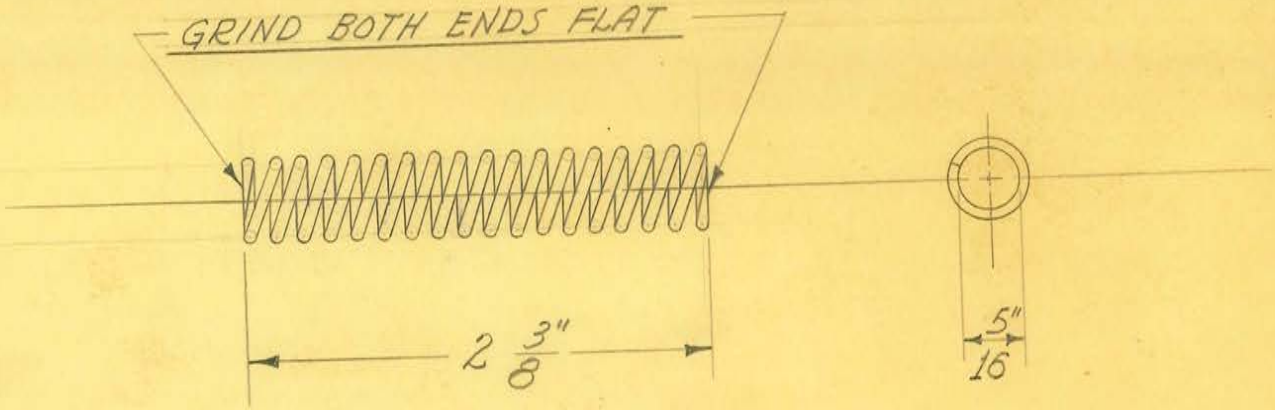


18 TURNS

1 REQUIRED

OBSOLETE

obsolete

| | | | |
|---|---|---|---|
| SIZE | .050" | ISSUE 2-26-38 | J.W. |
| KIND | PIANO WIRE | CHANGED | |
| SHAPE | | " | |
| FINISH | CAD. #23 | " | |
| TEMP. | | " | |
| PATT. | | " | |

**TITLE:** FISCHER MOD. "G" SHOCKPROOF FLUOROSCOPE SLIDE LOCK PIECE CLAMP SPRING

H. G. FISCHER & CO.
2335 WABANSIA AVE.
CHICAGO, ILL.

CAT. NO.

PART NO. 11358

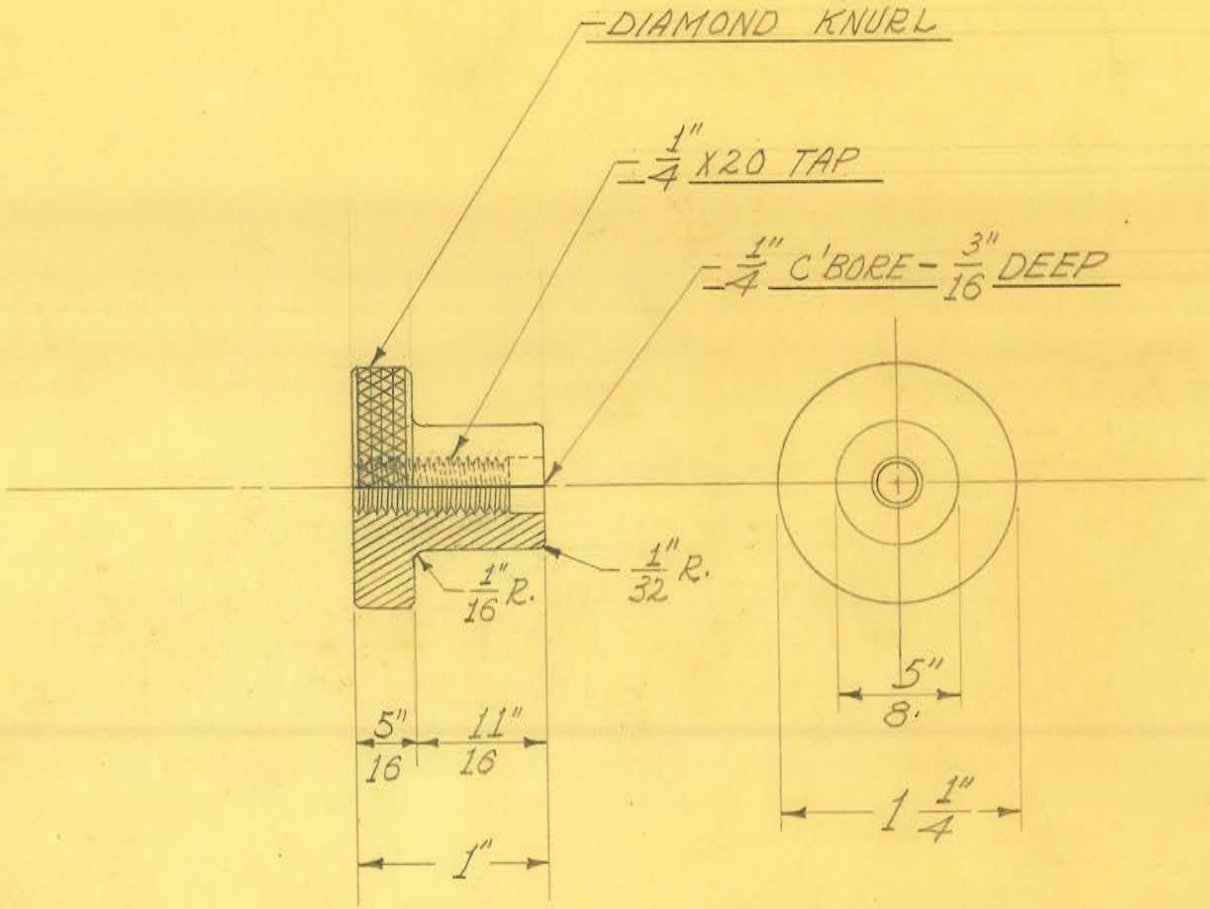


1 REQUIRED

OBSOLETE

obsolete

| | | | |
|---|---|---|---|
| SIZE | 1 1/4" DIAM. | ISSUE 2-26-38 | J.W. |
| KIND | C.R. STEEL | CHANGED | |
| SHAPE | ROD | " | |
| FINISH | CAD. #23 | " | |
| TEMP. | | " | |
| PATT. | | " | |

**TITLE:** FISCHER MOD. "G" SHOCKPROOF FLUOROSCOPE SLIDE LOCK PIECE CLAMP THUMB NUT

H. G. FISCHER & CO.
2335 WABANSIA AVE.
CHICAGO, ILL.

CAT. NO.

PART NO. 11359

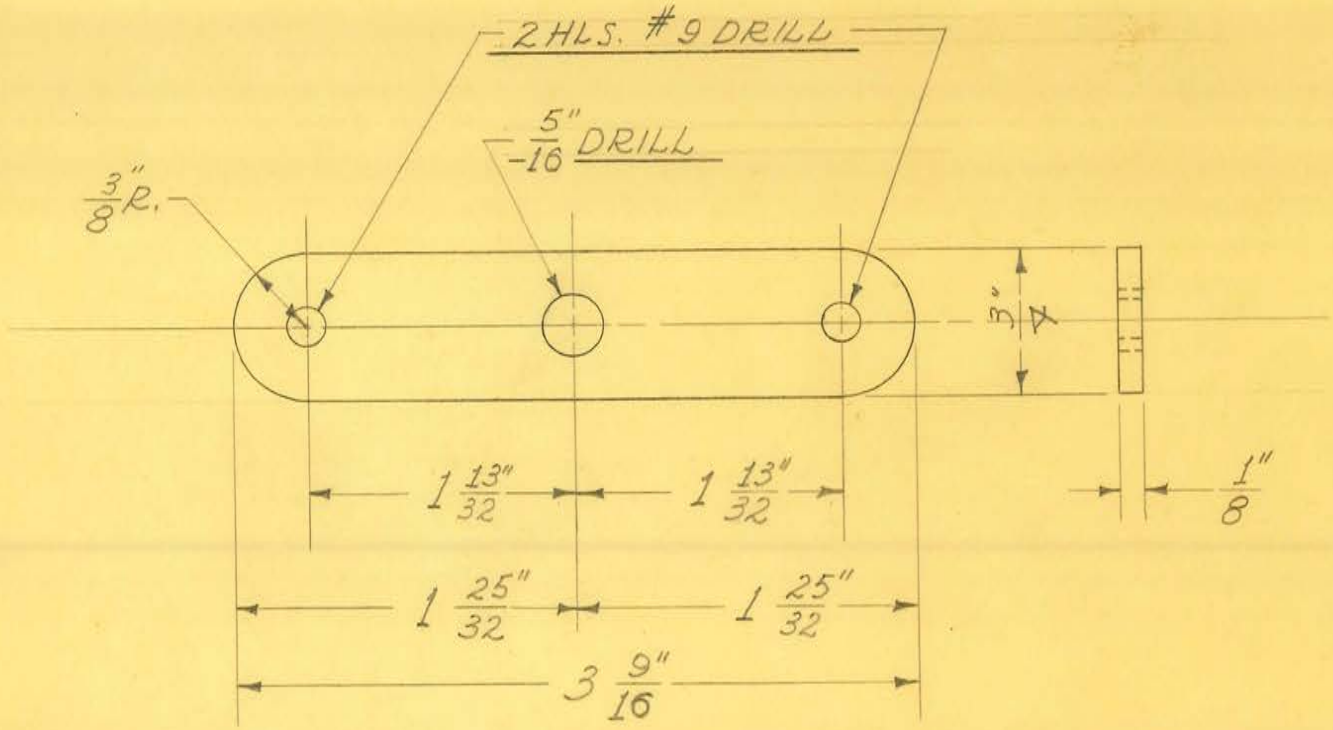


2 REQUIRED

OBSOLETE

obsolete

| | | | |
|---|---|---|---|
| SIZE | 3/4" X 1/8" | ISSUE 2-26-38 | J.W. |
| KIND | C.R. STEEL | CHANGED | |
| SHAPE | STRIP | " | |
| FINISH | CAD. #23 | " | |
| TEMP. | | " | |
| PATT. | | " | |

**TITLE:** FISCHER MOD. "G" SHOCK PROOF FLUOROSCOPE
SLIDE LOCK PIECE SUPPORT LINK

H. G. FISCHER & CO.
2335 WABANSIA AVE.
CHICAGO, ILL.

CAT. NO.

PART NO. 11360

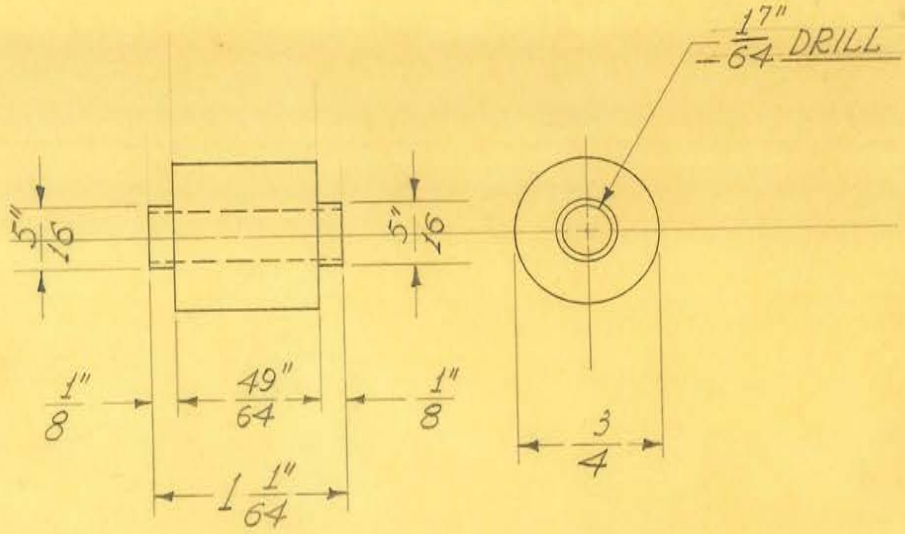


1 REQUIRED

OBSOLETE

obsolete

| | | | | |
|---|---|---|---|---|
| SIZE | 3/4" DIAM. | ISSUE 3-8-38 | J.W. | TITLE: FISCHER MOD. "G" SHOCKPROOF FLUOROSCOPE SLIDE LOCK PIECE – SUPP. BUSHING |
| KIND | C.R. STEEL | CHANGED | | |
| SHAPE | ROD | " | | |
| FINISH | CAD. #23 | " | | |
| TEMP. | | " | | |
| PATT. | | " | | |

H. G. FISCHER & CO.
2335 WABANSIA AVE.
CHICAGO, ILL.

CAT. NO.

PART NO. 11361

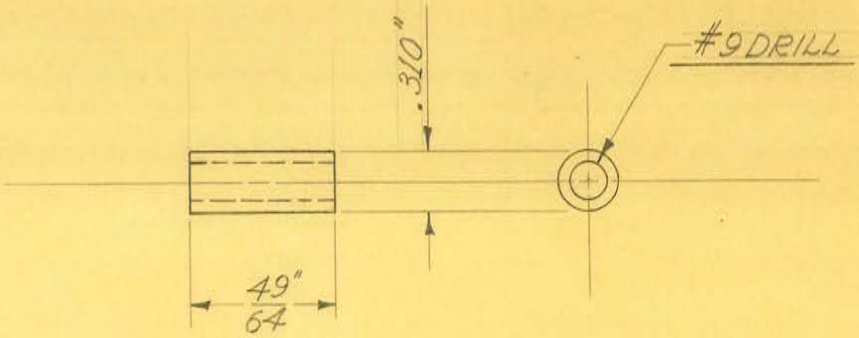


2 REQUIRED

OBSOLETE

obsolete

| | | | |
|---|---|---|---|
| SIZE | 5/16" DIAM. | ISSUE 3-8-38 | J.W. |
| KIND | C.R. STEEL | CHANGED | |
| SHAPE | ROD | " | |
| FINISH | | " | |
| TEMP. | | " | |
| PATT. | | " | |

**TITLE:** FISCHER MOD. "G" SHOCKPROOF FLUOROSCOPE
SLIDE LOCK PIECE - SWIVEL BUSHING

H. G. FISCHER & CO.
2335 WABANSIA AVE.
CHICAGO, ILL.

CAT. NO.

PART NO. 11362

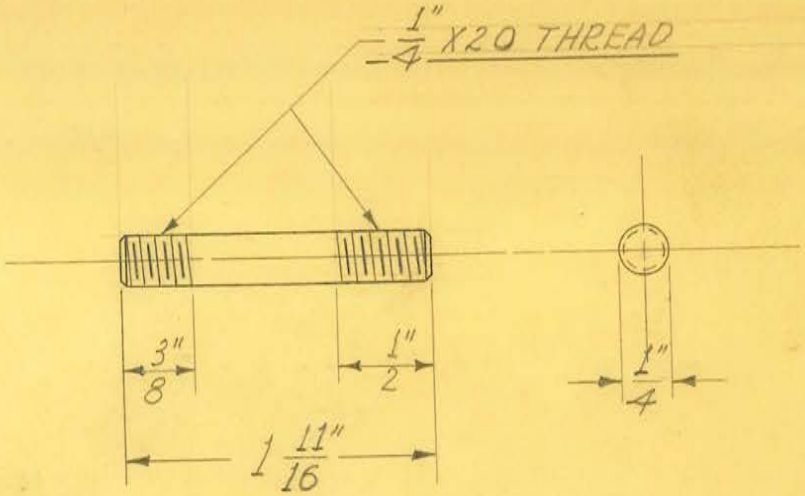


1 REQUIRED

OBSOLETE

obsolete

| | | | |
|---|---|---|---|
| SIZE | 1/4" DIAM. | ISSUE 2-26-38 | J.W. |
| KIND | C.R. STEEL | CHANGED | |
| SHAPE | ROD | " | |
| FINISH | CAD. #23 | " | |
| TEMP. | | " | |
| PATT. | | " | |

**TITLE:** FISCHER MOD. "G" SHOCKPROOF FLUOROSCOPE
SLIDE LOCK PIECE SUPPORT STUD

H. G. FISCHER & CO.
2335 WABANSIA AVE.
CHICAGO, ILL.

CAT. NO.

PART NO. 11363

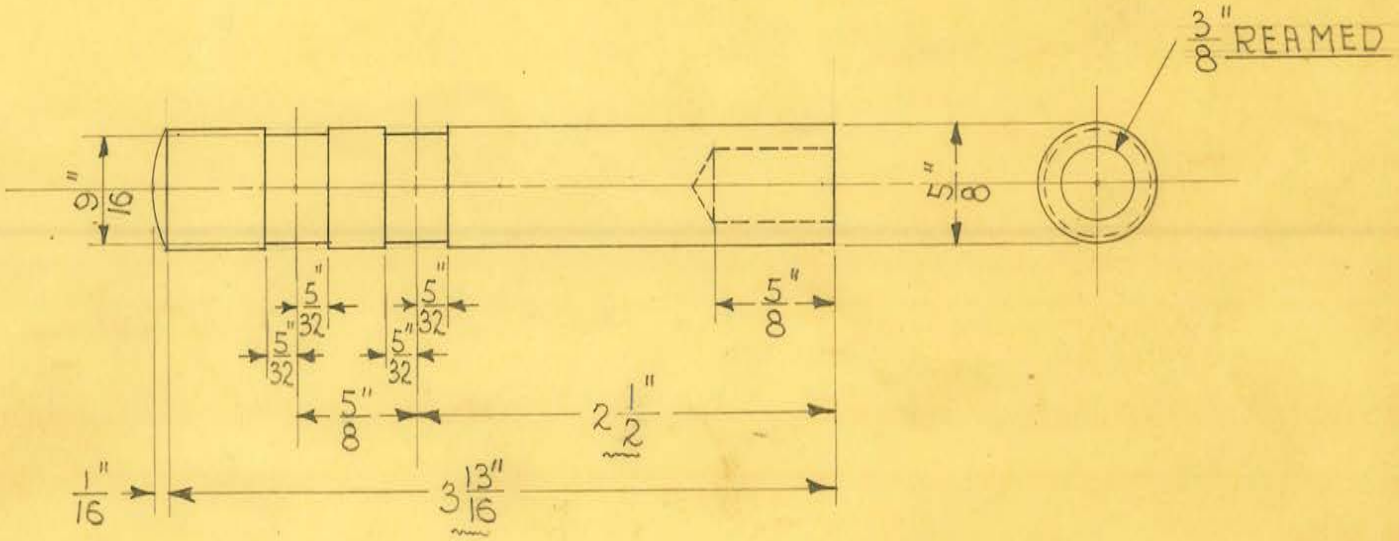


1 REQUIRED

OBSOLETE

Obsolete

| | | | |
|---|---|---|---|
| SIZE | 5/8" DIAM. | ISSUE 3-1-38 | J.E. |
| KIND | JEWELERS ROD | CHANGED 6-30-38 | H.E. |
| SHAPE | | " | |
| FINISH | | " | |
| TEMP. | | " | |
| PATT. | | " | |

**TITLE:** FISCHER MOD. "G" SHOCKPROOF FLUOROSCOPE-SCREEN FORK SHAFT

H. G. FISCHER & CO.
2335 WABANSIA AVE.
CHICAGO, ILL.

CAT. NO.

PART NO. 11366A

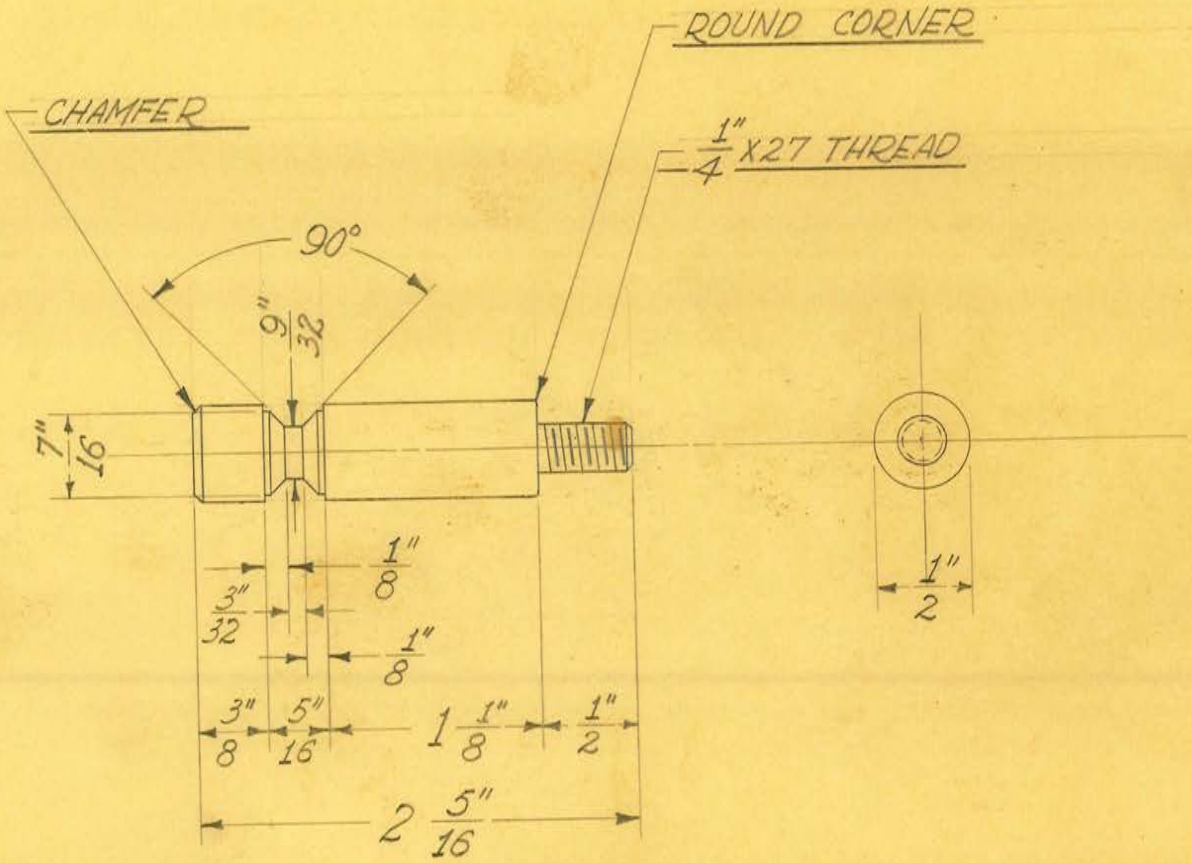


1 REQUIRED

OBSOLETE

| | | | |
|---|---|---|---|
| SIZE | 1/2" DIAM. | ISSUE 9-23-38 | J.W. |
| KIND | C.R. STEEL | CHANGED | |
| SHAPE | ROD | " | |
| FINISH | CAD. #23 | " | |
| TEMP. | | " | |
| PATT. | | " | |

**TITLE:** FISCHER MOD. "G" SHOCKPROOF FLUOROSCOPE SCREEN FORK LOCK SHAFT (MINSKIER)

H. G. FISCHER & CO.
2335 WABANSIA AVE.
CHICAGO, ILL.

CAT. NO.

PART NO. 11366 1/4

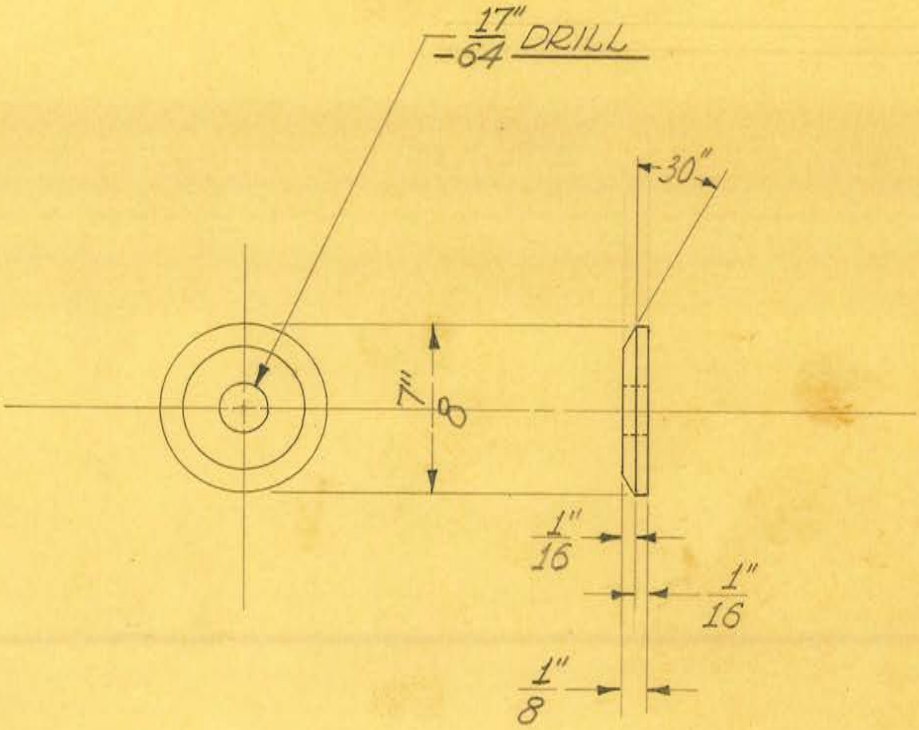


2 REQUIRED

OBSOLETE

| | | | |
|---|---|---|---|
| SIZE | 7/8" DIAM. | ISSUE 9-23-38 | J.W. |
| KIND | BRASS ROD | CHANGED | |
| SHAPE | | " | |
| FINISH | CAD. #23 | " | |
| TEMP. | | " | |
| PATT. | | " | |

**TITLE:** FISCHER MOD. "G" SHOCKPROOF FLUOROSCOPE SCREEN FORK LOCK SHAFT WASHER (MINSKIER)

H. G. FISCHER & CO.
2338 WABANSIA AVE.
CHICAGO, ILL.

CAT. NO.

PART NO. 11366 1/2

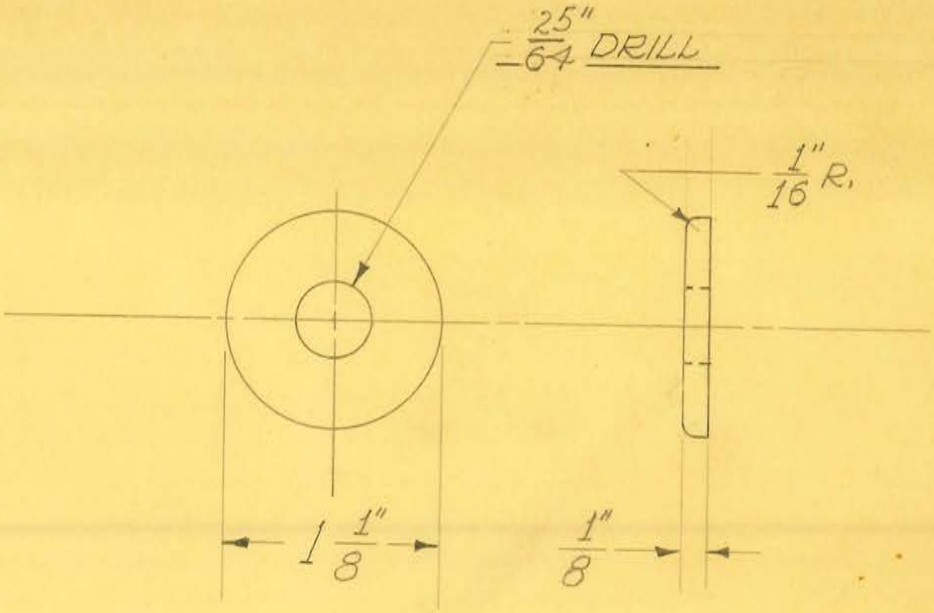


1 REQUIRED

OBSOLETE

Obsolete

| | | | | |
|---|---|---|---|---|
| SIZE | 1 1/8" DIAM. | ISSUE 3-2-38 | J.W. | TITLE: FISCHER MOD. "G" SHOCKPROOF FLUOROSCOPE TRANSF. SWIVEL SUPP. STUD-WASHER |
| KIND | C.R. STEEL | CHANGED | | |
| SHAPE | ROD | " | | |
| FINISH | CAD. #23 | " | | |
| TEMP. | | " | | |
| PATT. | | " | | |

H. G. FISCHER & CO.
2335 WABANSIA AVE.
CHICAGO, ILL.

CAT. NO.

PART NO. 11371

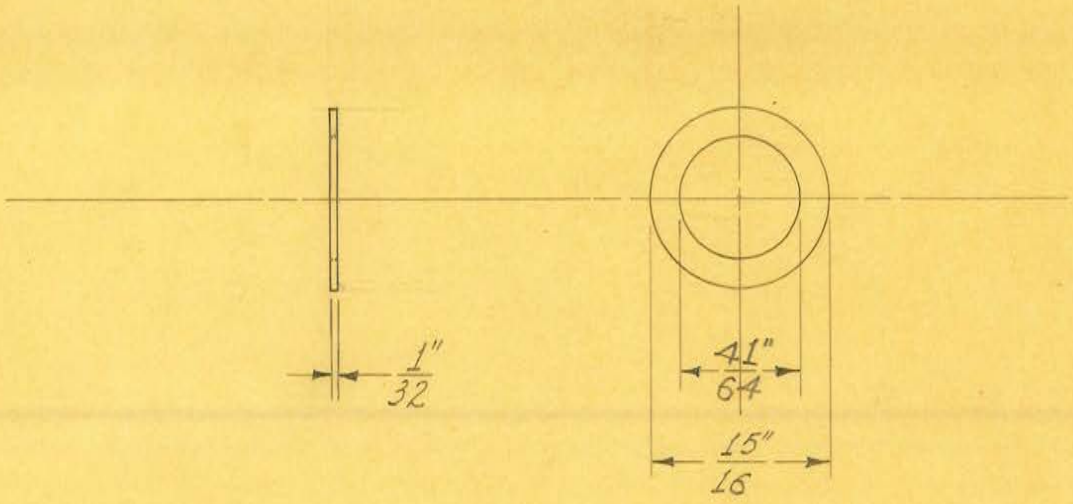


2 REQUIRED

OBSOLETE

| | | | |
|---|---|---|---|
| SIZE | 15/16" DIAM. | ISSUE 7-15-38 | J.W. |
| KIND | C.R. STEEL | CHANGED | |
| SHAPE | ROD | " | |
| FINISH | CAD. #23 | " | |
| TEMP. | | " | |
| PATT. | | " | |

**TITLE:** FISCHER MOD. "G" SHOCKPROOF FLUOROSCOPE SCREEN FRAME SUPPORT ARM CLAMP WASHER

H. G. FISCHER & CO.
2335 WABANSIA AVE.
CHICAGO, ILL.

CAT. NO.

PART NO. 11372 1/2

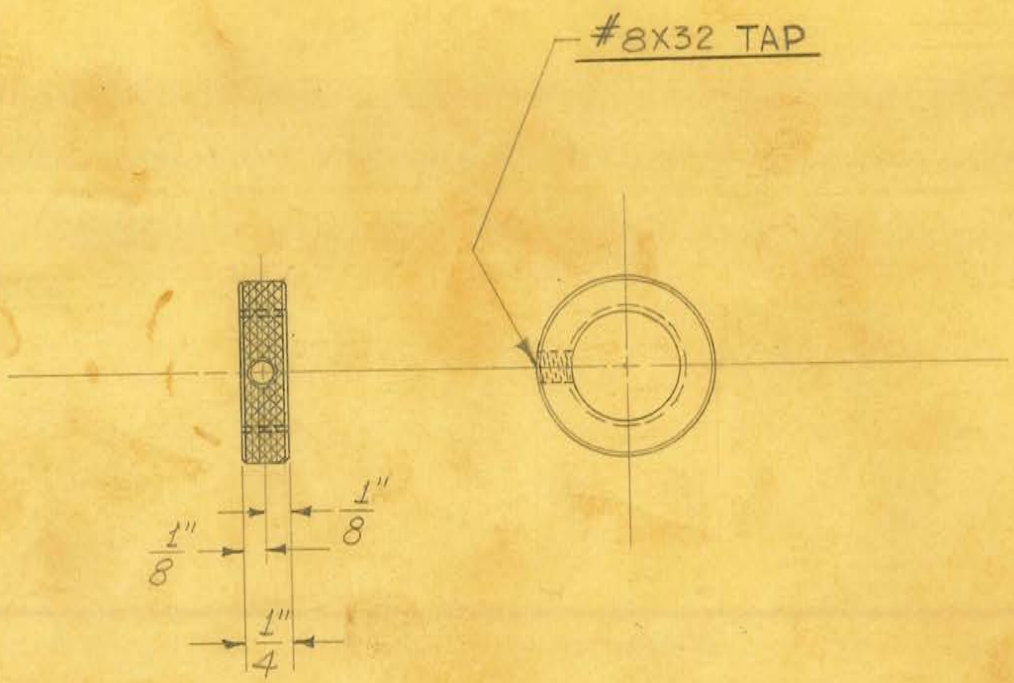


2 REQUIRED

OBSOLETE

Obsolete

| | | | |
|---|---|---|---|
| [redacted] | FROM | ISSUE 7-18-38 | J.W. |
| [redacted] | 14497 | CHANGED | |
| SHAPE | | " | |
| FINISH | CAD. #23 | " | |
| TEMP. | | " | |
| PATT. | | " | |

**TITLE:** FISCHER MOD. "G" SHOCKPROOF FLUOROSCOPE SCREEN FRAME SUPPORT ARM ADJ. NUT

H. G. FISCHER & CO.
2335 WABANSIA AVE.
CHICAGO, ILL.

CAT. NO.

PART NO. 11373 1/2

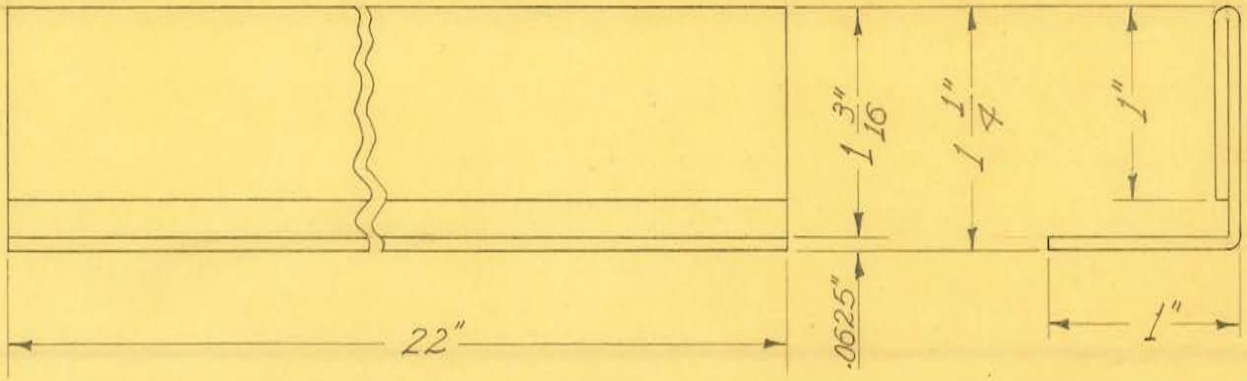


1 REQUIRED

OBSOLETE

Obsolete

| | | | |
|---|---|---|---|
| SIZE | #16GA. (.0625") | ISSUE 3-7-38 | J.W. |
| KIND | C.R. STEEL | CHANGED | |
| SHAPE | SHEET | " | |
| FINISH | | " | |
| TEMP. | | " | |
| PATT. | | " | |

**TITLE:**
FISCHER MOD. "G" SHOCKPROOF FLUOROSCOPE
SIDE COVER TIE ANGLE - REAR-BOTTOM

H. G. FISCHER & CO.
2335 WABANSIA AVE.
CHICAGO, ILL.

CAT. NO.

PART NO. 11381

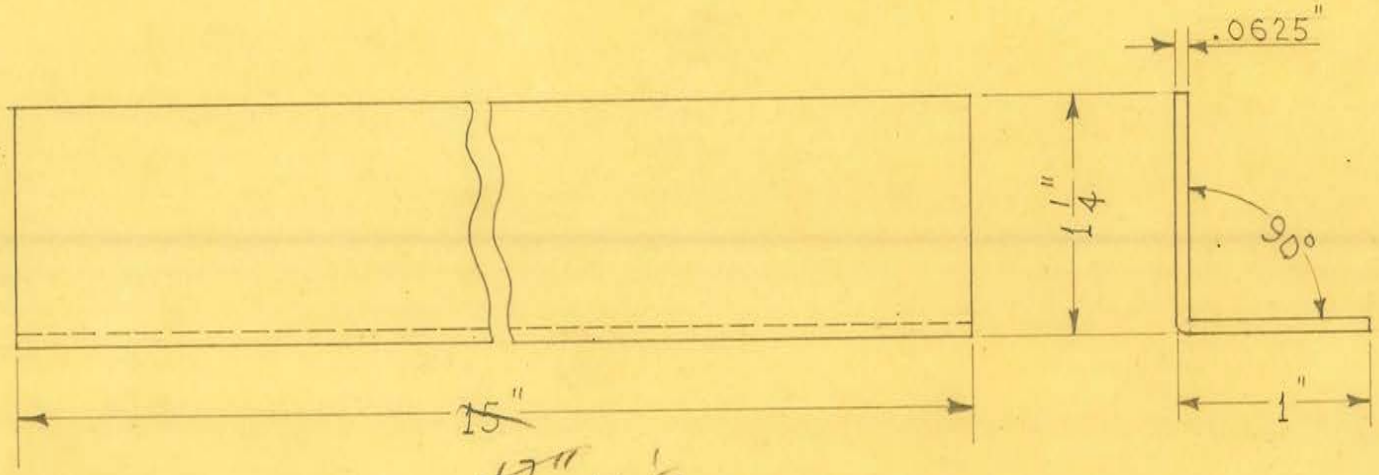


1 REQUIRED

OBSOLETE

Obsolete
REDRAWN

| | | | |
|---|---|---|---|
| SIZE | #16 U.S.S.GA.(.0625) | ISSUE 3-16-38 | A.E. |
| KIND | C.R. STEEL | CHANGED | |
| SHAPE | SHEET | " | |
| FINISH | | " | |
| TEMP. | | " | |
| PATT. | | " | |

**TITLE:** FISCHER MOD."G" SHOCKPROOF FLUOROSCOPE
FRONT COVER PLATE ANGLE - BOTTOM

H. G. FISCHER & CO.
2335 WABANSIA AVE.
CHICAGO, ILL.

CAT. NO.

PART NO. 11382

DUPLICATE – ORIG LOST

TITLE: WASHER, 3/8 x 1" x .083 FLAT

**H. G. FISCHER, INC.**
**FRANKLIN PARK, ILLINOIS**

PART NO. 11387

REVISION

| DATE: | DR. BY: | CH'K'D: |
|---|---|---|
| 6-27-78 | SEIWERTH | |

FINISH OR COLOR: SEE SPEC.

SCALE: —

MATERIAL: SEE SPEC.

TOLERANCES UNLESS OTHERWISE SPECIFIED

| | |
|---|---|
| .X | ± .030 |
| .XX | ± .010 |
| .XXX | ± .005 |
| ANGULAR | ± 1/2° |

11387

| USED ON | QTY. |
|---|---|
| | |
| | |
| | |

WASHER TYPE 3/8 FLAT

INSIDE DIA. .43

OUTSIDE DIA. 1.00

THICKNESS .083

MATERIAL STEEL

FINISH CAD. # 123

ECO-1711
OBSOLETE
6/20/79
P.P.

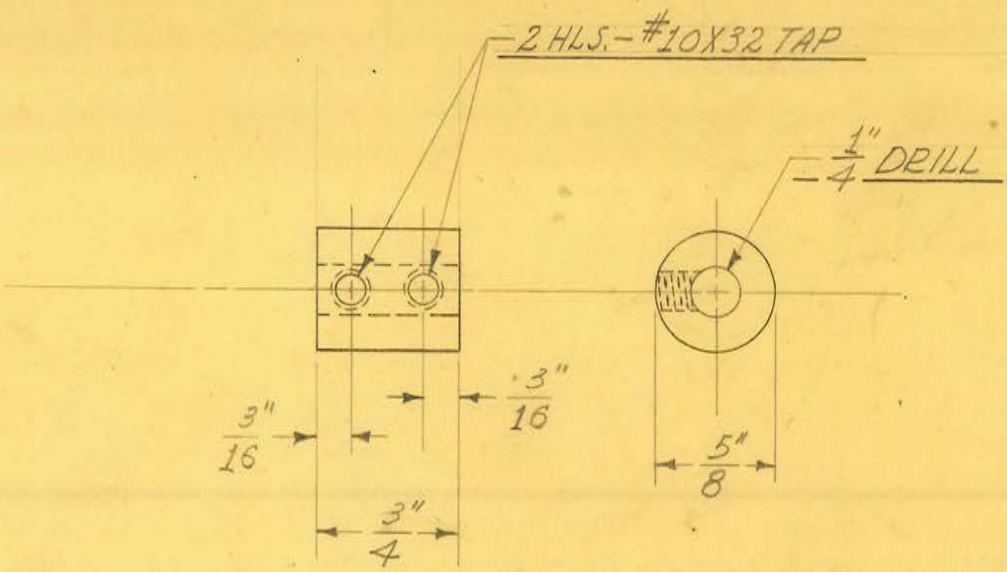


1 REQUIRED

OBSOLETE

Obsolete

| | | | |
|---|---|---|---|
| SIZE | 5/8" DIAM. | ISSUE 2-28-38 | J.W. |
| KIND | C.R. STEEL | CHANGED | |
| SHAPE | ROD | " | |
| FINISH | CAD. #23 | " | |
| TEMP. | | " | |
| PATT. | | " | |

**TITLE:** FISCHER MOD. "G" SHOCKPROOF FLUOROSCOPE RHEOSTAT REGULATING COUPLING

H. G. FISCHER & CO.
2335 WABANSIA AVE.
CHICAGO, ILL.

CAT. NO.

PART NO. 11388

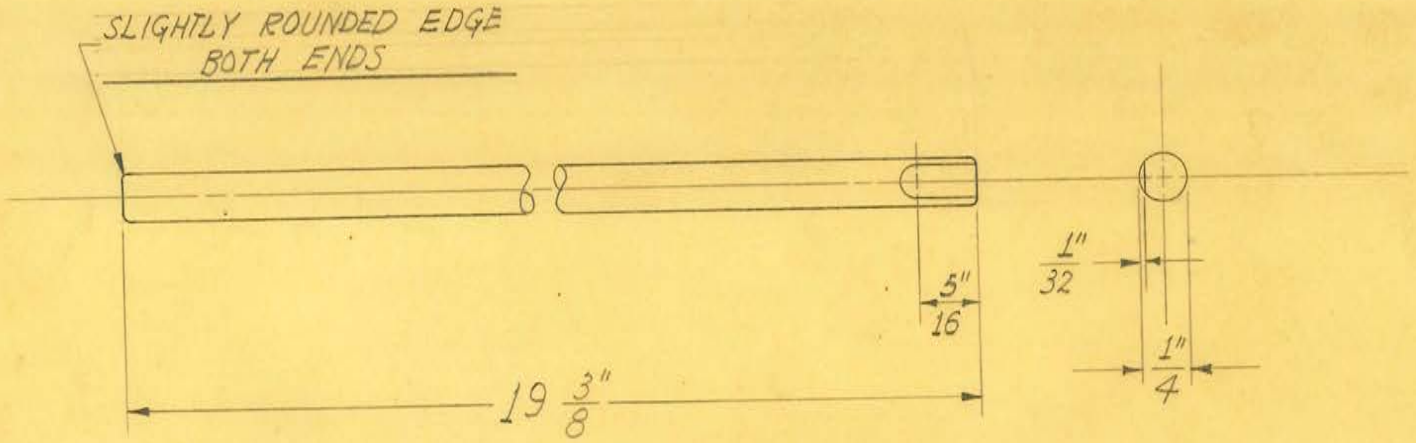


1 REQUIRED

OBSOLETE

Obsolete

| | | | |
|---|---|---|---|
| SIZE | 1/4" DIAM. | ISSUE 4-18-38 | J.W. |
| KIND | C.R. STEEL | CHANGED | |
| SHAPE | ROD | " | |
| FINISH | CAD. #23 | " | |
| TEMP. | | " | |
| PATT. | | " | |

**TITLE:** FISCHER MOD. "G" SHOCKPROOF FLUOROSCOPE RHEOSTAT REGULATING ROD

H. G. FISCHER & CO.
2335 WABANSIA AVE.
CHICAGO, ILL.

CAT. NO.

PART NO. 11389

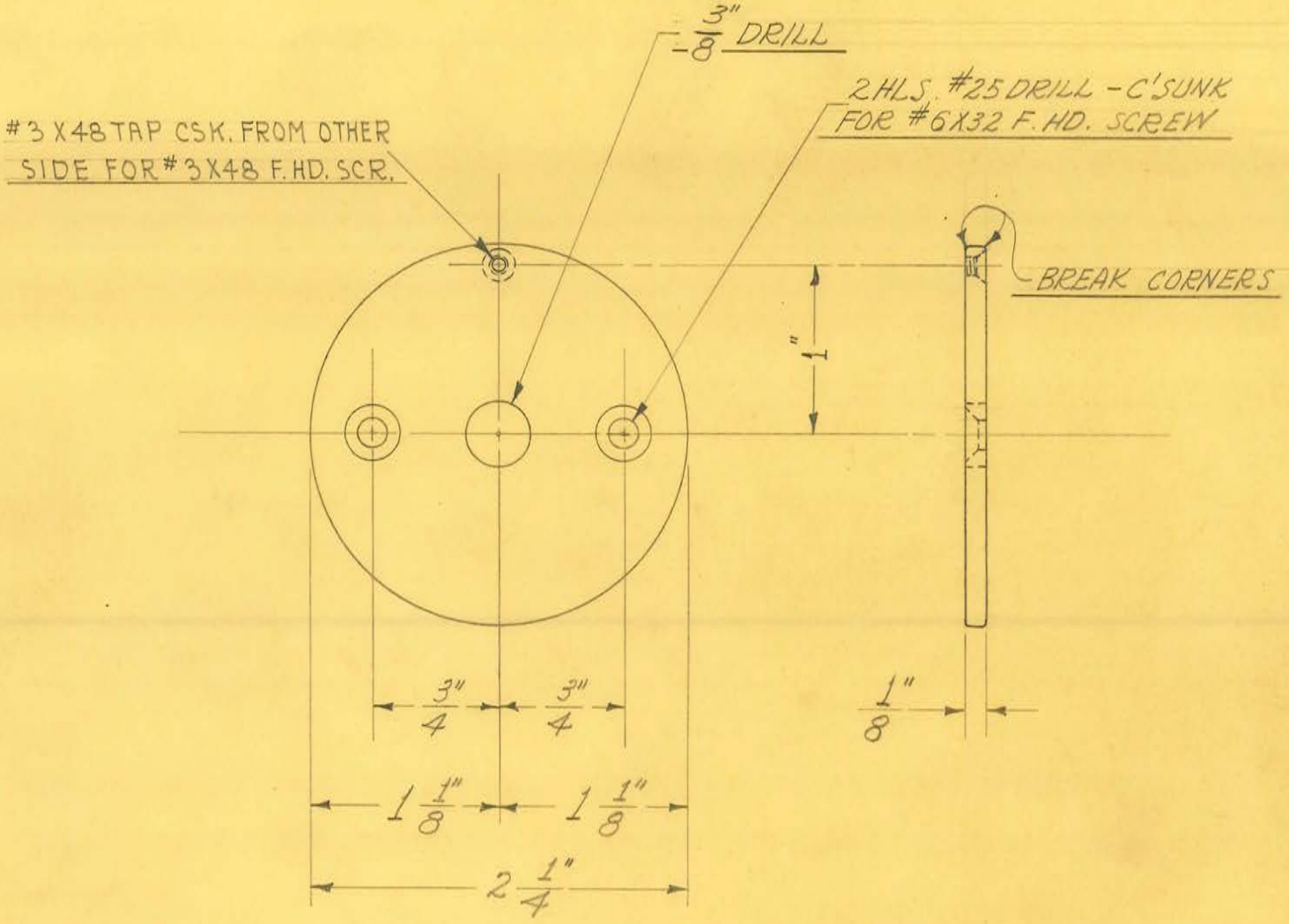


1 REQUIRED

OBSOLETE

obsolete

| | | | |
|---|---|---|---|
| SIZE | 1/8" SHEET | ISSUE 2-28-38 | J.W. |
| KIND | BAKELITE | CHANGED | |
| SHAPE | | " | |
| FINISH | | " | |
| TEMP. | | " | |
| PATT. | | " | |

**TITLE:**
FISCHER. MOD. "G" SHOCKPROOF FLUOROSCOPE RHEOSTAT MOUNTING DISC

H. G. FISCHER & CO.
2335 WABANSIA AVE.
CHICAGO, ILL.

CAT. NO.

PART NO. 11390

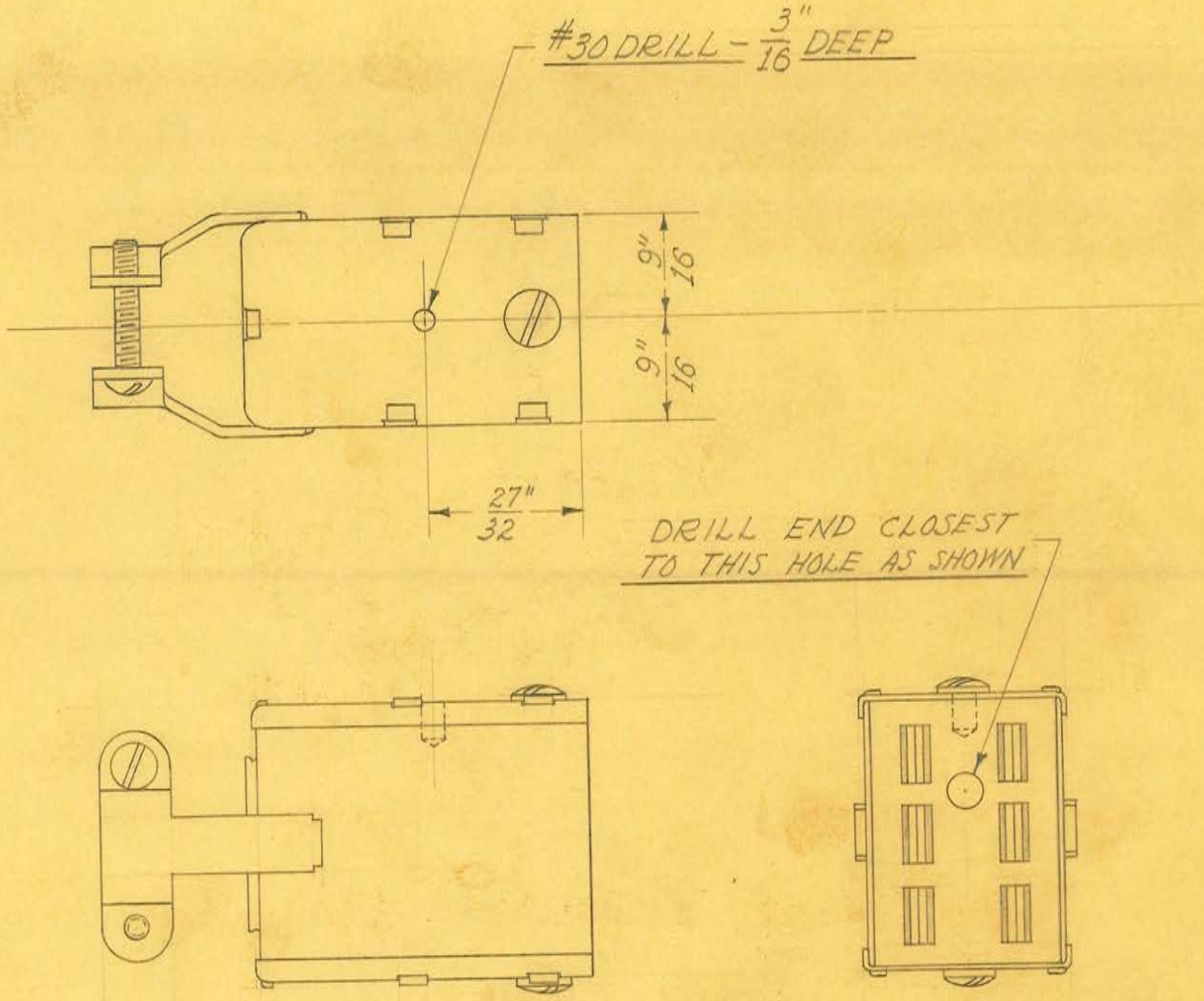


OBSOLETE

FROM PCE. # 11393G

1 REQUIRED

obsolete

| | | | |
|---|---|---|---|
| SIZE | | ISSUE 8-17-38 | J.W. |
| KIND | | CHANGED | |
| SHAPE | | " | |
| FINISH | | " | |
| TEMP. | | " | |
| PATT. | | " | |

**TITLE:** FISCHER MOD. "G" SHOCKPROOF FLUOROSCOPE LINE CORD - FEMALE PLUG - (DRILLED)

H. G. FISCHER & CO.
2335 WABANSIA AVE.
CHICAGO, ILL.

CAT. NO.

PART NO. 11393GF

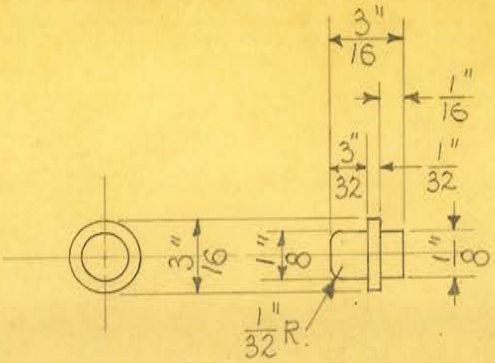


SCALE ~ 1" = 1/2"

1 REQUIRED

3/16" DIA. C.R. STEEL

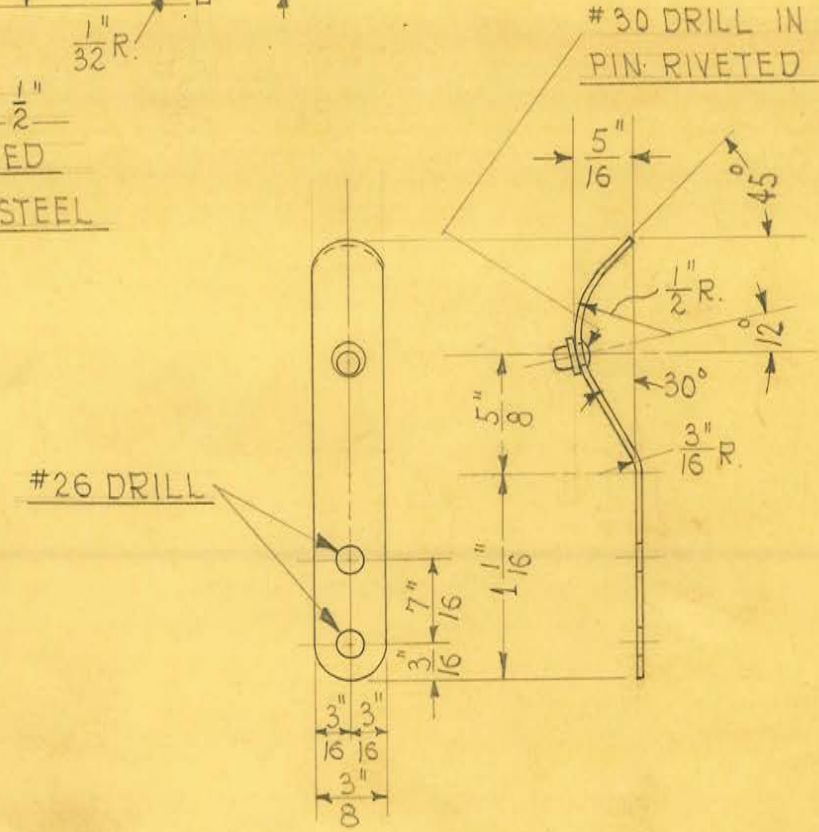


SCALE ~ FULL SIZE

1 REQUIRED

OBSOLETE

obsolete

| | | | |
|---|---|---|---|
| SIZE | .025 SHEET | ISSUE 3-15-38 | N.E. |
| KIND | PHOS. BRONZE | CHANGED | |
| SHAPE | | " | |
| FINISH | CAD. #23 | " | |
| TEMP. | | " | |
| PATT. | | " | |

**TITLE:** FISCHER MOD. "G" SHOCKPROOF FLUOROSCOPE-FT. SW. & LINE FEMALE PLUG CLIP

H. G. FISCHER & CO.
2335 WABANSIA AVE.
CHICAGO, ILL.

CAT. NO.

PART NO. 11394G

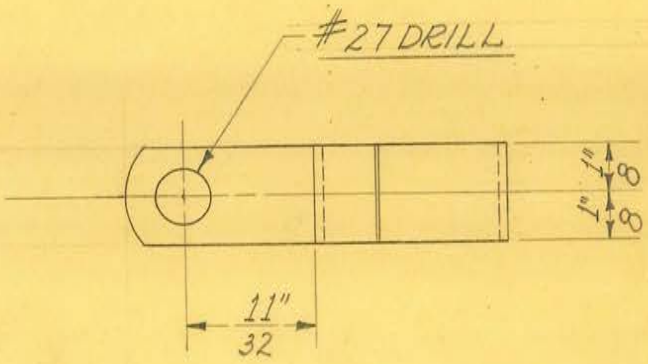


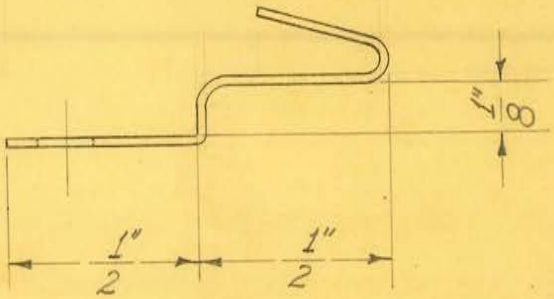


SCALE ÷ DOUBLE SIZE

2 REQUIRED

OBSOLETE

obsolete

| | | | |
|---|---|---|---|
| SIZE | | ISSUE 3-10-38 | J.W. |
| KIND | FROM 11399 | CHANGED | |
| SHAPE | | " | |
| FINISH | | " | |
| TEMP. | | " | |
| PATT. | | " | |

**TITLE:** FISCHER MOD. "G" SHOCKPROOF FLUOROSCOPE
50 OHMS – RESISTOR BRACKET

H. G. FISCHER & CO.
2335 WABANSIA AVE.
CHICAGO, ILL.

CAT. NO.

PART NO. 11399F

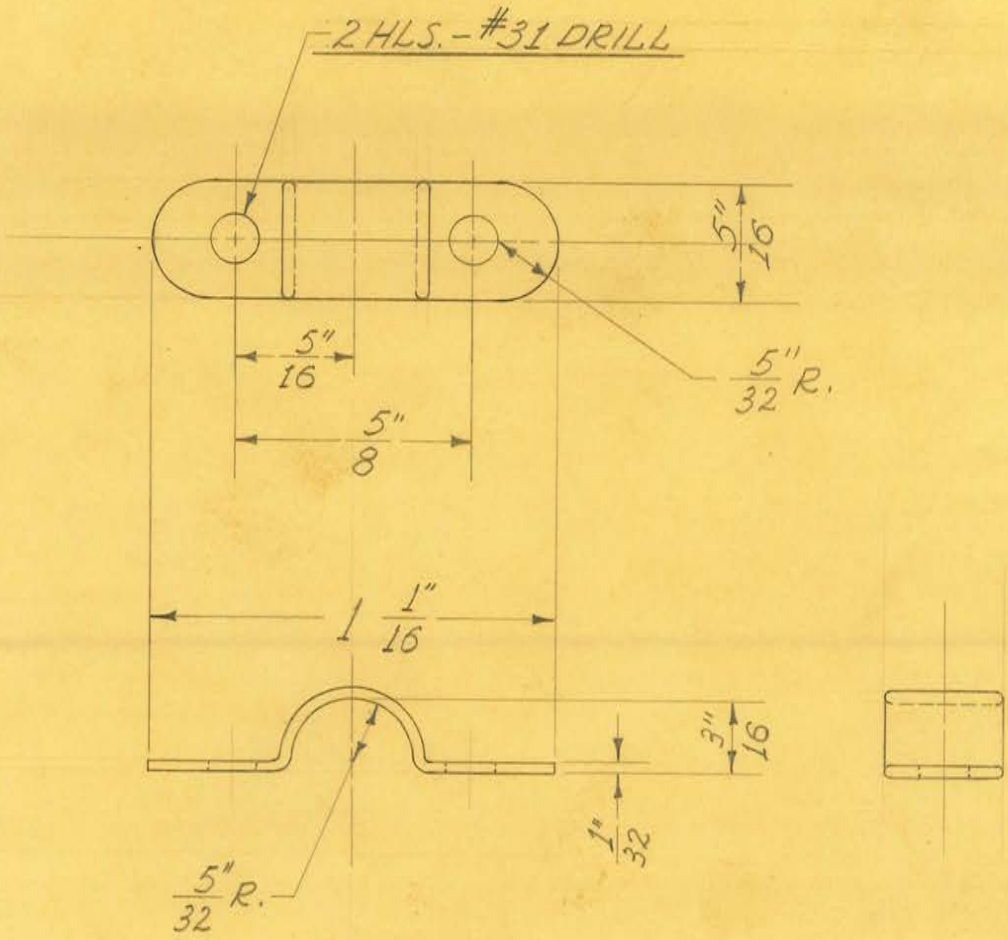


SCALE ~ DOUBLE SIZE

1 REQUIRED

OBSOLETE

obsolete

| | | | | |
|---|---|---|---|---|
| SIZE | 5/16" X 1/32" | ISSUE 3-24-38 | J.W. | **TITLE:** FISCHER MOD. "G" SHOCKPROOF FLUOROSCOPE FILAMENT CORD STRAIN RELIEF |
| KIND | FLAT WIRE | CHANGED | | |
| SHAPE | | " | | |
| FINISH | CAD. #23 | " | | |
| TEMP. | | " | | |
| PATT. | | " | | |

H. G. FISCHER & CO.
2335 WABANSIA AVE.
CHICAGO, ILL.

CAT. NO.

PART NO. 11401

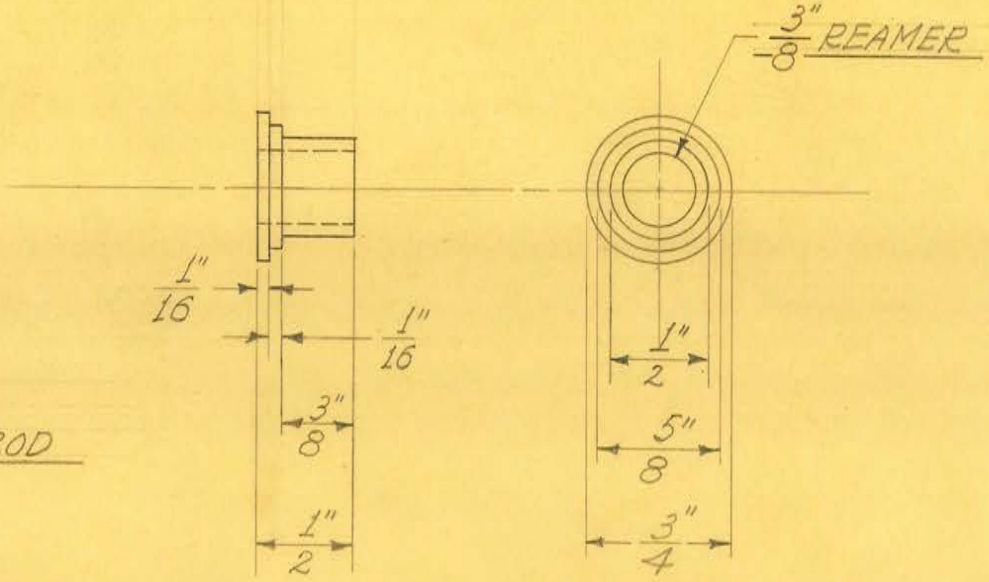


MATERIAL:
3/4" DIAM. BRASS ROD

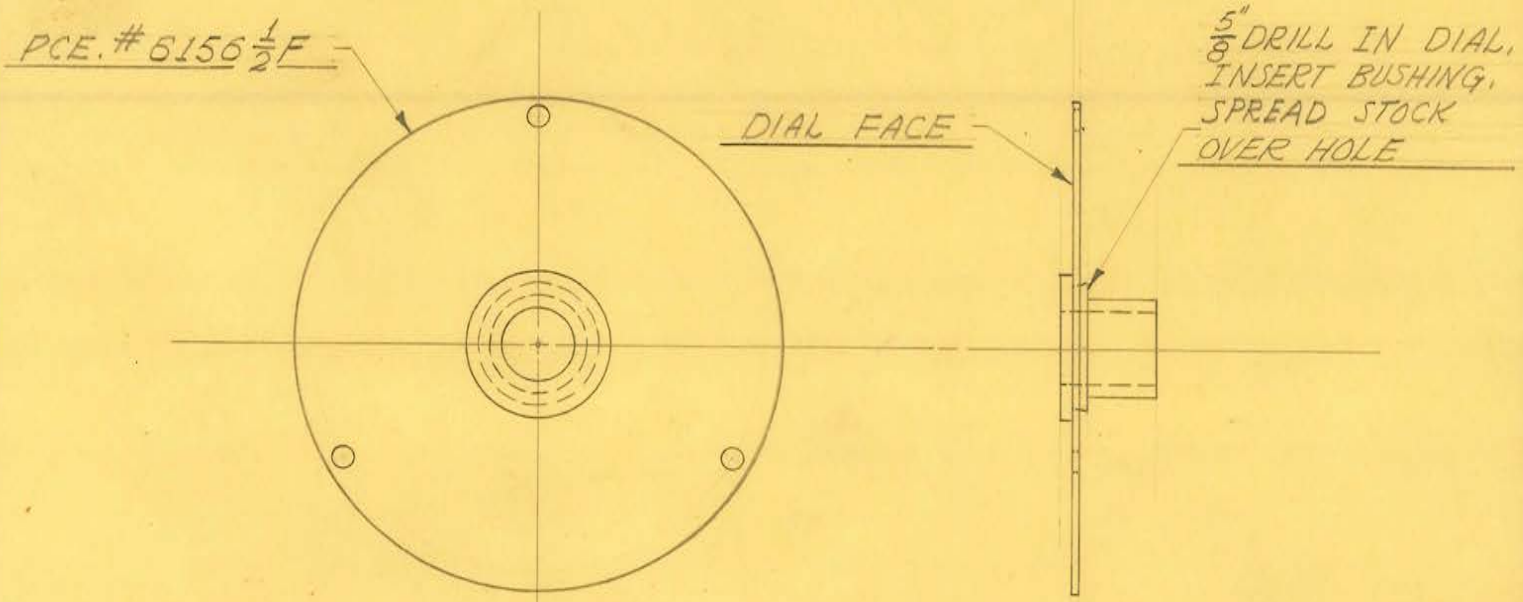


OBSOLETE

1 REQUIRED

obsolete

| | | | |
|---|---|---|---|
| SIZE | | ISSUE 4-5-38 | J.W. |
| KIND | | CHANGED | |
| SHAPE | | " | |
| FINISH | | " | |
| TEMP. | | " | |
| PATT. | | " | |

**TITLE:**
FISCHER MOD. "G" SHOCKPROOF FLUOROSCOPE RHEOSTAT DIAL ASSEMBLY

H. G. FISCHER & CO.
2335 WABANSIA AVE.
CHICAGO, ILL.

CAT. NO.

PART NO. 11410G

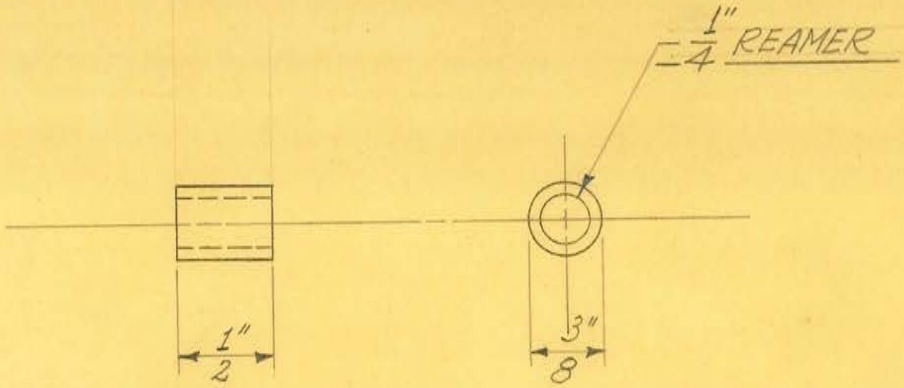


1 REQUIRED.

OBSOLETE

obsolete

| | | | |
|---|---|---|---|
| SIZE | 3/8" DIAM. | ISSUE 4-4-38 | J.W. |
| KIND | BAKELITE ROD | CHANGED | |
| SHAPE | | " | |
| FINISH | | " | |
| TEMP. | | " | |
| PATT. | | " | |

**TITLE:** FISCHER MOD. "G" SHOCKPROOF FLUOROSCOPE RHEOSTAT REGULATING ROD BUSHING

H. G. FISCHER & CO.
2335 WABANSIA AVE.
CHICAGO, ILL.

CAT. NO.

PART NO. 11411

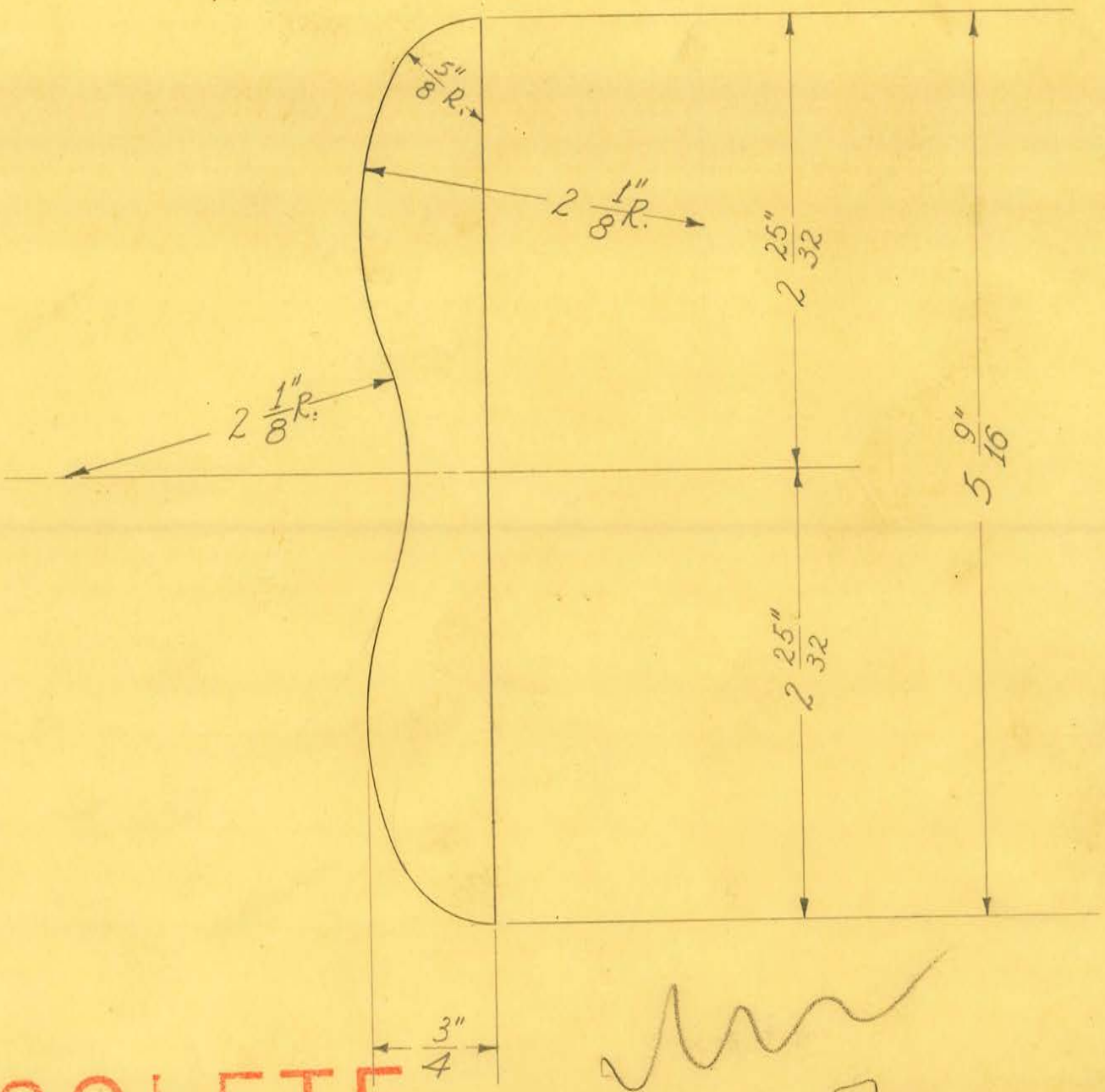


OBSOLETE

3.0

1 REQUIRED

| | | | |
|---|---|---|---|
| SIZE | | ISSUE 4-4-38 | J.W. |
| KIND | PIRAMID | CHANGED | |
| SHAPE | RUBBER MATT | " | |
| FINISH | | " | |
| TEMP. | | " | |
| PATT. | | " | |

**TITLE:** FISCHER MOD. "G" SHOCKPROOF FLUOROSCOPE FOOT SWITCH - BASE PAD

H. G. FISCHER & CO.
2335 WABANSIA AVE.
CHICAGO, ILL.

CAT. NO.

PART NO. 11421

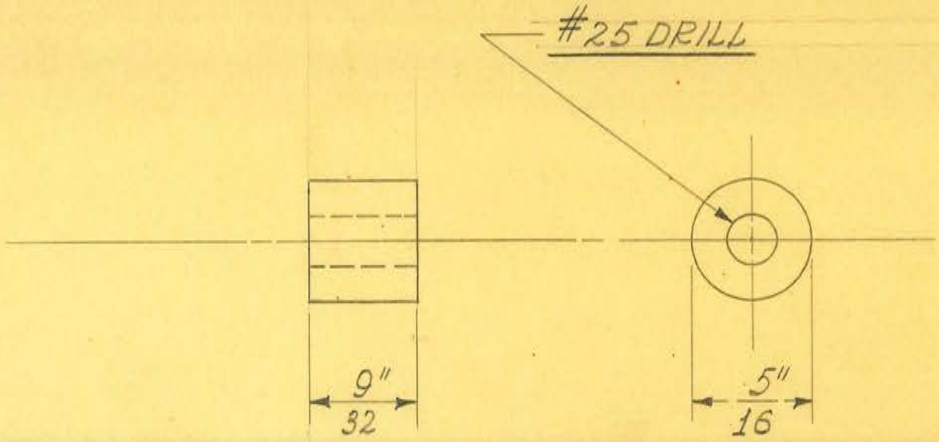


SCALE ~ 2 DIAMETERS

1 REQUIRED

OBSOLETE

Obsolete

| | | | |
|---|---|---|---|
| SIZE | 5/16" DIAM. | ISSUE 9-15-38 | J.W. |
| KIND | BRASS ROD | CHANGED | |
| SHAPE | | " | |
| FINISH | | " | |
| TEMP. | | " | |
| PATT. | | " | |

**TITLE:** FISCHER MOD. "M" SHORT WAVE-OSCILLATING COIL TUNING CONDENSER SUPPORT SPACER

H. G. FISCHER & CO.
2335 WABANSIA AVE.
CHICAGO, ILL.

CAT. NO.

PART NO. 12092

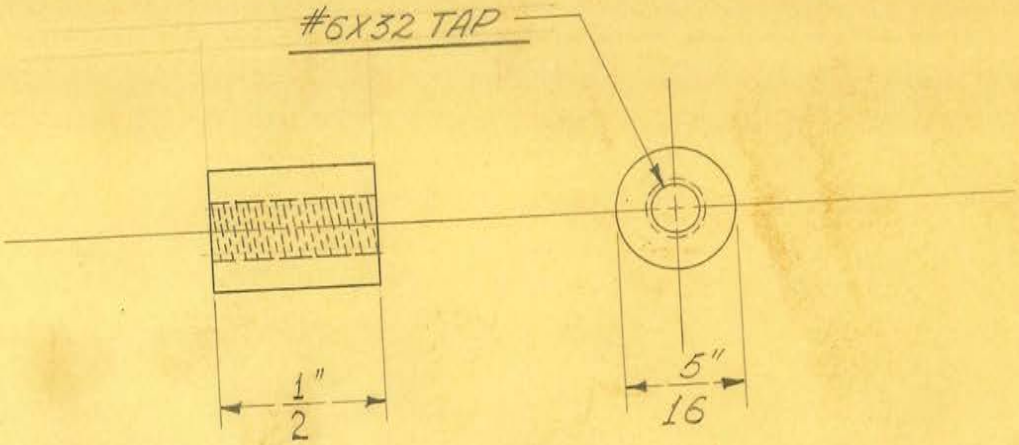


SCALE ÷ 2 DIAMETERS

1 REQUIRED

OBSOLETE

obsolete

| | | | | |
|---|---|---|---|---|
| SIZE | 5/16" DIAM. | ISSUE 10-5-38 | J.W. | TITLE: FISCHER MOD. "M" SHORT WAVE-OSCILLATING COIL TUNING CONDENSER SUPPORT SPACER |
| KIND | BRASS ROD | CHANGED | | |
| SHAPE | | " | | |
| FINISH | | " | | |
| TEMP. | | " | | |
| PATT. | | " | | |

H. G. FISCHER & CO.
2335 WABANSIA AVE.
CHICAGO, ILL.

CAT. NO.

PART NO. 12092A

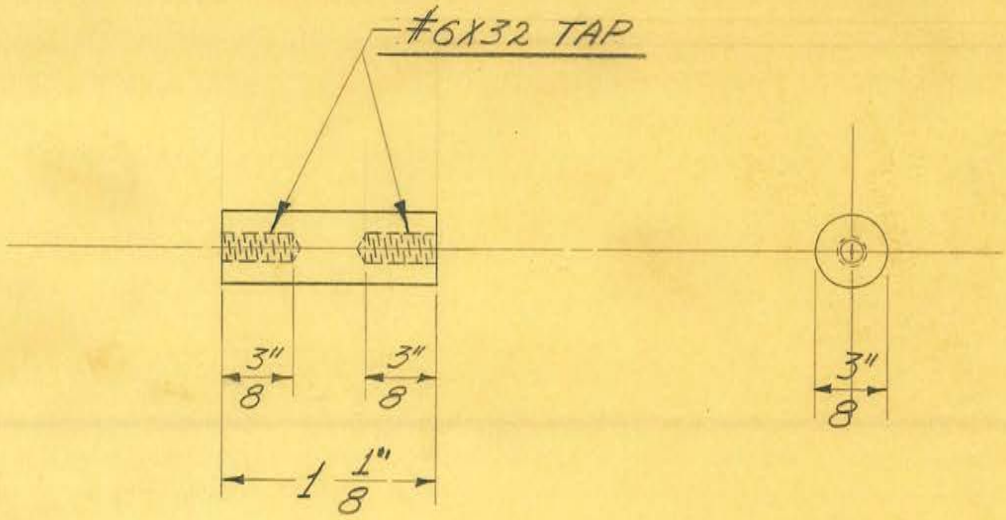


2 REQUIRED

OBSOLETE

Obsolete

| | | | |
|---|---|---|---|
| SIZE | 3/8" DIAM. | ISSUE 2-6-39 | J.W. |
| KIND | BAKELITE | CHANGED | |
| SHAPE | ROD | " | |
| FINISH | | " | |
| TEMP. | | " | |
| PATT. | | " | |

**TITLE:** FISCHER MOD. "M" SHORT WAVE-OSCILLATING COIL TUNING CONDENSER SUPPORT SPACER

H. G. FISCHER & CO.
2335 WABANSIA AVE.
CHICAGO, ILL.

CAT. NO.

PART NO. 12092B

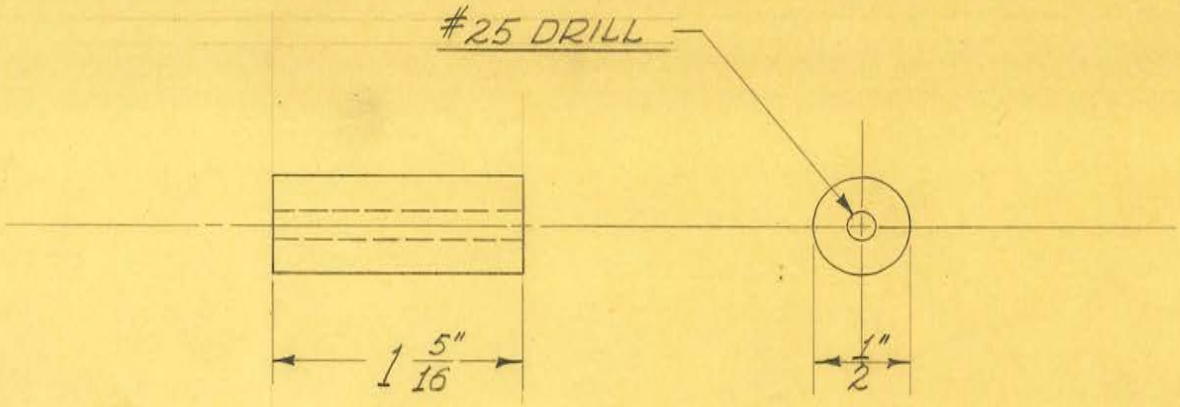


2 REQUIRED

OBSOLETE obsolete

| | | | |
|---|---|---|---|
| SIZE | 1/2" DIAM. | ISSUE 10-6-38 | J.W. |
| KIND | BRASS ROD | CHANGED | |
| SHAPE | | " | |
| FINISH | CAD. #23 | " | |
| TEMP. | | " | |
| PATT. | | " | |

**TITLE:** FISCHER MOD "M" SHORT WAVE-OSCILLATING COIL TUNING CONDENSER SUPP. SPACER -LONG

H. G. FISCHER & CO.
2335 WABANSIA AVE.
CHICAGO, ILL.

CAT. NO.

PART NO. 12097

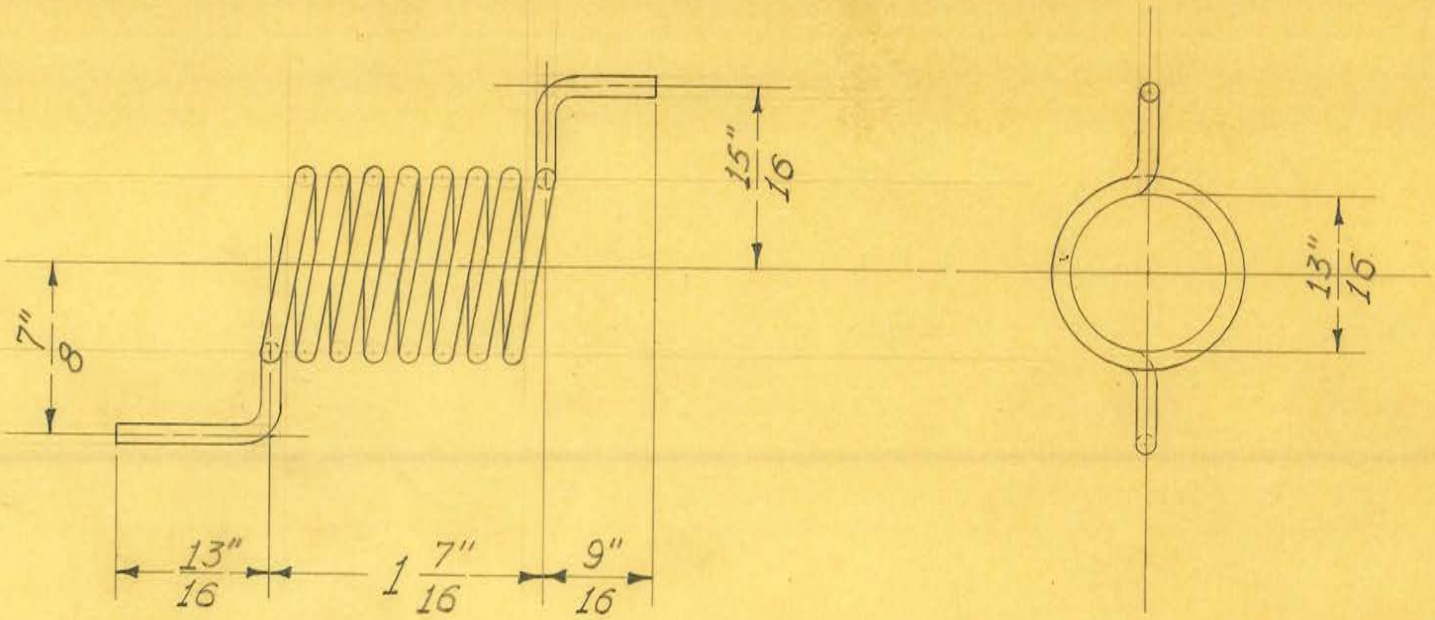


7½ TURNS

2 REQUIRED

OBSOLETE

obsolete

| | | | | |
|---|---|---|---|---|
| SIZE | #10 TINNED | ISSUE 12-5-38 | J.W. | TITLE: FISCHER MOD. "M" SHORT WAVE PATIENT'S TUNING COIL |
| KIND | COPPER WIRE | CHANGED | | |
| SHAPE | | " | | |
| FINISH | | " | | |
| TEMP. | | " | | |
| PATT. | | " | | |

H. G. FISCHER & CO.
2335 WABANSIA AVE.
CHICAGO, ILL.

CAT. NO.

PART NO. 12098

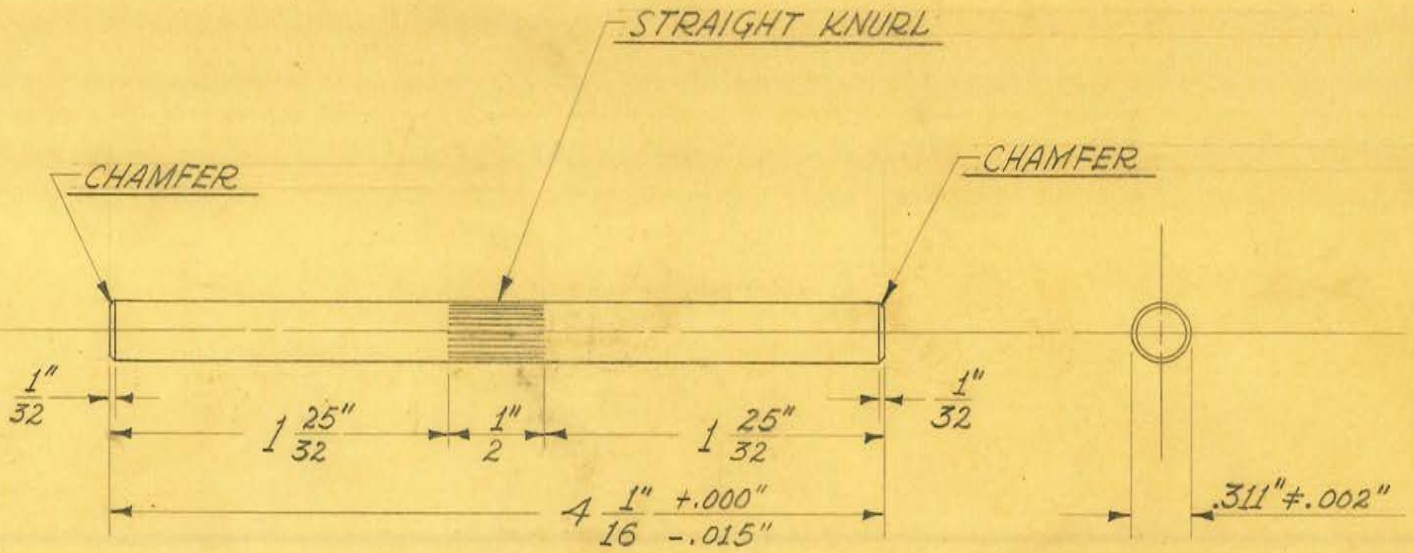


1 REQUIRED

OBSOLETE obsolete

| | | | | |
|---|---|---|---|---|
| SIZE | 5/16" DIAM. | ISSUE 10-4-38 | J.W. | **TITLE:** SHORT WAVE AIR SPACE ELECTRODE ADJUSTING SCREW-INSERT |
| KIND | BRASS ROD | CHANGED | | |
| STATE | SELECT STOCK. | " | | |
| FINISH | | " | | |
| TEMP. | | " | | |
| PATT. | | " | | |

H. G. FISCHER & CO.
2335 WABANSIA AVE.
CHICAGO, ILL.

CAT. NO.

PART NO. 12111

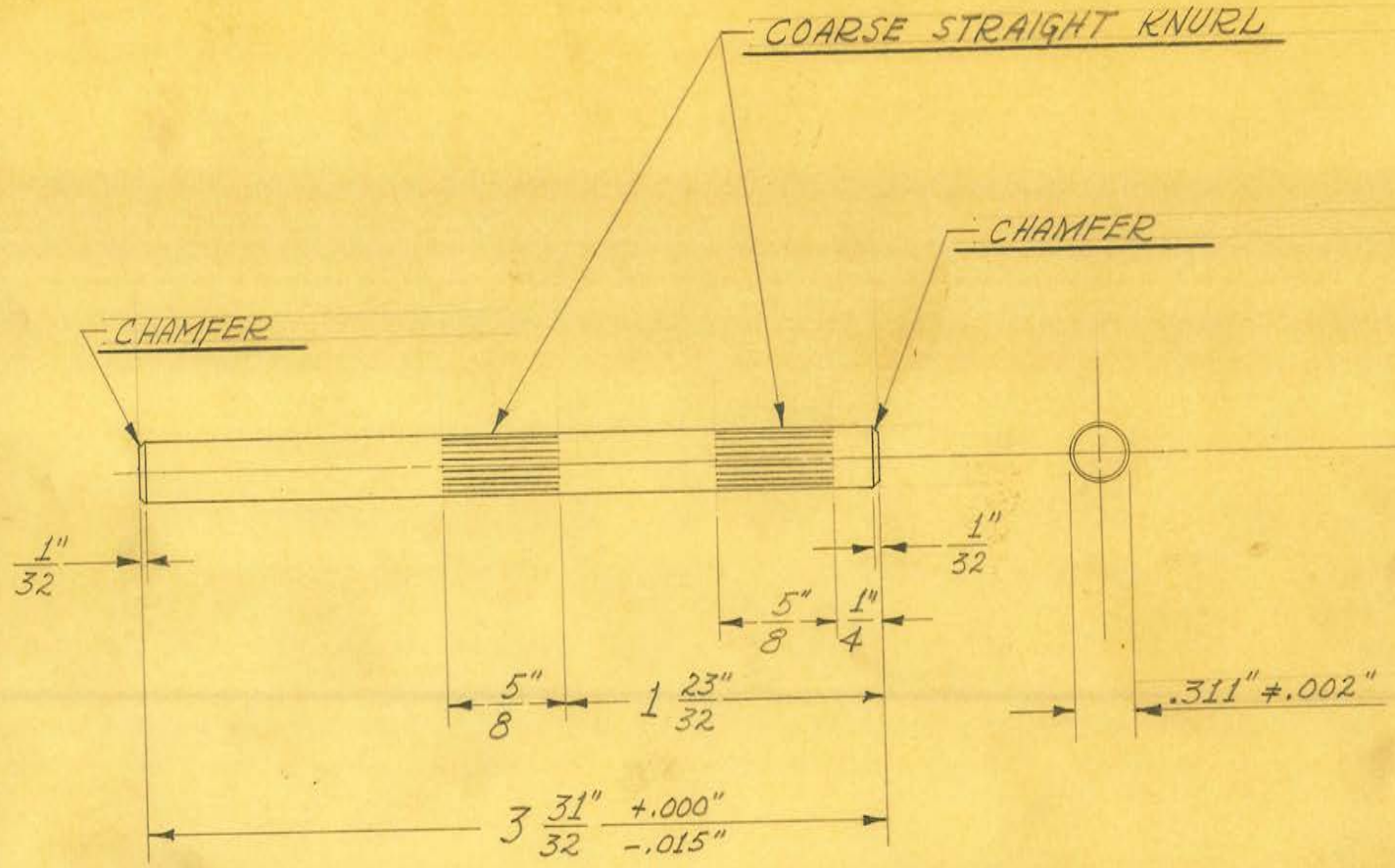


1 REQUIRED

OBSOLETE

| | | | |
|---|---|---|---|
| SIZE | 5/16" DIAM. | ISSUE 11-22-38 | J.W. |
| KIND | BRASS ROD | CHANGED | |
| ~~SHAPE~~ | SELECT STOCK | " | |
| FINISH | | " | |
| TEMP. | | " | |
| PATT. | | " | |

**TITLE:** SHORT WAVE AIR SPACED ELECTRODE ADJUSTING SCREW-INSERT

H. G. FISCHER & CO.
2335 WABANSIA AVE.
CHICAGO, ILL.

CAT. NO.

PART NO. 12111

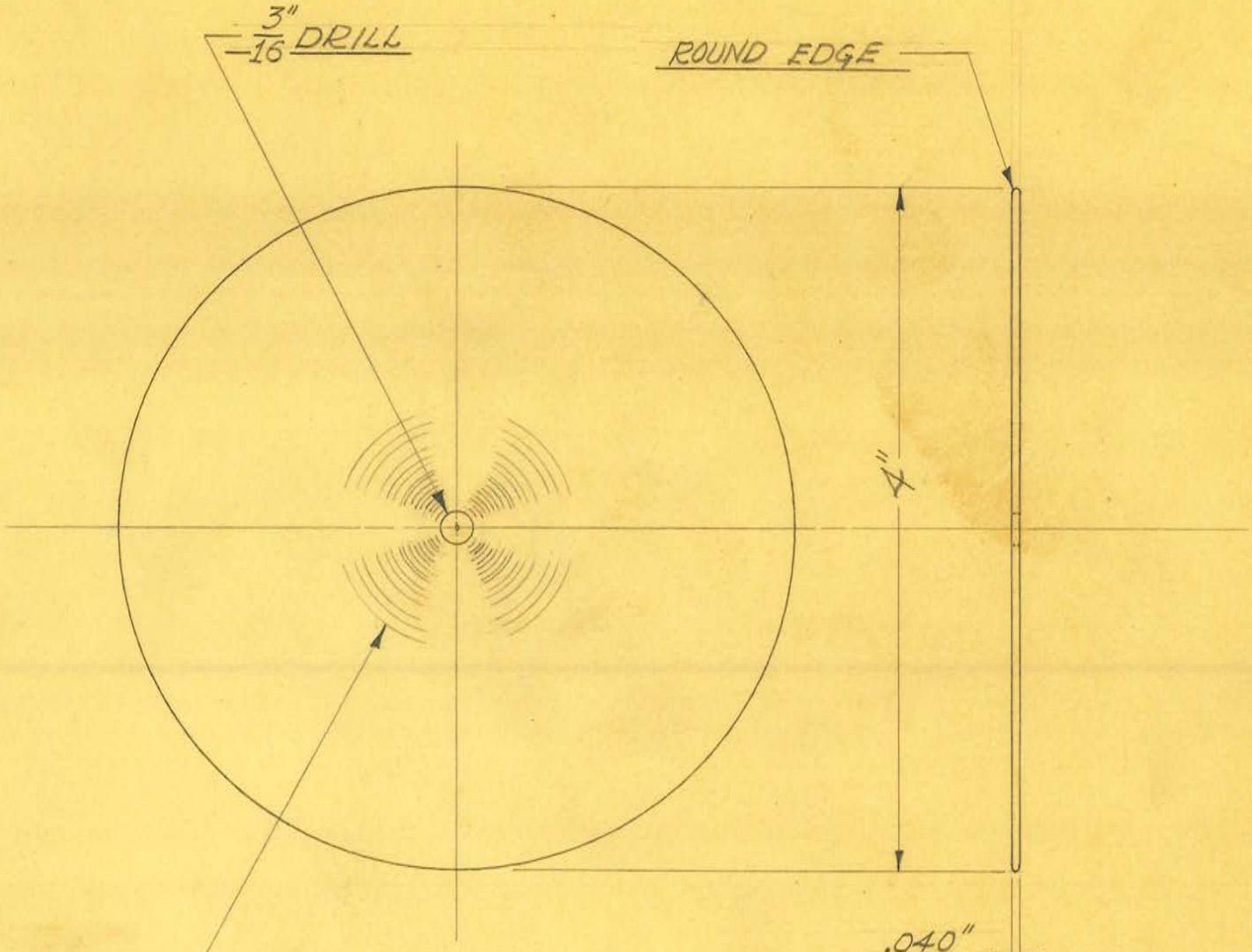


OBSOLETE

2 REQUIRED

| | | | |
|---|---|---|---|
| SIZE | .040" SHEET | ISSUE 11-2-38 | J.W. |
| KIND | ALUMINUM | CHANGED | |
| SHAPE | | " | |
| FINISH | | " | |
| TEMP. | | " | |
| PATT. | | " | |

**TITLE:** SHORT WAVE AIR SPACED ELECTRODE DISC -4"

H. G. FISCHER & CO.
2335 WABANSIA AVE.
CHICAGO, ILL.

CAT. NO.

PART NO. 12112

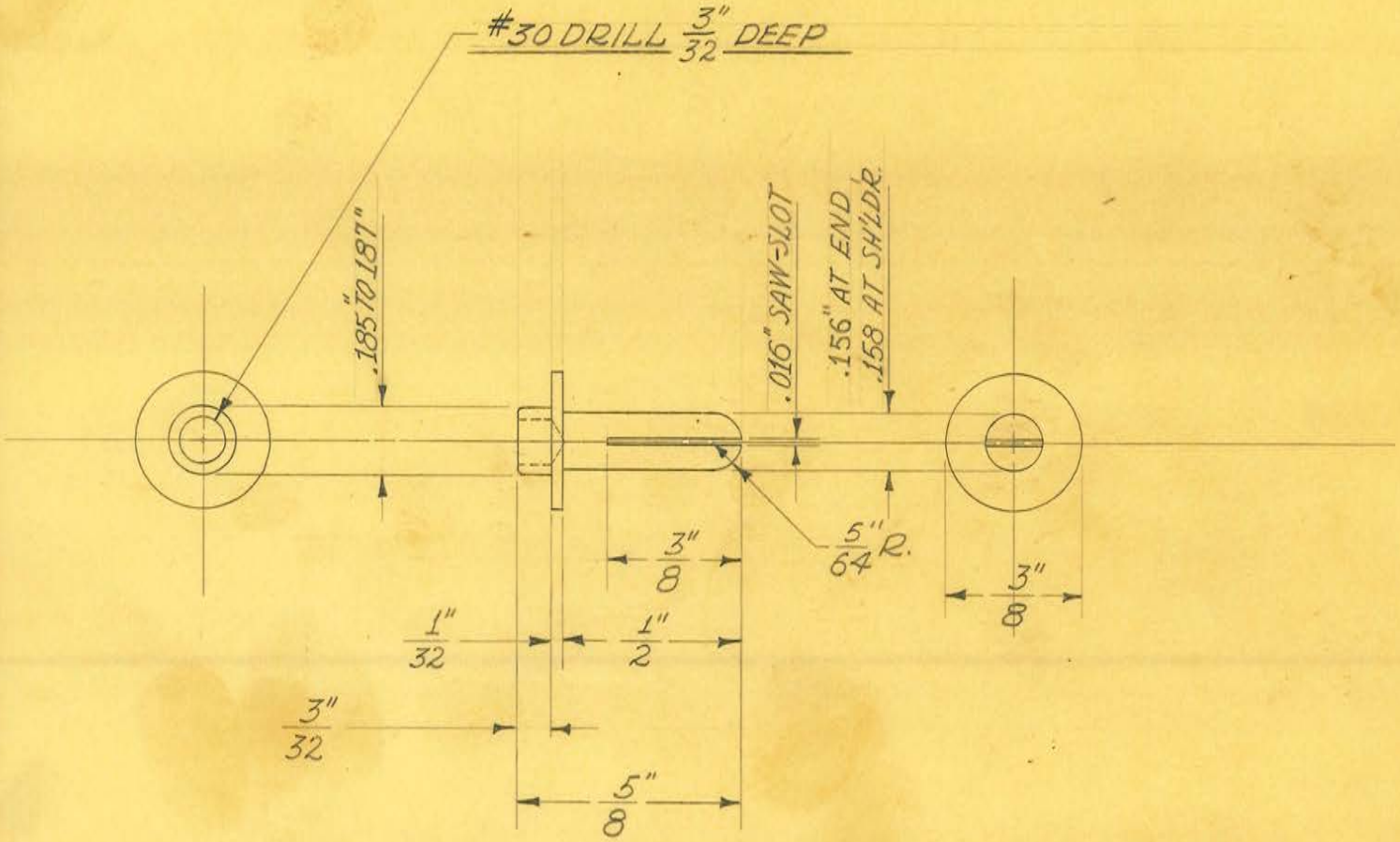


SCALE ÷ 2 DIAMETERS

2 REQUIRED

OBSOLETE

| | | | |
|---|---|---|---|
| SIZE | 3/8" DIAM. | ISSUE 11-2-38 | J.W. |
| KIND | BRASS ROD | CHANGED | |
| SHAPE | | " | |
| FINISH | WHITE #13 | " | |
| TEMP. | | " | |
| PATT. | | " | |

**TITLE:** SHORT WAVE AIR SPACED ELECTRODE DISC CONNECTING TIP

H. G. FISCHER & CO.
2335 WABANSIA AVE.
CHICAGO, ILL.

CAT. NO.

PART NO. 12113

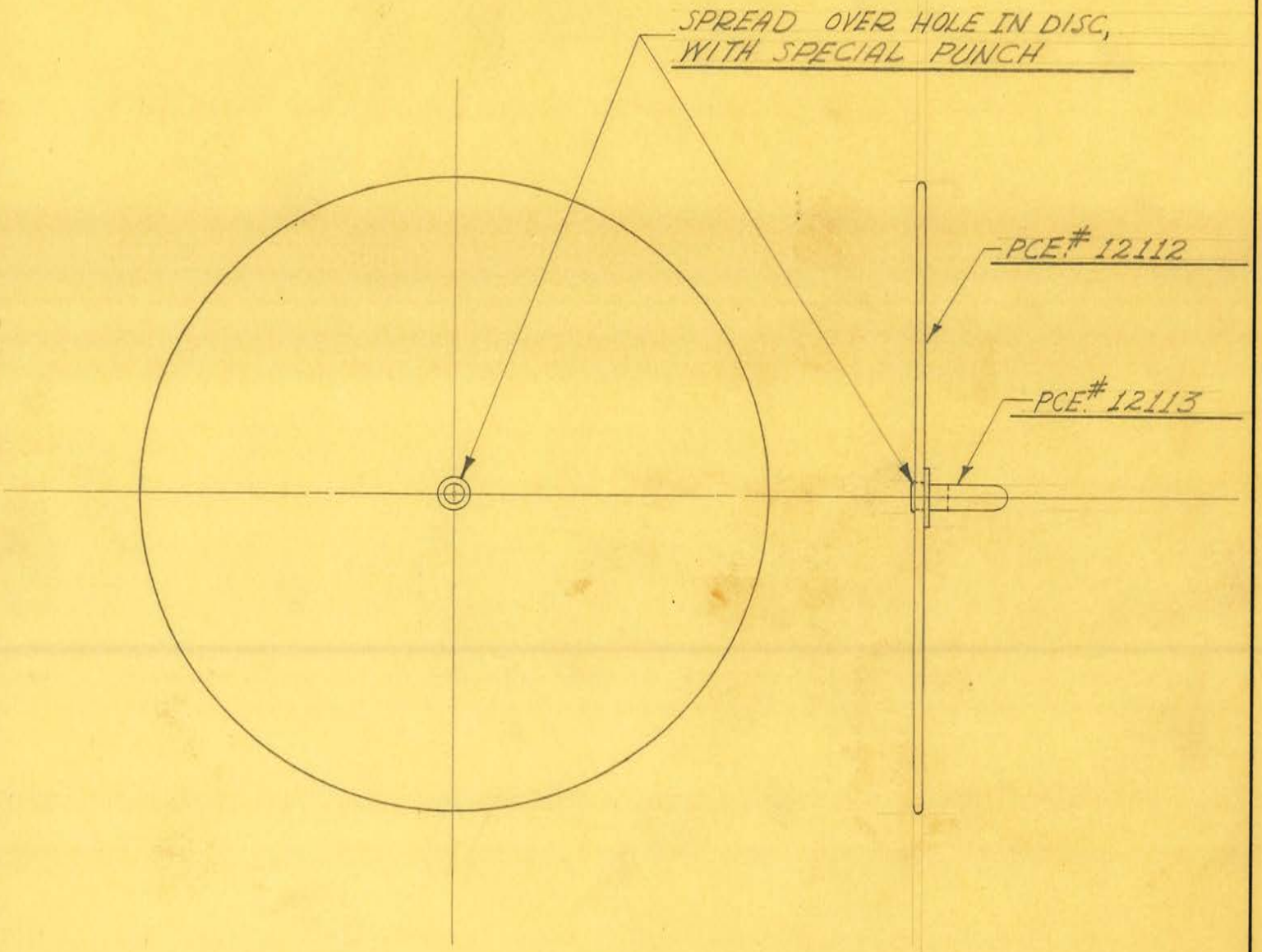


2 REQUIRED

OBSOLETE

| | | | |
|---|---|---|---|
| SIZE | | ISSUE 11-2-38 | J.W. |
| KIND | | CHANGED | |
| SHAPE | | " | |
| FINISH | | " | |
| TEMP. | | " | |
| PATT. | | " | |

**TITLE:** SHORT WAVE AIR SPACED ELECTRODE DISC ASSEMBLY – 4"

H. G. FISCHER & CO.
2335 WABANSIA AVE.
CHICAGO, ILL.

CAT. NO.

PART NO. 12114G

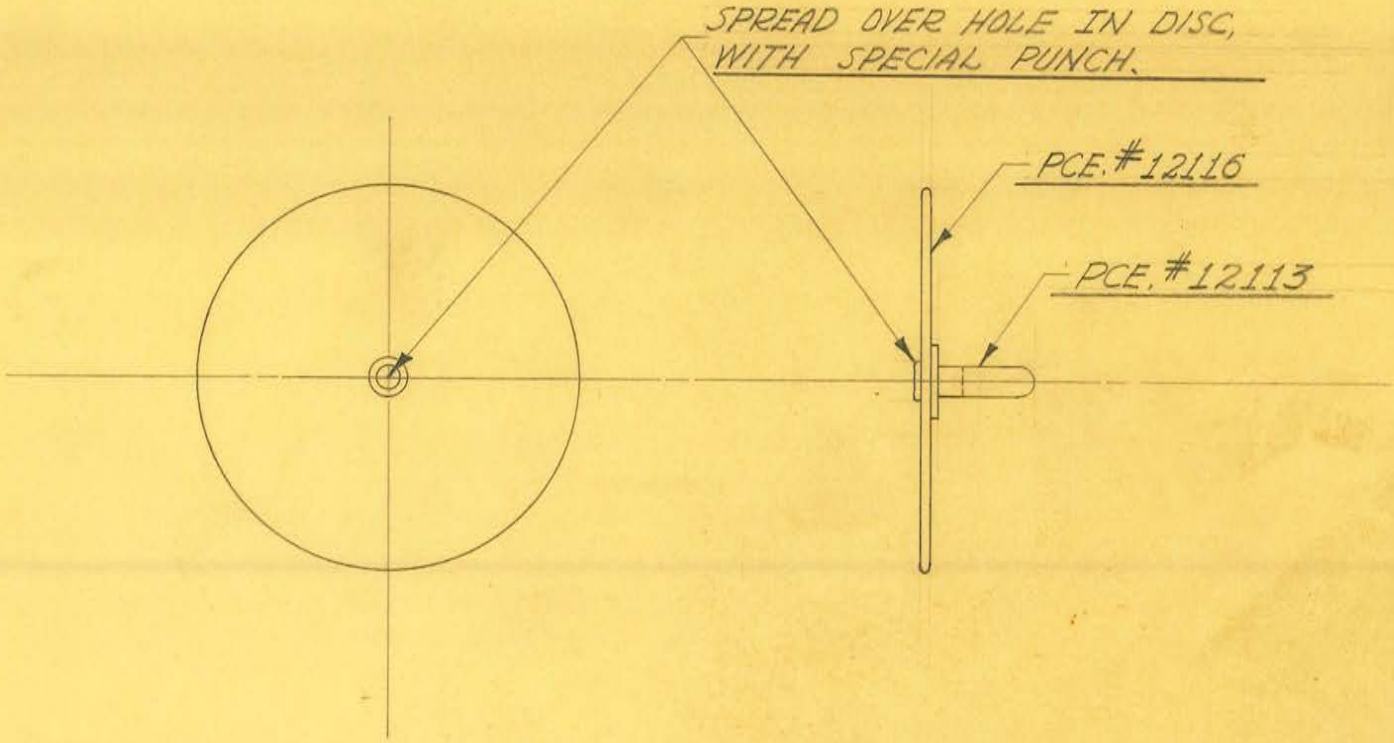


2 REQUIRED

OBSOLETE

| | | | |
|---|---|---|---|
| SIZE | | ISSUE 11-8-38 | J.W. |
| KIND | | CHANGED | |
| SHAPE | | " | |
| FINISH | | " | |
| TEMP. | | " | |
| PATT. | | " | |

**TITLE:** SHORT WAVE AIR SPACED ELECTRODE DISC ASSEMBLY - 2"

H. G. FISCHER & CO.
2335 WABANSIA AVE.
CHICAGO, ILL.

CAT. NO.

PART NO. 12115G

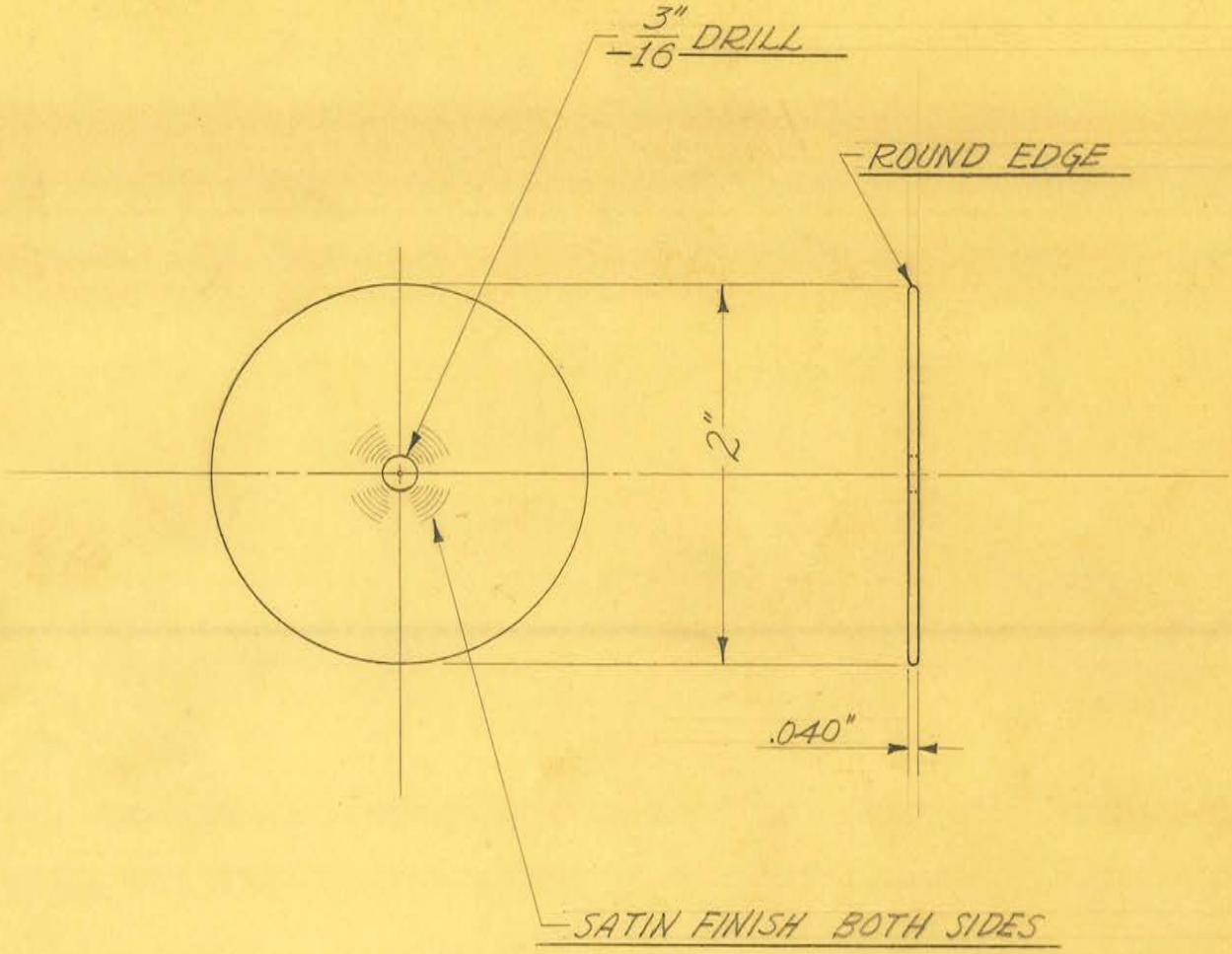


2 REQUIRED

OBSOLETE

| | | | |
|---|---|---|---|
| SIZE | .040" SHEET | ISSUE 11-8-38 | J.W. |
| KIND | ALUMINUM | CHANGED | |
| SHAPE | | " | |
| FINISH | | " | |
| TEMP. | | " | |
| PATT. | | " | |

**TITLE:** SHORT WAVE AIR SPACED ELECTRODE DISC - 2"

H. G. FISCHER & CO.
2335 WABANSIA AVE.
CHICAGO, ILL.

CAT. NO.

PART NO. 12116

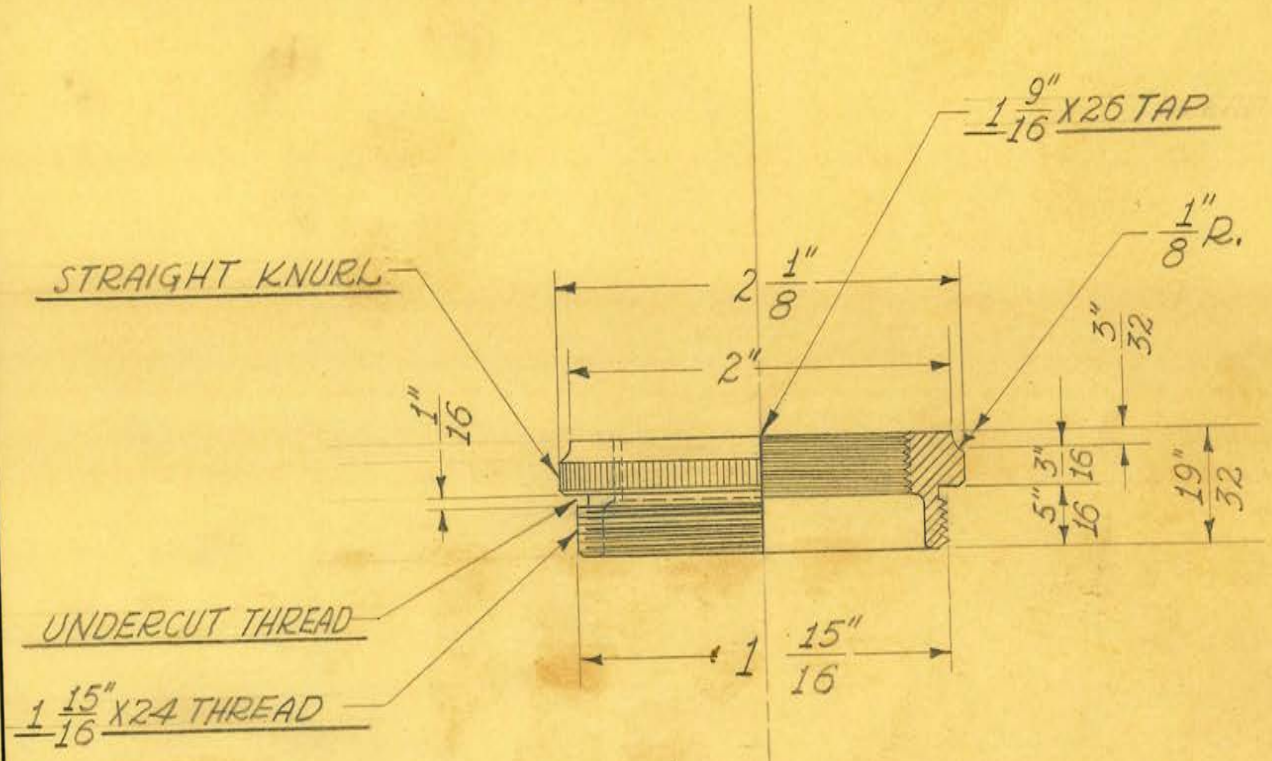


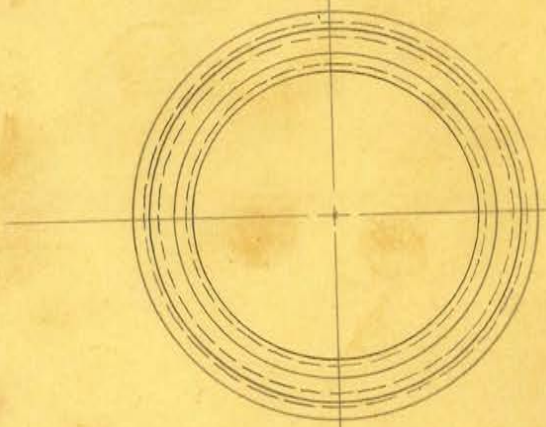

OBSOLETE

| | | | | |
|---|---|---|---|---|
| SIZE | | ISSUE 10-14-38 | J.W. | TITLE: FISCHER MOD. "G" SHOCKPROOF FLUOROSCOPE ADAPTER FOR DENTAL CONE |
| KIND | ALUM. CASTING | CHANGED | | |
| SHAPE | | " | | |
| FINISH | | " | | |
| TEMP. | | " | | |
| PATT. | 1292 | " | | |

H. G. FISCHER & CO.
2335 WABANSIA AVE.
CHICAGO, ILL.

CAT. NO. 4344

PART NO. 12134F

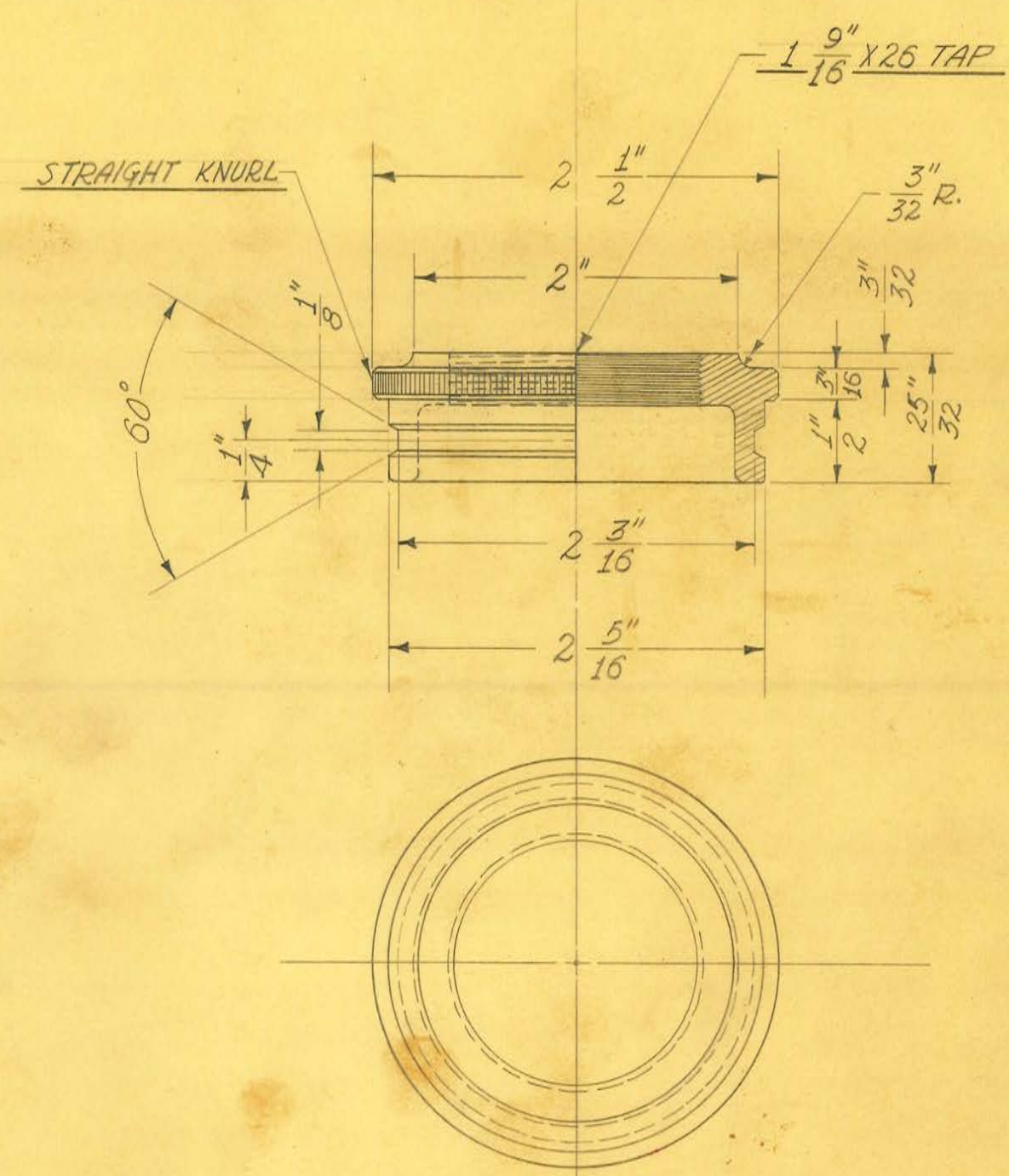


OBSOLETE

| | | | | |
|---|---|---|---|---|
| SIZE | | ISSUE 10-14-38 | J.W. | **TITLE:** FISCHER MOD. "H" PORTABLE X-RAY UNIT ADAPTER FOR DENTAL CONE |
| KIND | ALUM. CASTING | CHANGED | | |
| SHAPE | | " | | |
| FINISH | | " | | |
| TEMP. | | " | | |
| PATT. | 1291 | " | | |

H. G. FISCHER & CO.
2335 WABANSIA AVE.
CHICAGO, ILL.

CAT. NO. 4345

PART NO. 12135F

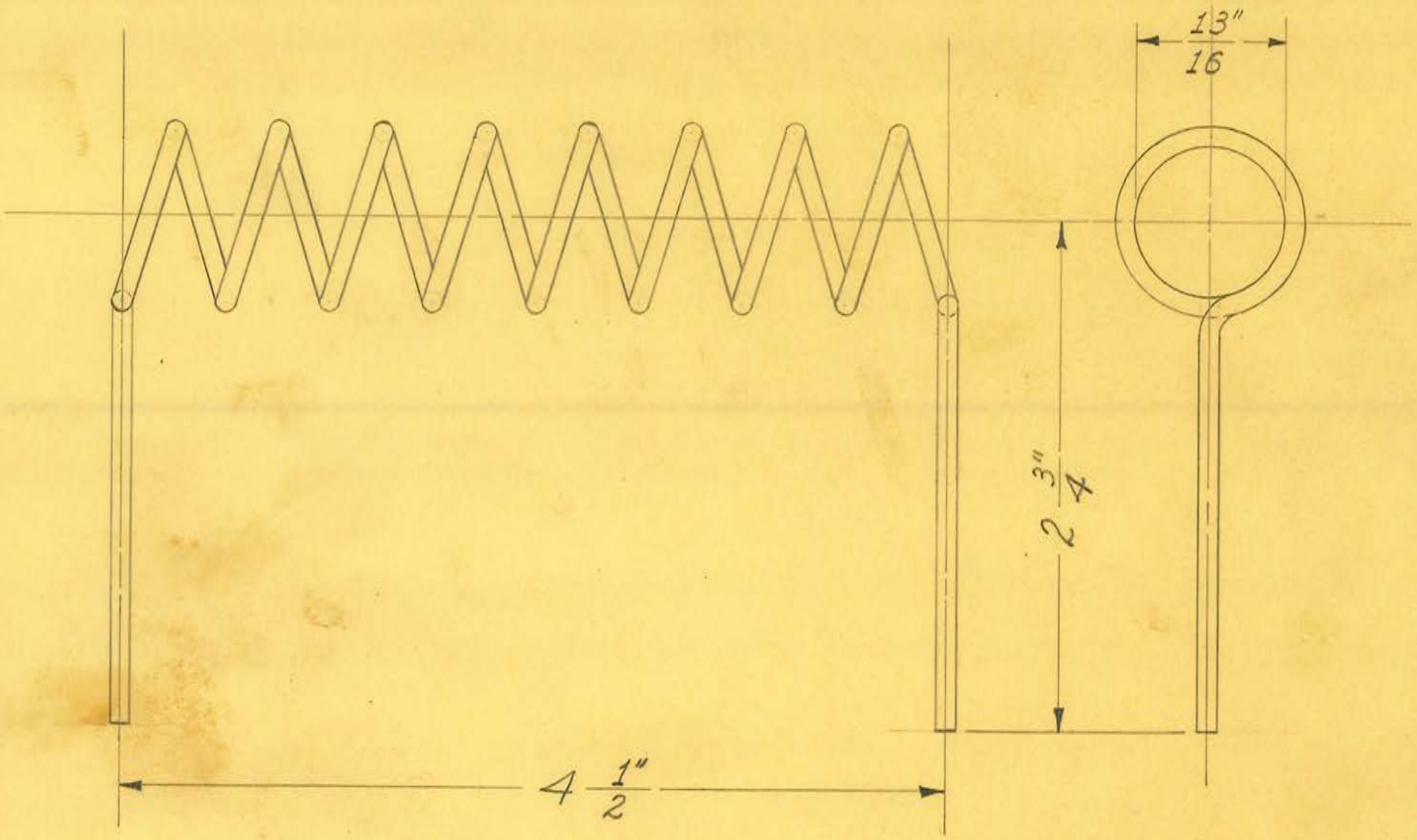


8 TURNS

1 REQUIRED

OBSOLETE

| | | | |
|---|---|---|---|
| SIZE | #10 TINNED | ISSUE 9-16-38 | J.W. |
| KIND | COPPER WIRE | CHANGED | |
| SHAPE | | " | |
| FINISH | | " | |
| TEMP. | | " | |
| PATT. | | " | |

**TITLE:**
FISCHER MOD. "R" SHORT WAVE
GRID COIL

H. G. FISCHER & CO.
2335 WABANSIA AVE.
CHICAGO, ILL.

CAT. NO.

PART NO. 12152

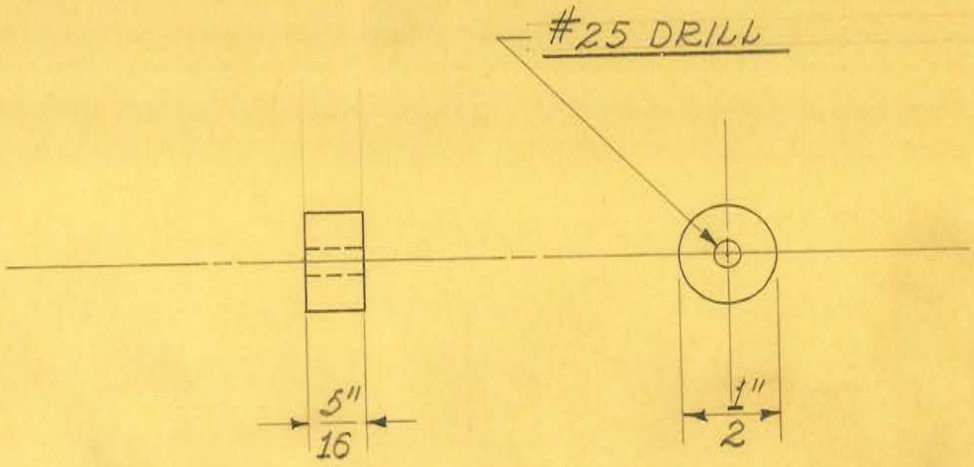


4 REQUIRED

OBSOLETE

| | | | |
|---|---|---|---|
| SIZE | ½" DIAM. | ISSUE 9-16-38 | J.W. |
| KIND | BAKELITE | CHANGED | |
| SHAPE | ROD | " | |
| FINISH | | " | |
| TEMP. | | " | |
| PATT. | | " | |

**TITLE:** FISCHER MOD. "R" SHORT WAVE INDUCTION CORD SOCKET MTG. STRIP SPACER

H. G. FISCHER & CO.
2335 WABANSIA AVE.
CHICAGO, ILL.

CAT. NO.

PART NO. 12153

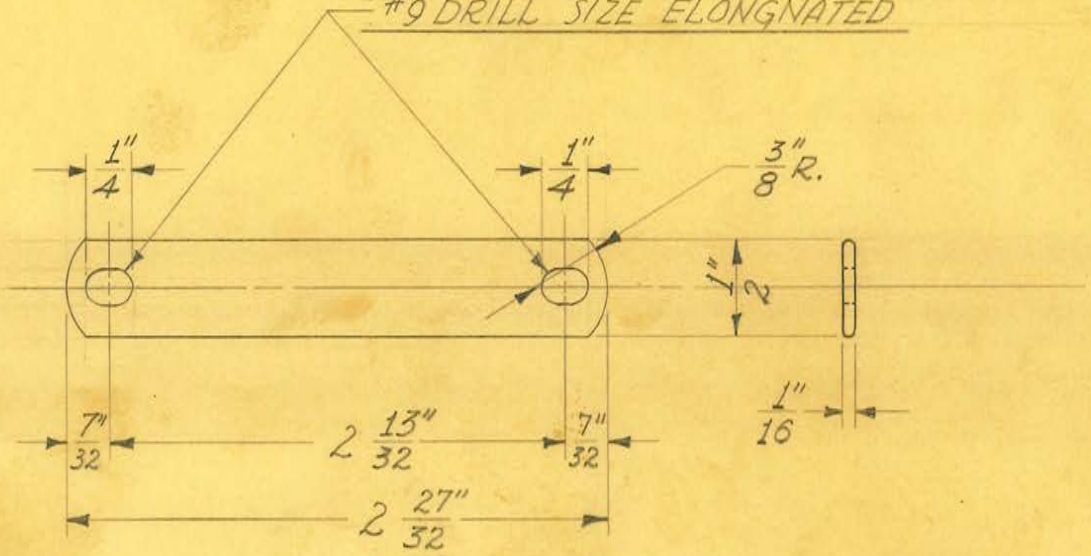


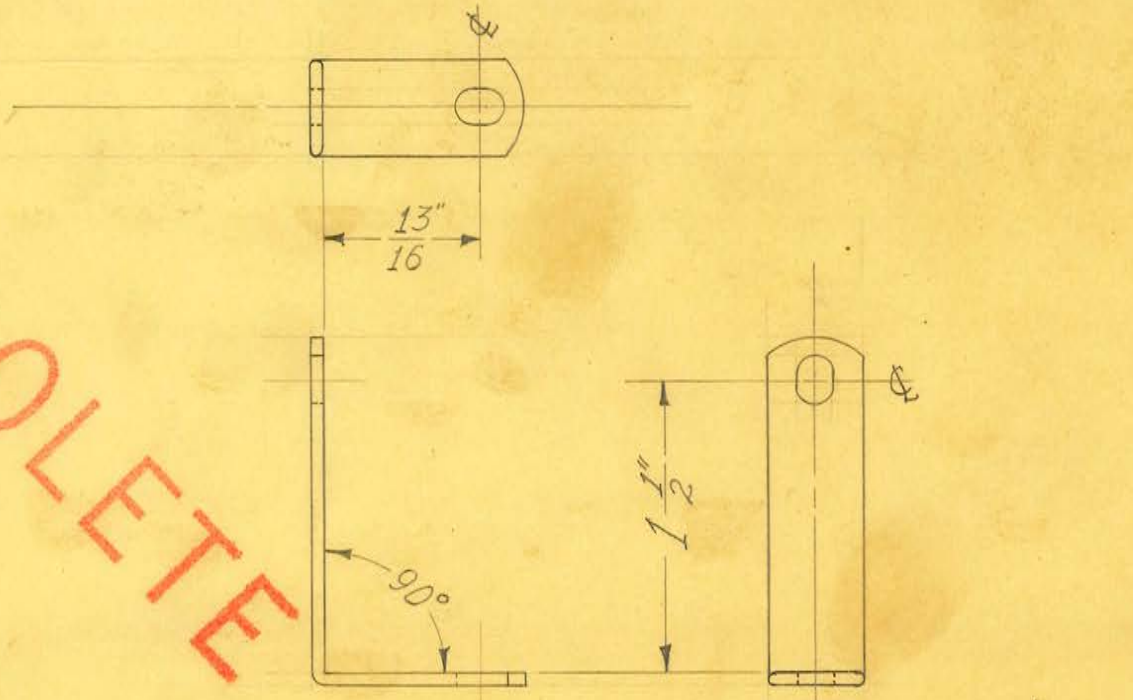


OBSOLETE

3 REQUIRED

obsolete

| | | | | |
|---|---|---|---|---|
| SIZE | 1/2" X 1/16" | ISSUE 9-29-38 | J.W. | TITLE: FISCHER MOD. "R" SHORT WAVE - CABINET ELECT. ARM SUPP. BRACKET REINFORCING STRIP |
| KIND | FLAT WIRE | CHANGED | | |
| SHAPE | | " | | |
| FINISH | CAD. #23 | " | | |
| TEMP. | | " | | |
| PATT. | | " | | |

H. G. FISCHER & CO.
2335 WABANSIA AVE.
CHICAGO, ILL.

CAT. NO.

PART NO. 12154

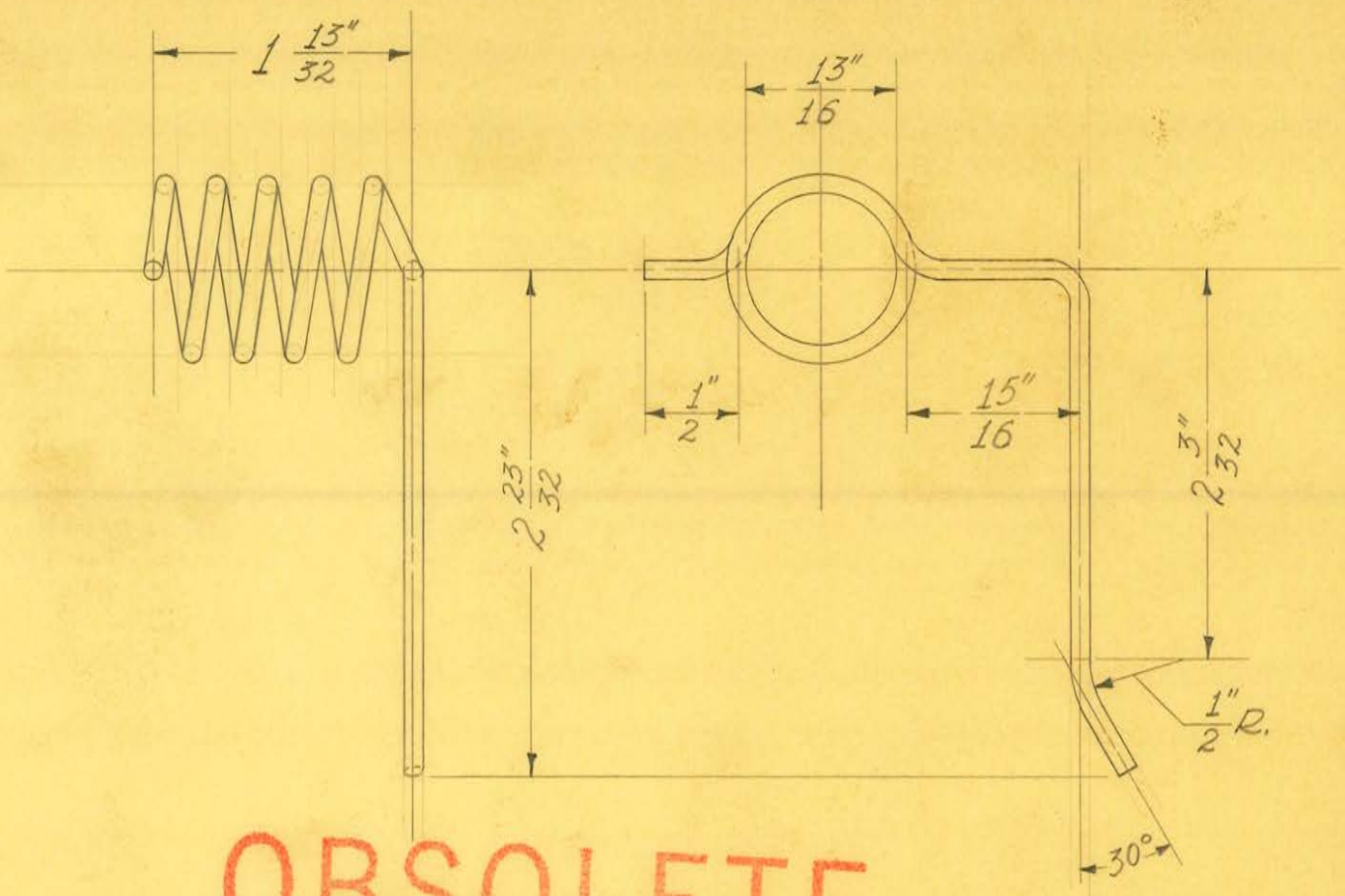


OBSOLETE

4 1/2 TURNS

1 REQUIRED

| | | | |
|---|---|---|---|
| SIZE | #10 TINNED | ISSUE 10-20-38 | J.W. |
| KIND | COPPER WIRE | CHANGED | |
| SHAPE | | " | |
| FINISH | | " | |
| TEMP. | | " | |
| PATT. | | " | |

**TITLE:** FISCHER MOD. "R" SHORT WAVE PATIENT'S TUNING COIL - RIGHT

H. G. FISCHER & CO.
2335 WABANSIA AVE.
CHICAGO, ILL.

CAT. NO.

PART NO. 12158

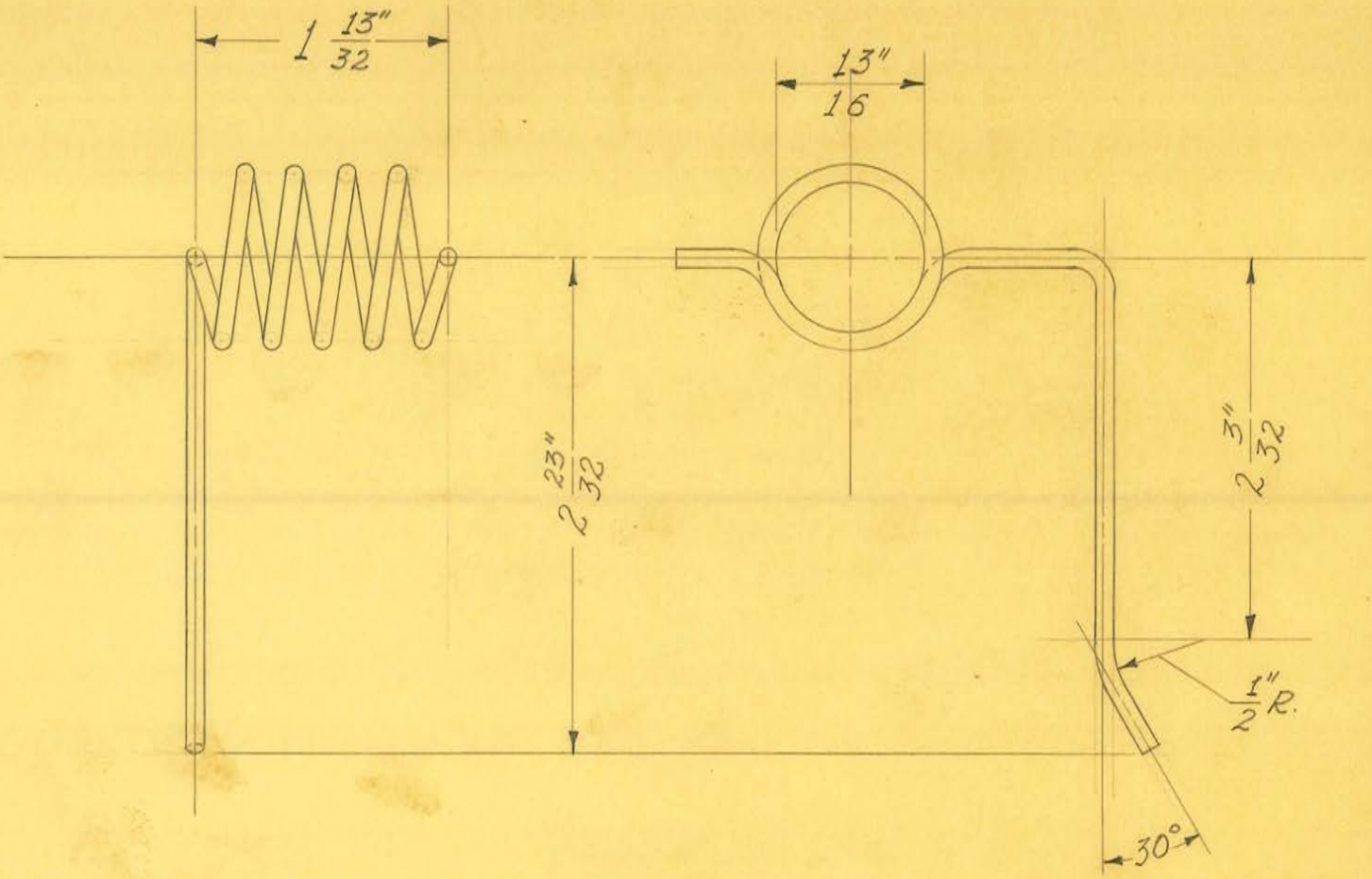


4 1/2 TURNS

1 REQUIRED

OBSOLETE

| | | | |
|---|---|---|---|
| SIZE | #10 TINNED | ISSUE 10-20-38 | J.W. |
| KIND | COPPER WIRE | CHANGED | |
| SHAPE | | " | |
| FINISH | | " | |
| TEMP. | | " | |
| PATT. | | " | |

**TITLE:**
MOD. "R" SHORT WAVE
PATIENT'S TUNING COIL -LEFT

H. G. FISCHER & CO.
2335 WABANSIA AVE.
CHICAGO, ILL.

CAT. NO.

PART NO. 12159

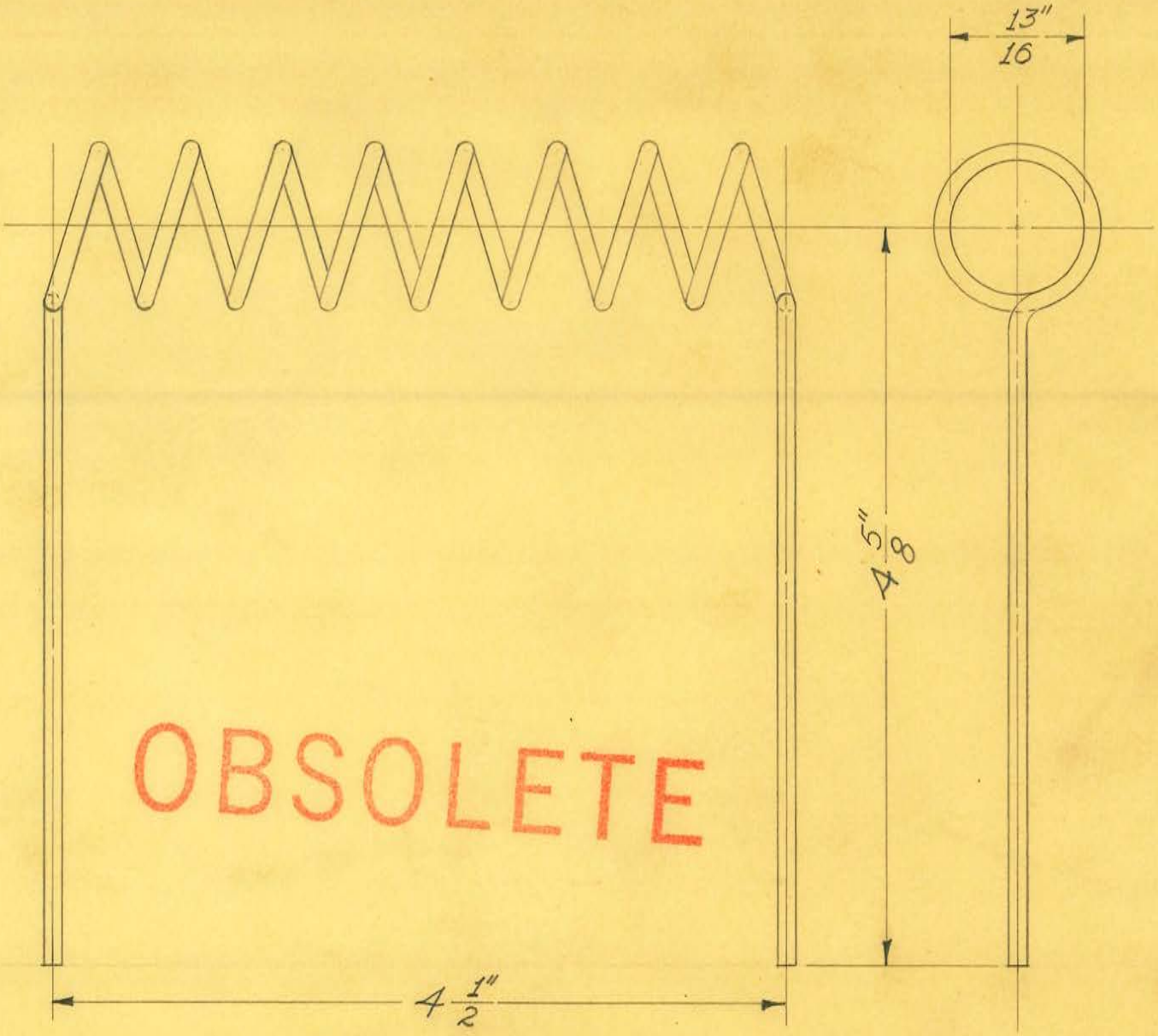


OBSOLETE

8 TURNS
1 REQUIRED

| | | | |
|---|---|---|---|
| SIZE | #10 TINNED | ISSUE 11-16-38 | J.W. |
| KIND | COPPER WIRE | CHANGED | |
| SHAPE | | " | |
| FINISH | | " | |
| TEMP. | | " | |
| PATT. | | " | |

**TITLE:** FISCHER MOD.-PORT. "R"-12 METER GRID COIL

H. G. FISCHER & CO.
2335 WABANSIA AVE.
CHICAGO, ILL.

CAT. NO.

PART NO. 12171

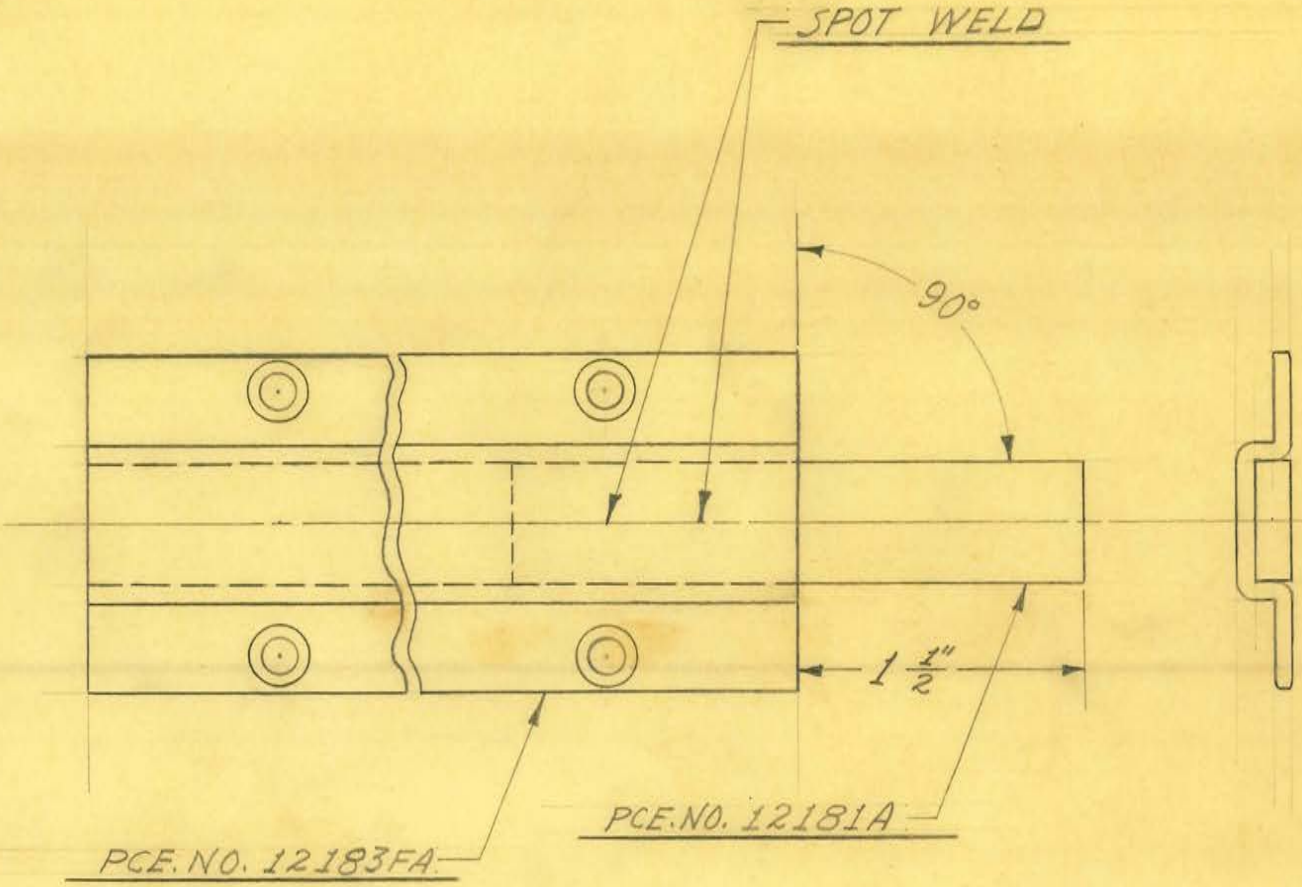


OBSOLETE

Obsolete

| | | | |
|---|---|---|---|
| SIZE | | ISSUE 12-15-39 | J.W. |
| KIND | | CHANGED | |
| SHAPE | | " | |
| FINISH | CAD. #23 | " | |
| TEMP. | | " | |
| PATT. | | " | |

**TITLE:** UNIVERSAL SECTIONAL GUIDE RAIL 2 FT. SECTION WITH TONGUE

H. G. FISCHER & CO.
2335 WABANSIA AVE.
CHICAGO, ILL.

CAT. NO.

PART NO. 12178G

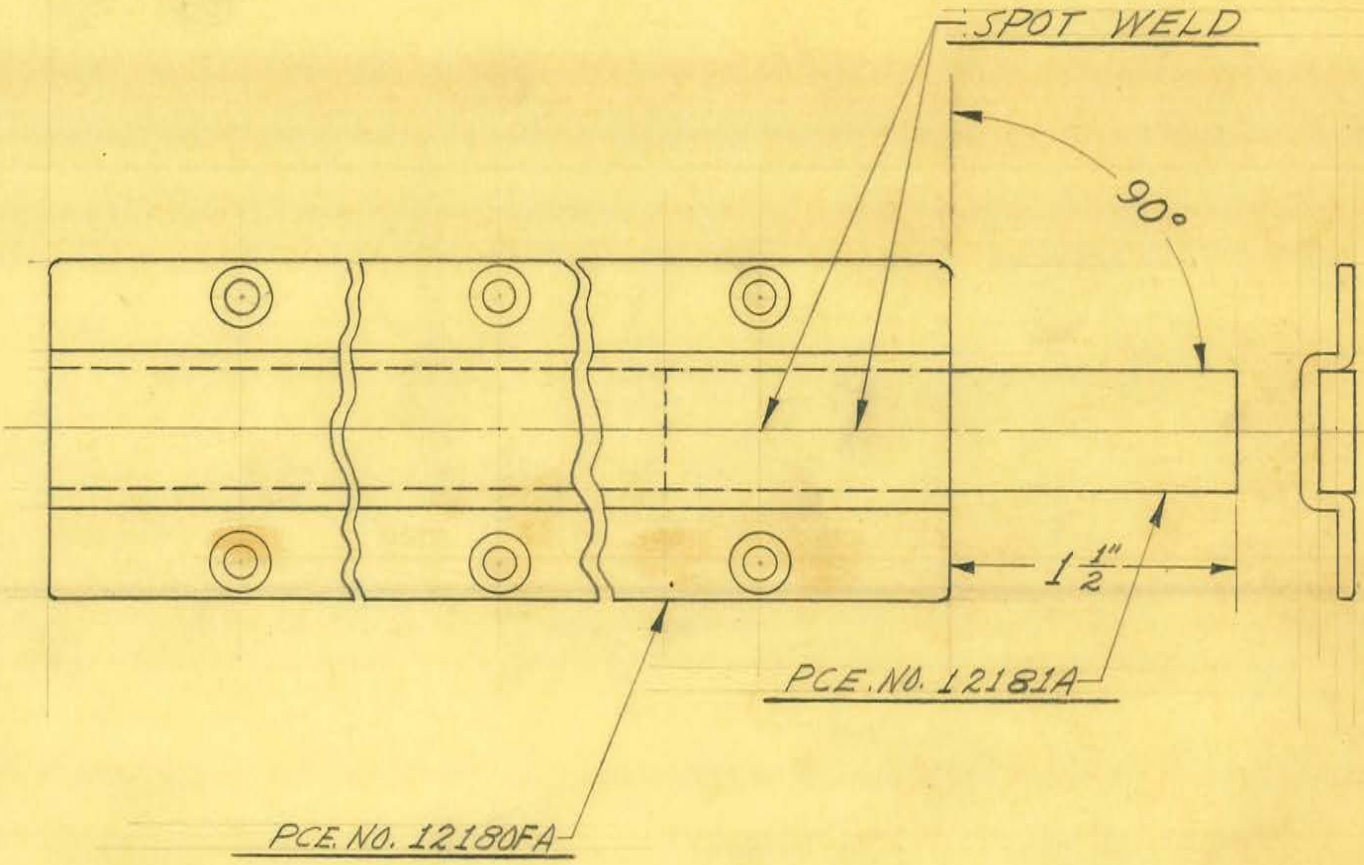


OBSOLETE Obsolete

| | | | |
|---|---|---|---|
| SIZE | | ISSUE 12-14-39 | J.W. |
| KIND | | CHANGED | |
| SHAPE | | " | |
| FINISH | CAD. #23 | " | |
| TEMP. | | " | |
| PATT. | | " | |

**TITLE:** UNIVERSAL SECTIONAL GUIDE RAIL
3 FT. SECTION WITH TONGUE

H. G. FISCHER & CO.
2335 WABANSIA AVE.
CHICAGO, ILL.

CAT. NO.

PART NO. 12179G

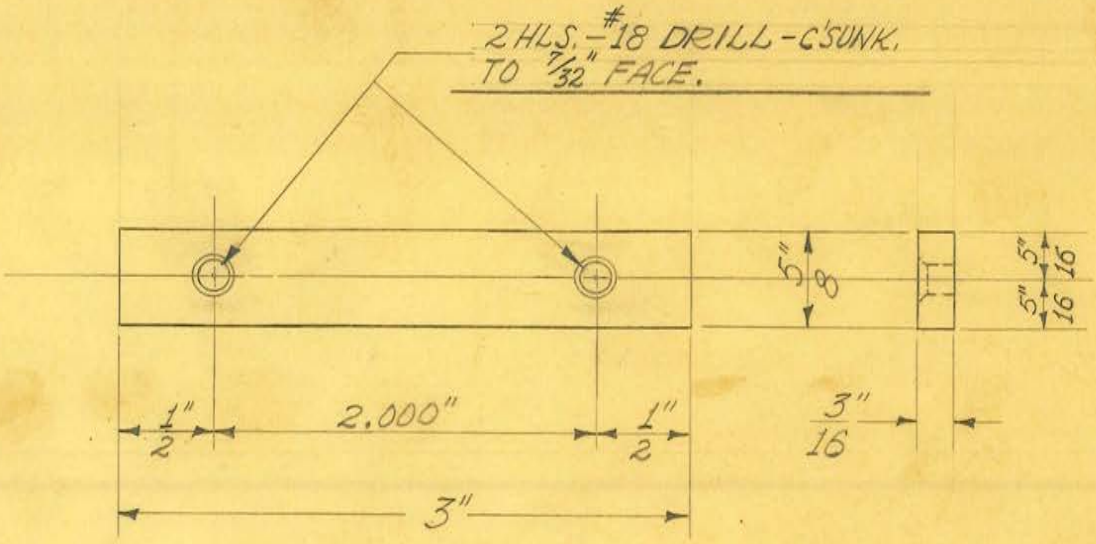


OBSOLETE

Obsolete

| | | | |
|---|---|---|---|
| SIZE | 5/8" X 3/16" | ISSUE 10-5-38 | J.W. |
| KIND | C.R. STEEL | CHANGED | |
| SHAPE | BAR | " | |
| FINISH | CAD. #23 | " | |
| TEMP. | | " | |
| PATT. | | " | |

**TITLE:** UNIVERSAL SECTIONAL GUIDE RAIL CONNECTION LINK

H. G. FISCHER & CO.
2335 WABANSIA AVE.
CHICAGO, ILL.

CAT. NO.

PART NO. 12181

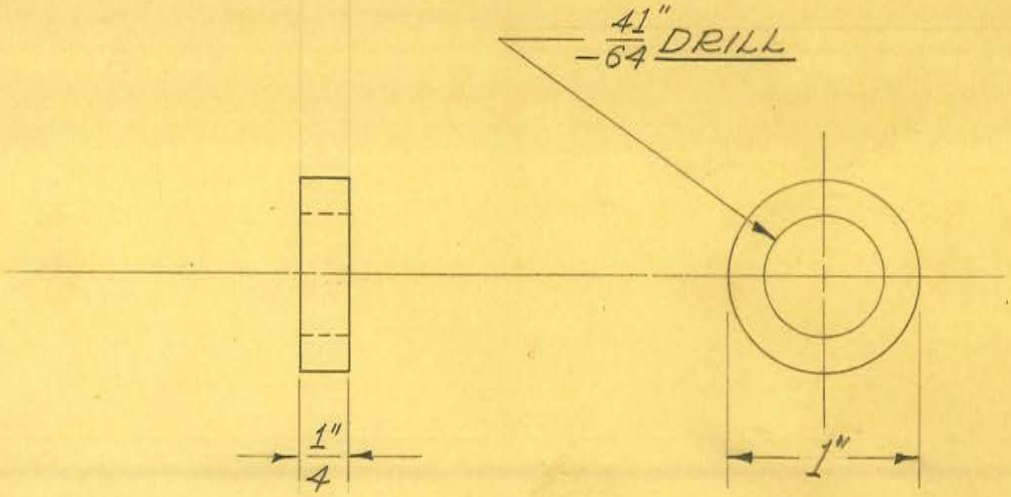


2 REQUIRED

OBSOLETE

| | | | |
|---|---|---|---|
| SIZE | 1" DIAM. | ISSUE 1-16-39 | J.W. |
| KIND | C.R. STEEL | CHANGED | |
| SHAPE | | " | |
| FINISH | CAD. #23 | " | |
| TEMP. | | " | |
| PATT. | | " | |

**TITLE:** FISCHER MOD. "GM" MOBILE UNIT
RUBBER ROLLER SPACER

H. G. FISCHER & CO.
2335 WABANSIA AVE.
CHICAGO, ILL.

CAT. NO.

PART NO. 12197

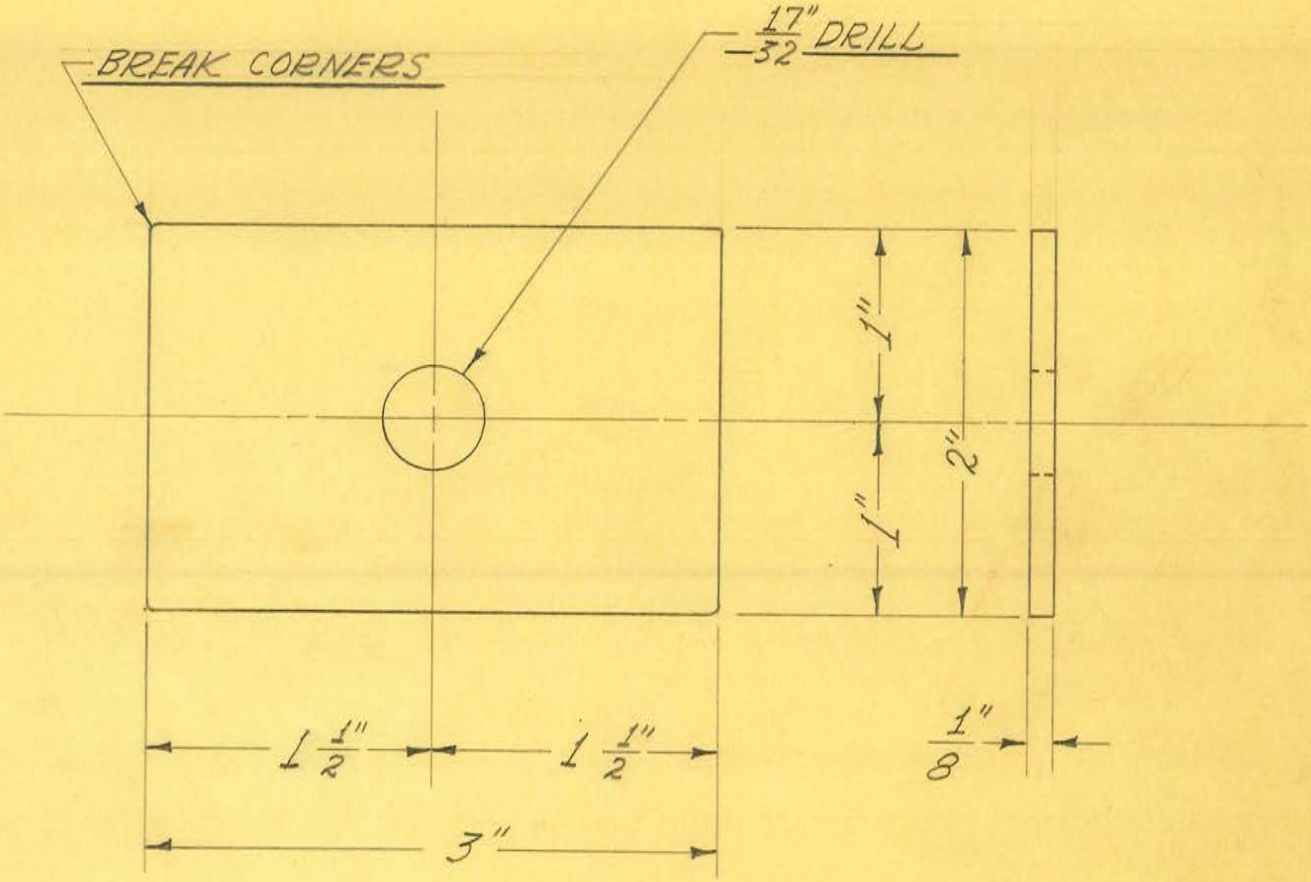


1 REQUIRED

OBSOLETE

| | | | |
|---|---|---|---|
| SIZE | 2" X 1/8" STRIP | ISSUE 1-26-39 | J.W. |
| KIND | C.R. STEEL | CHANGED | |
| SHAPE | | " | |
| FINISH | | " | |
| TEMP. | | " | |
| PATT. | | " | |

**TITLE:** FISCHER MOD. "GM." X-RAY MOBILE UNIT COUNTERWEIGHT LOCK PLATE

H. G. FISCHER & CO.
2335 WABANSIA AVE.
CHICAGO, ILL.

CAT. NO.

PART NO. 12198

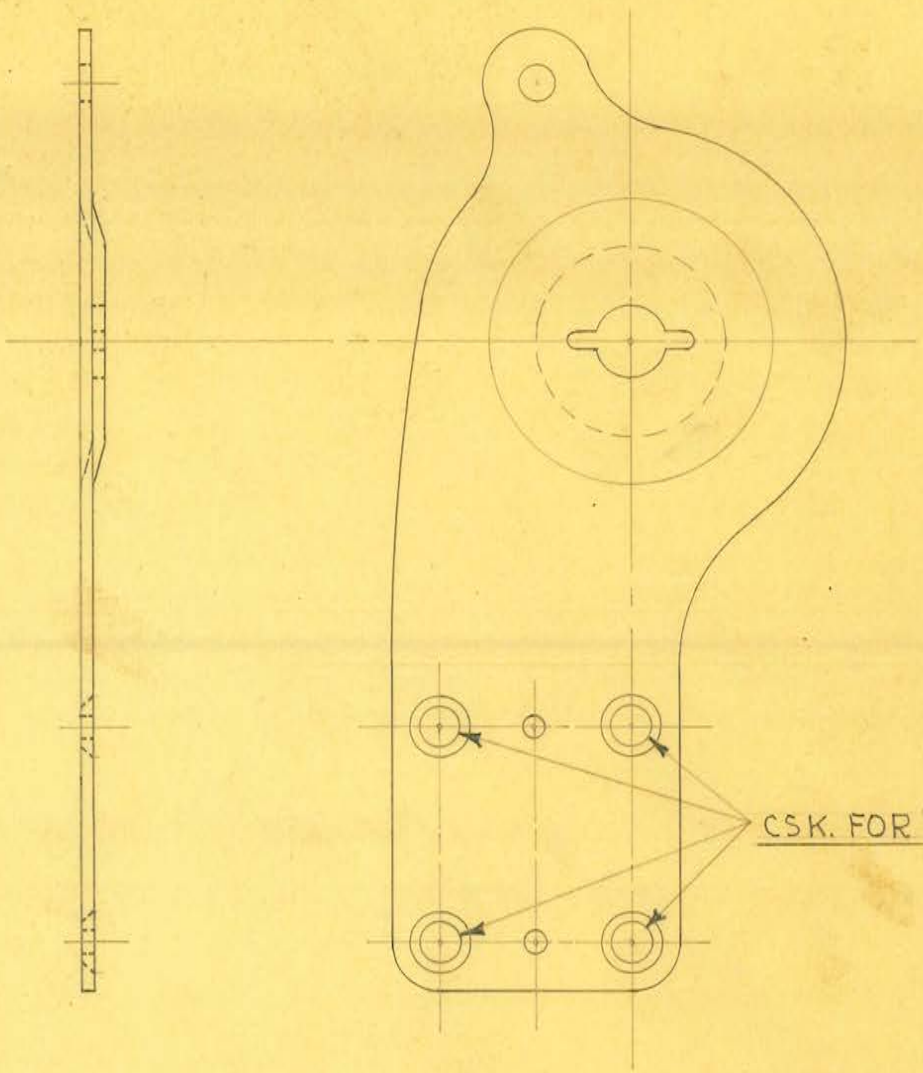


1 REQUIRED

OBSOLETE

see new Tracing

| | | | | |
|---|---|---|---|---|
| SIZE | | ISSUE 8-9-38 | HE. | **TITLE:** SHORT WAVE INDUCTION COIL ELECTRODE ARM - SWIVEL SUPP. - LEFT |
| KIND | | CHANGED | | |
| SHAPE | | " 12-7-38 | J.W. | |
| FINISH | | " | | |
| TEMP. | | " | | |
| PATT. | | " | | |

H. G. FISCHER & CO.
2335 WABANSIA AVE.
CHICAGO, ILL.

CAT. NO.

PART NO. 11981AF

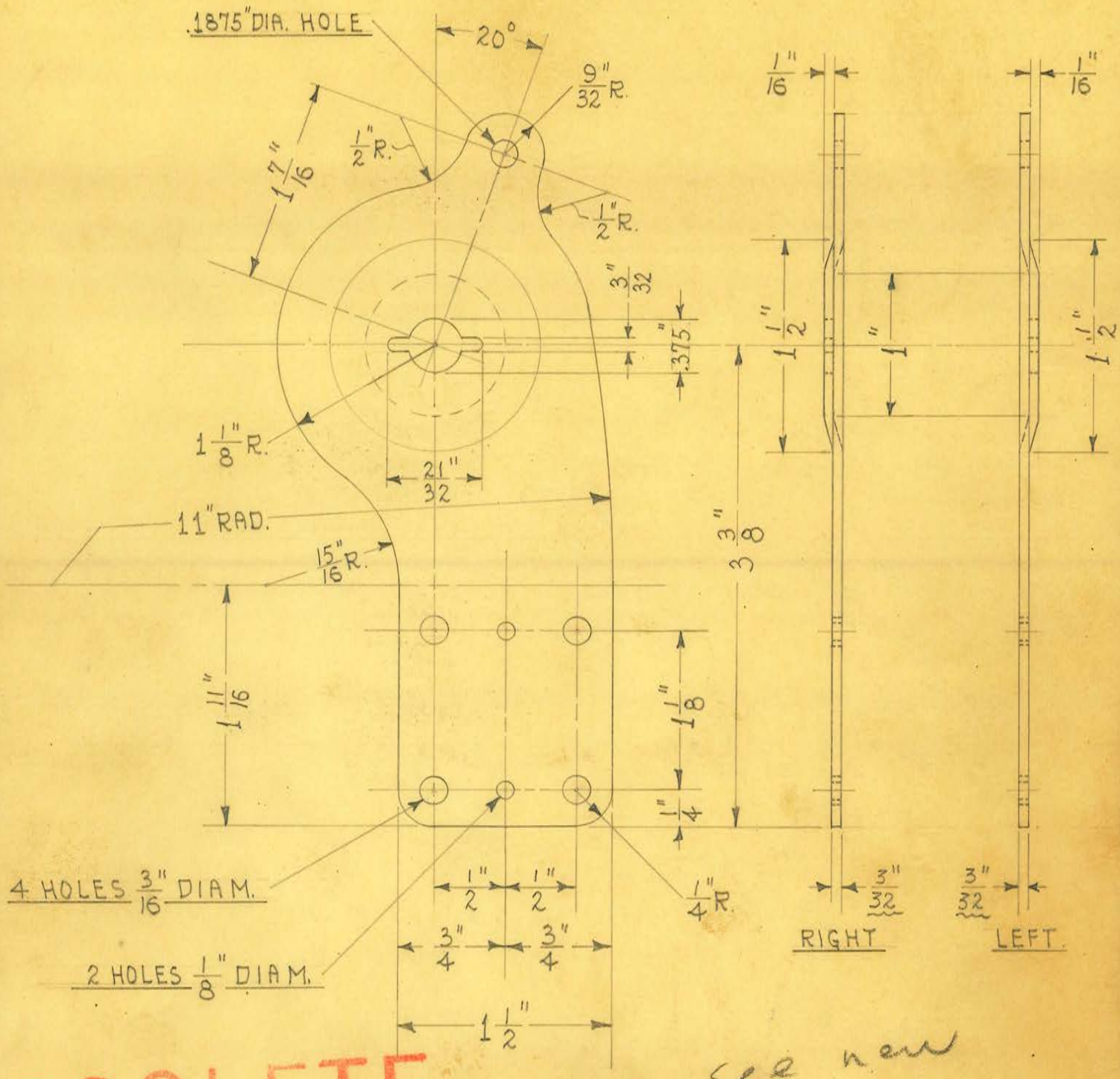


OBSOLETE

1 REQUIRED

See new Tracing

| | | | |
|---|---|---|---|
| SIZE | 3/32" | ISSUE 8-8-38 | HE. |
| KIND | C.R. STEEL (H.H.) | CHANGED | |
| SHAPE | | " 12-7-38 | J.W. |
| FINISH | | " | |
| TEMP. | | " | |
| PATT. | | " | |

**TITLE:**
SHORT WAVE INDUCTION COIL ELECTRODE ARM-
SWIVEL SUPP.- LEFT & RIGHT
(BLANKED & FORMED)

H. G. FISCHER & CO.
2335 WABANSIA AVE.
CHICAGO, ILL.

CAT. NO.

PART NO. 11981A-LEFT
11982A-RIGHT

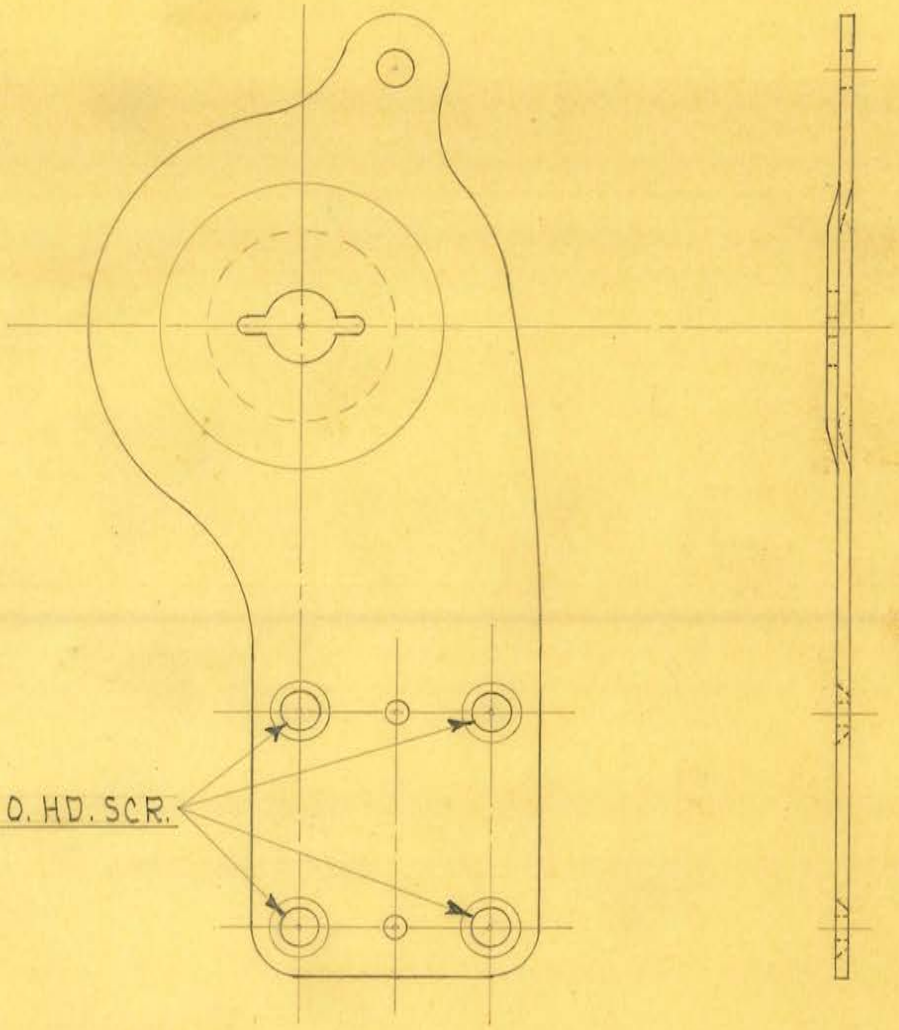


1 REQUIRED

OBSOLETE

see new tracing

| | | | |
|---|---|---|---|
| SIZE | | ISSUE 8-8-38 | HE. |
| KIND | | CHANGED 12-7-38 | J.W. |
| SHAPE | | " | |
| FINISH | | " | |
| TEMP. | | " | |
| PATT. | | " | |

**TITLE:** SHORT WAVE INDUCTION COIL ELECTRODE ARM-SWIVEL SUPP.-RIGHT

H. G. FISCHER & CO.
2335 WABANSIA AVE.
CHICAGO, ILL.

CAT. NO.

PART NO. 11982AF

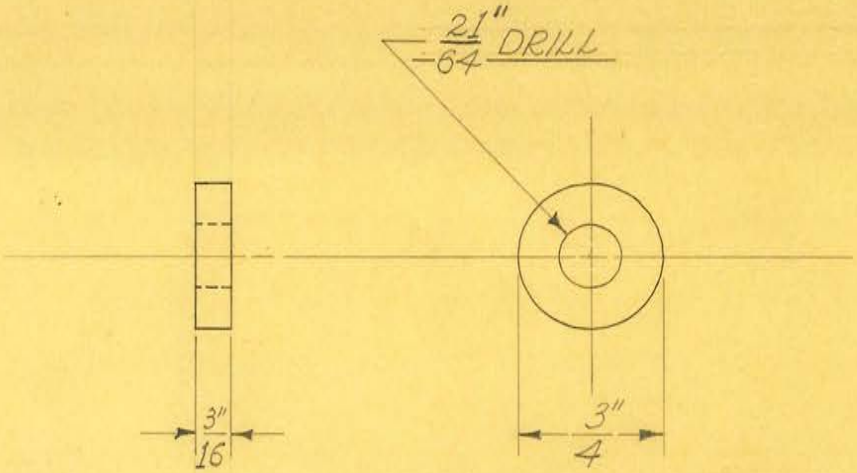


1 REQUIRED

OBSOLETE

Absolete

| | | | | |
|---|---|---|---|---|
| SIZE | 3/4" DIAM. | ISSUE 7-22-38 | J.W. | **TITLE:** SHORT WAVE INDUCTION COIL ELECT. ARM-SPRING RETAINING WASHER |
| KIND | C.R. STEEL | CHANGED | | |
| SHAPE | ROD | " | | |
| FINISH | CAD. #23 | " | | |
| TEMP. | | " | | |
| PATT. | | " | | |

H. G. FISCHER & CO.
2335 WABANSIA AVE.
CHICAGO, ILL.

CAT. NO.

PART NO. 11989

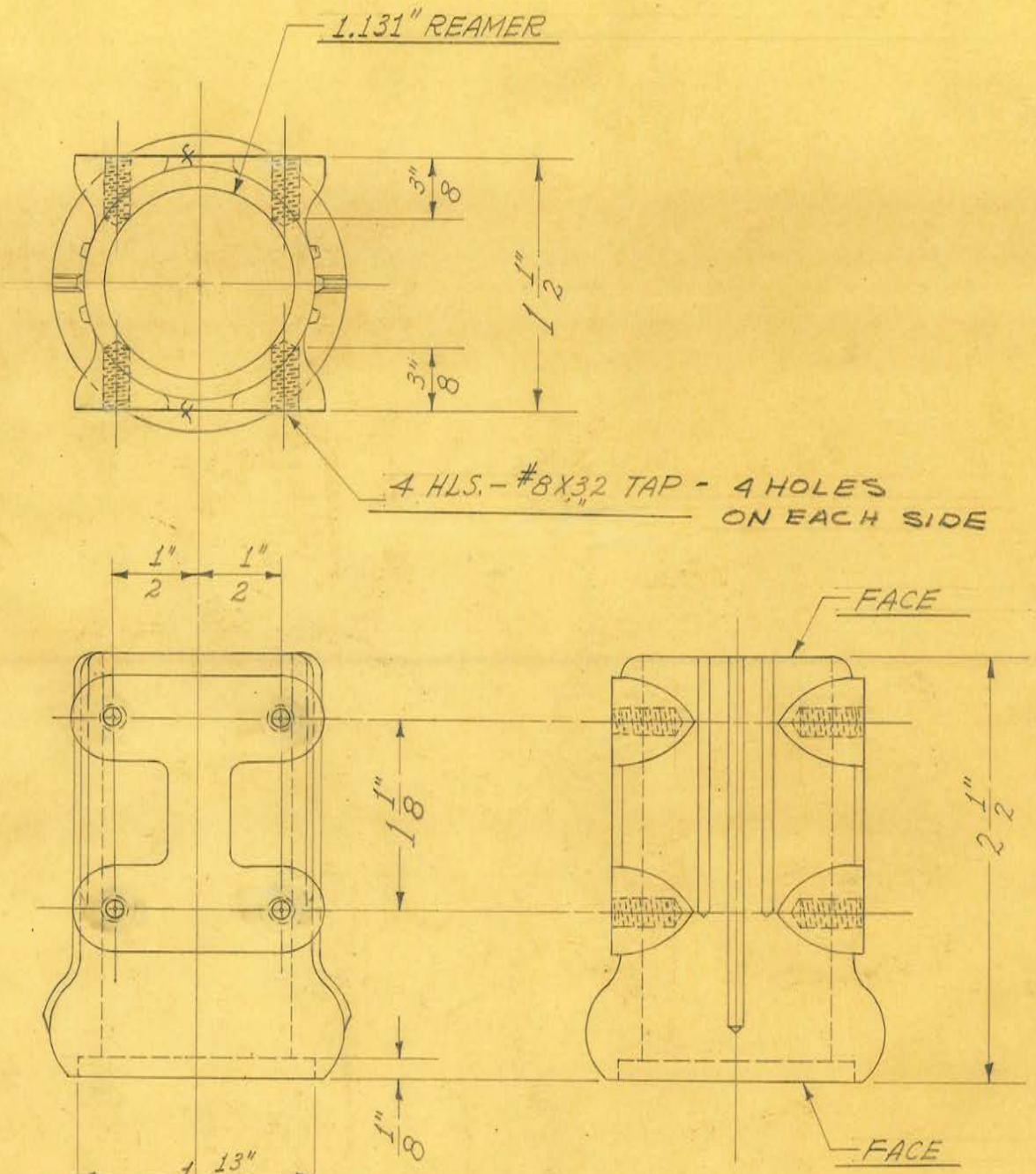


OBSOLETE

1 REQUIRED

RS

| | | | |
|---|---|---|---|
| KIND SIZE | #214 | ISSUE 8-29-38 | J.W. |
| KIND | ALUM. CASTING | CHANGED | |
| SHAPE | | " | |
| FINISH | | " | |
| TEMP. | | " | |
| PATT. | 1260 | " | |

**TITLE:** SHORT WAVE INDUCTION COIL ELECTRODE ARM SWIVEL BASE

H. G. FISCHER & CO.
2338 WABANSIA AVE.
CHICAGO, ILL.

CAT. NO.

PART NO. 12015F

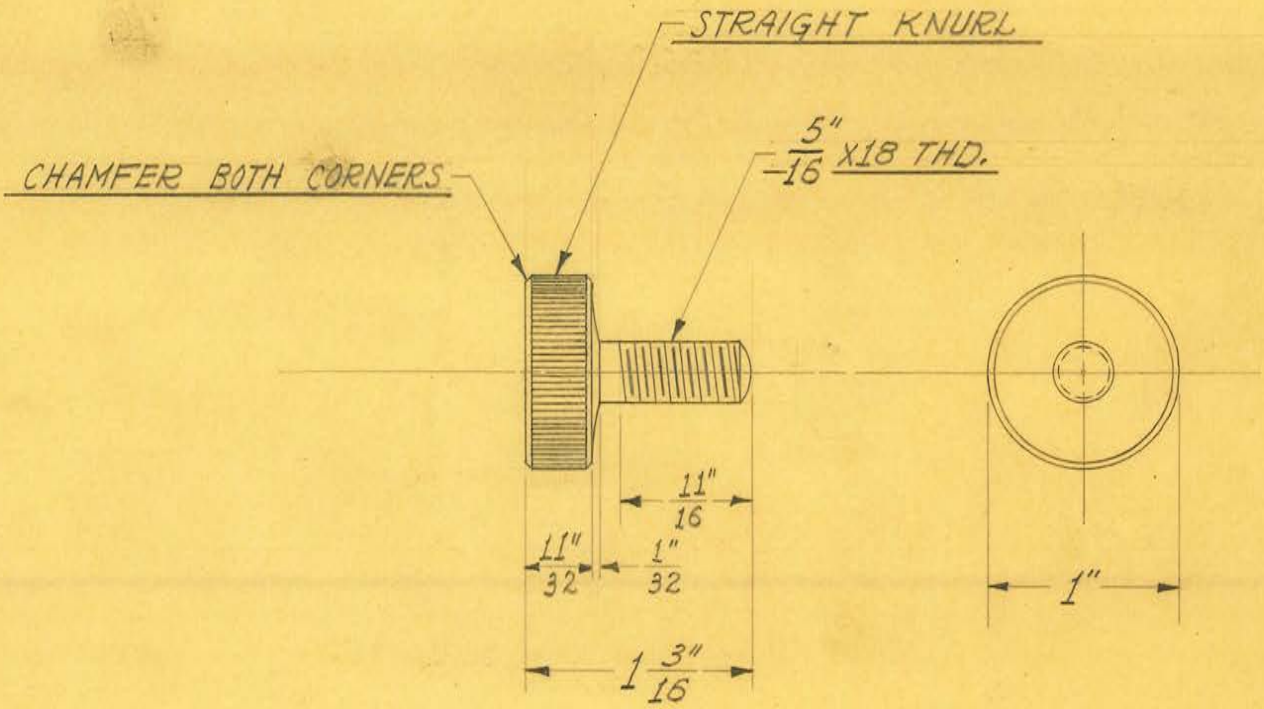


1 REQUIRED

OBSOLETE

Obsolete

| | | | |
|---|---|---|---|
| SIZE | 1" DIAM. | ISSUE 9-9-38 | J.W. |
| KIND | HARD RUBBER | CHANGED | |
| SHAPE | ROD | " | |
| FINISH | POL. & BUFF | " | |
| TEMP. | | " | |
| PATT. | | " | |

**TITLE:**
SHORT WAVE INDUCTION COIL ELECTRODE
HEAD - CLAMP THUMB SCREW

H. G. FISCHER & CO.
2335 WABANSIA AVE.
CHICAGO, ILL.

CAT. NO.

PART NO. 12032

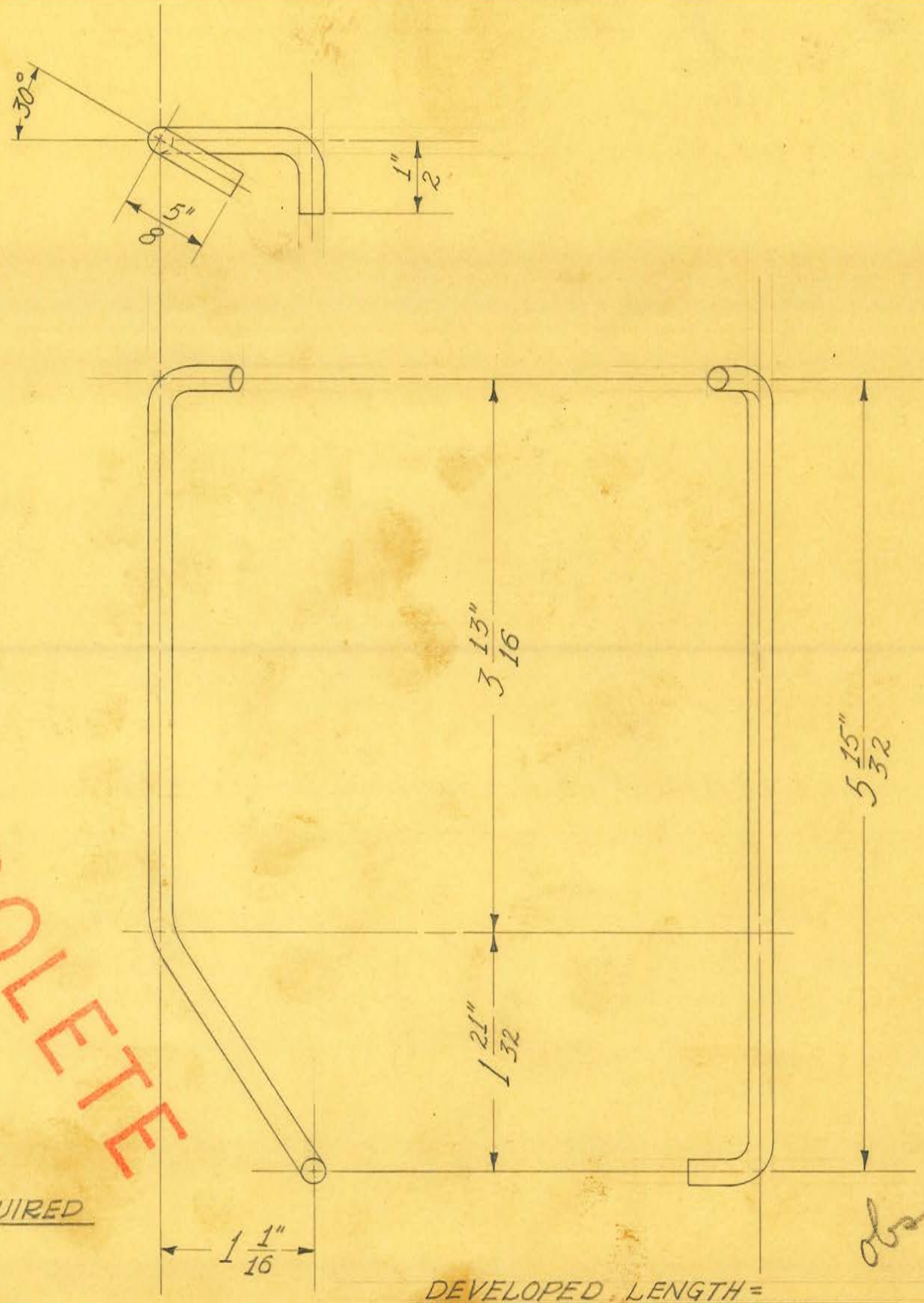


OBSOLETE

1 REQUIRED

Absolute

DEVELOPED LENGTH =

| | | | |
|---|---|---|---|
| SIZE | #6 BARE | ISSUE 10-20-38 | J.W. |
| KIND | COPPER WIRE | CHANGED | |
| SHAPE | | " | |
| FINISH | ACID DIP | " | |
| TEMP. | | " | |
| PATT. | | " | |

**TITLE:** FISCHER MOD. "M" SHORT WAVE OSCILLATING COIL & COND. CONN. WIRE - RIGHT

H. G. FISCHER & CO.
2335 WABANSIA AVE.
CHICAGO, ILL.

CAT. NO.

PART NO. 12062

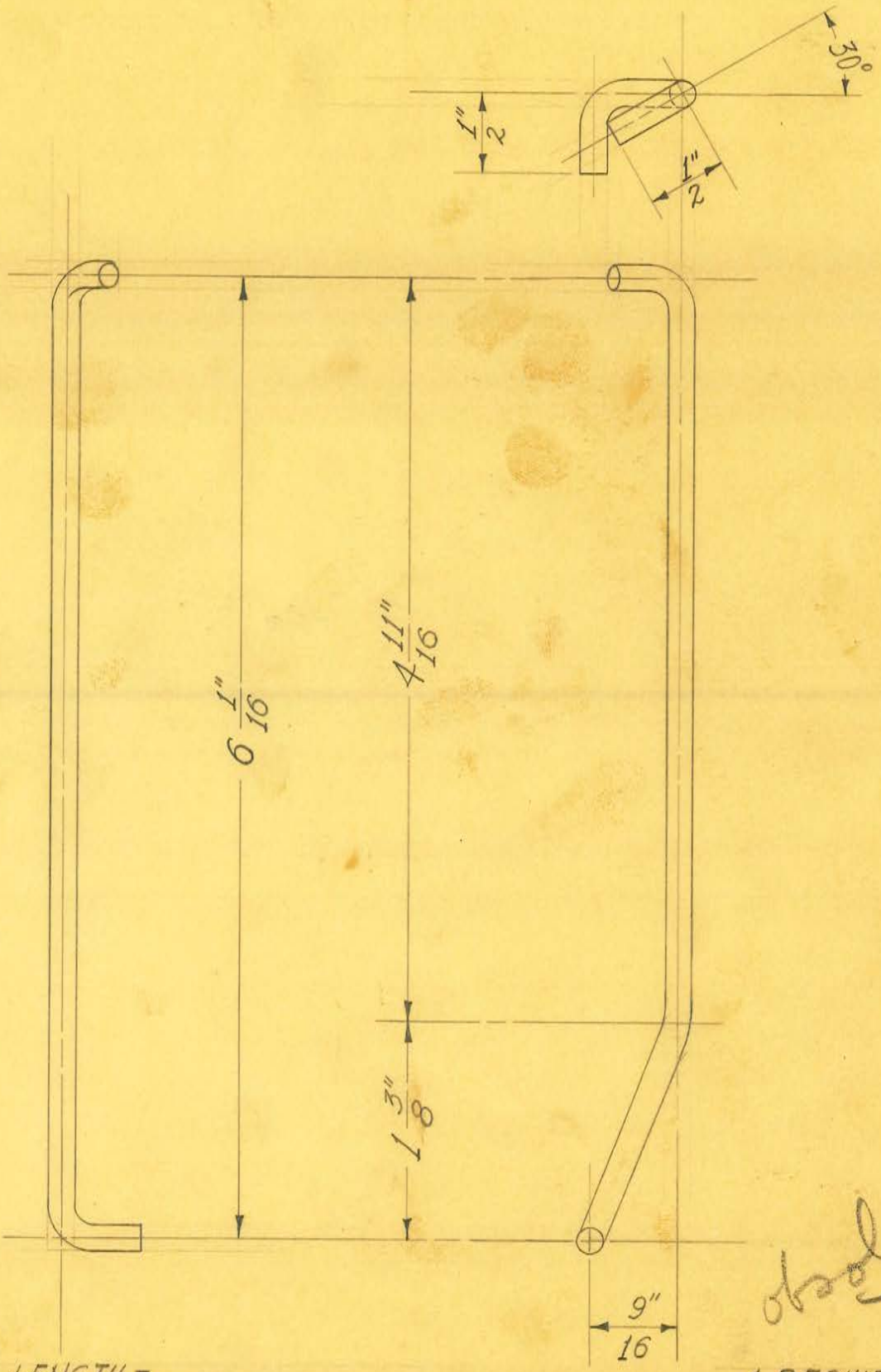


OBSOLETE

obsolete

DEVELOPED LENGTH =

1 REQUIRED

| | | | |
|---|---|---|---|
| SIZE | #6 BARE | ISSUE 10-20-38 | J.W. |
| KIND | COPPER WIRE | CHANGED | |
| SHAPE | | " | |
| FINISH | ACID DIP | " | |
| TEMP. | | " | |
| PATT. | | " | |

**TITLE:** FISCHER MOD. "M" SHORT WAVE OSCILLATING COIL & COND. CONN. WIRE - LEFT

H. G. FISCHER & CO.
2335 WABANSIA AVE.
CHICAGO, ILL.

CAT. NO.

PART NO. 12063

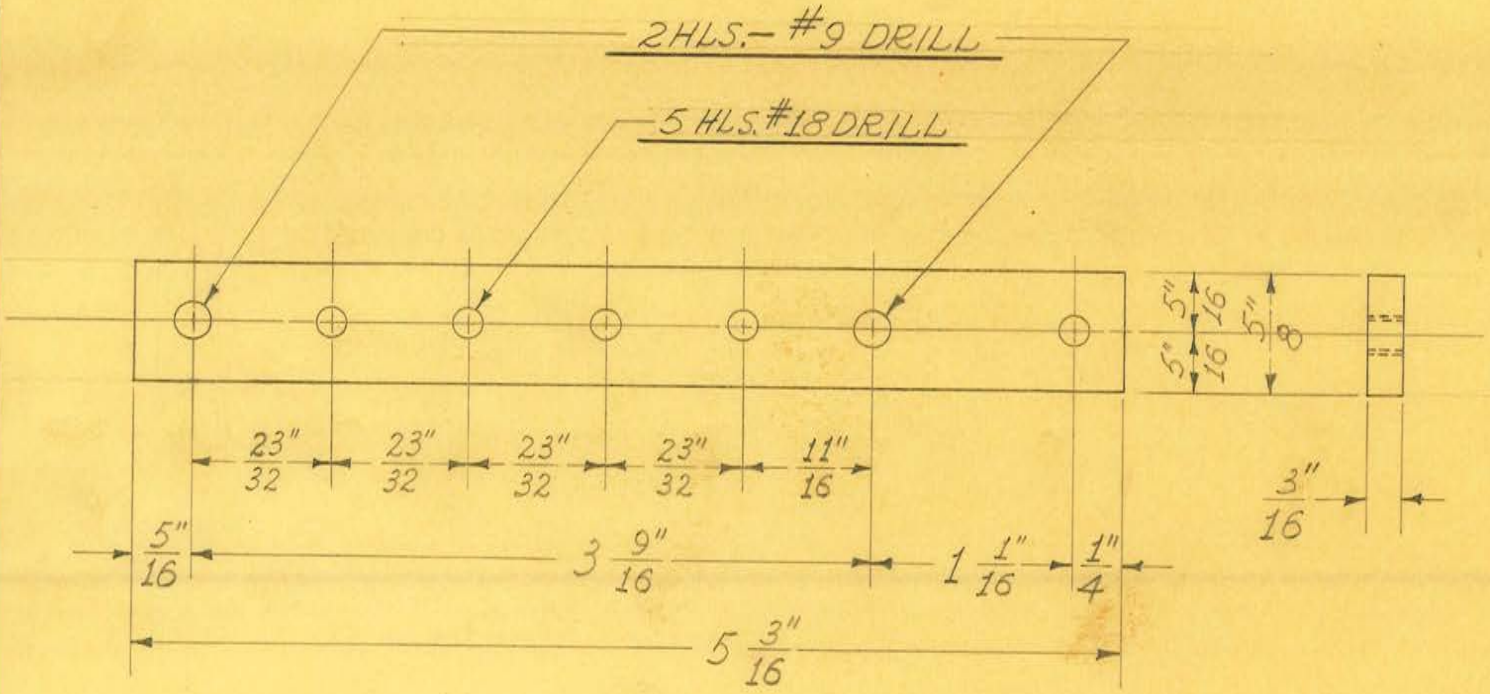


2 REQUIRED

OBSOLETE

Obsolete

| | | | |
|---|---|---|---|
| SIZE | 3/16" SHEET | ISSUE 9-15-38 | J.W. |
| KIND | BAKELITE | CHANGED | |
| SHAPE | | " | |
| FINISH | | " | |
| TEMP. | | " | |
| PATT. | | " | |

**TITLE:**
FISCHER MOD. "M" SHORT WAVE
FILAMENT TRANSFORMER TERMINAL STRIP

H. G. FISCHER & CO.
2335 WABANSIA AVE.
CHICAGO, ILL.

CAT. NO.

PART NO. 12066

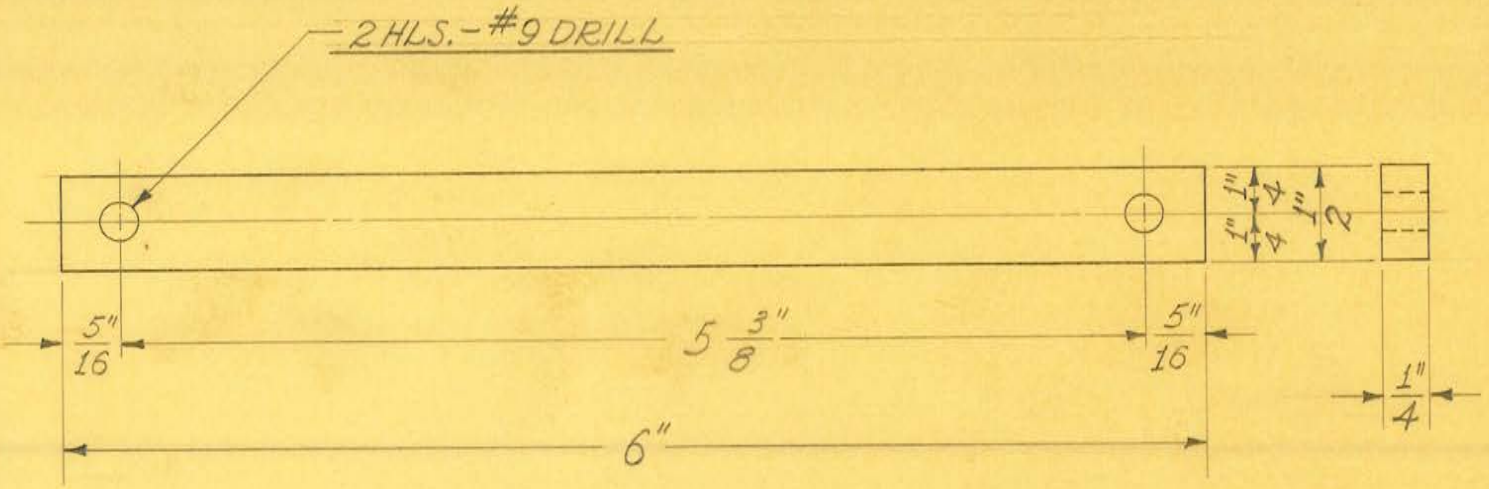


2 REQUIRED

OBSOLETE

Obsolete

| | | | |
|---|---|---|---|
| SIZE | 1/2" X 1/4" | ISSUE 9-14-38 | J.W. |
| KIND | C.R. STEEL | CHANGED | |
| SHAPE | BAR | " | |
| FINISH | BLACK #80 | " | |
| TEMP. | | " | |
| PATT. | | " | |

**TITLE:** FISCHER MOD. "M" SHORT WAVE FILAMENT TRANSFORMER SUPPORT STRIP

H. G. FISCHER & CO.
2335 WABANSIA AVE.
CHICAGO, ILL.

CAT. NO.

PART NO. 12067

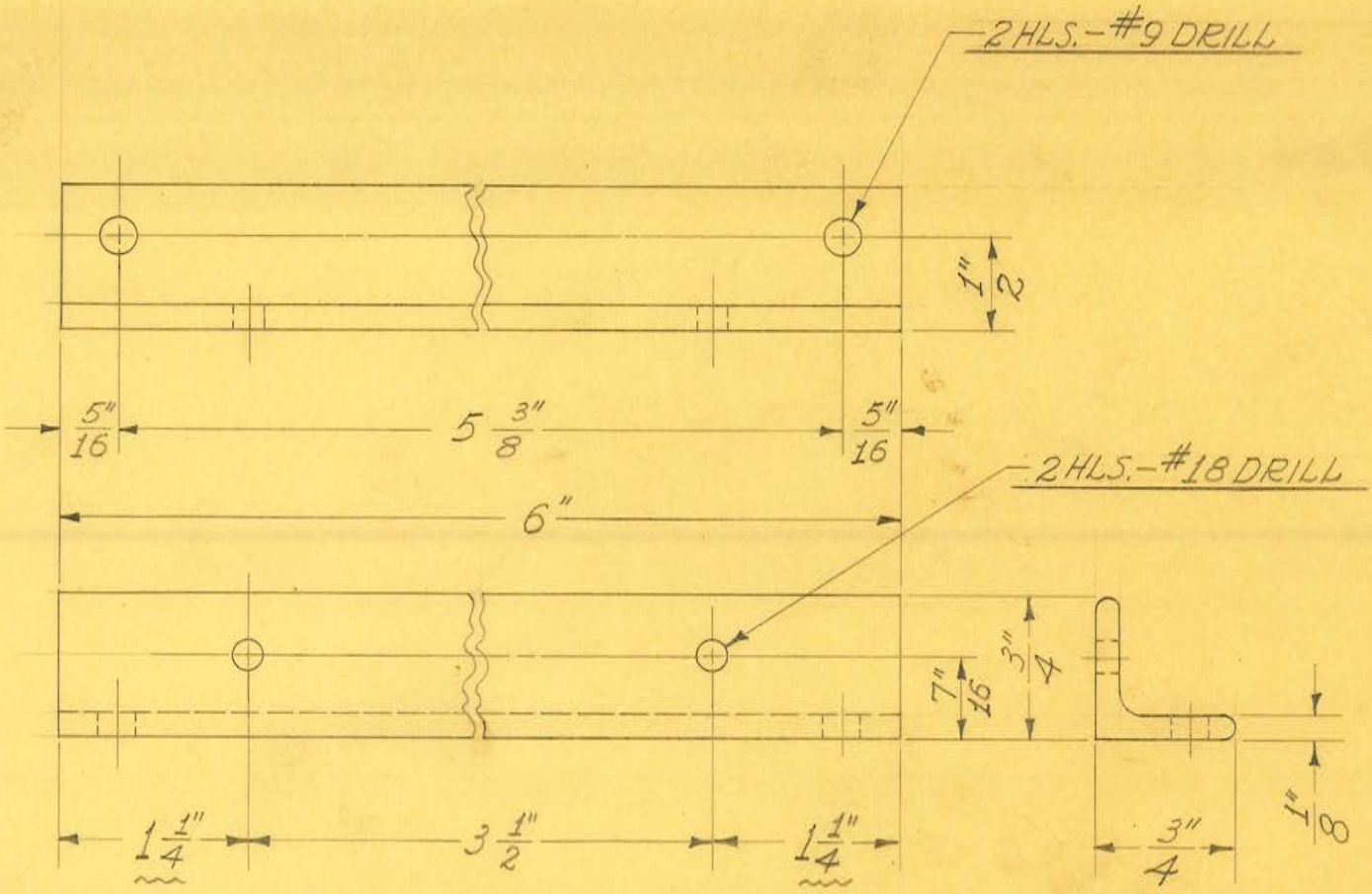


2 REQUIRED

OBSOLETE

Obsolete

| | | | |
|---|---|---|---|
| SIZE | 3/4" X 3/4" X 1/8" | ISSUE 9-14-38 | J.W. |
| KIND | ANGLE IRON | CHANGED | |
| SHAPE | | " | |
| FINISH | BLACK #80 | " | |
| TEMP. | | " | |
| PATT. | | " | |

**TITLE:**
FISCHER MOD. "M" SHORT WAVE
FILAMENT TRANSFORMER SUPPORT ANGLE

H. G. FISCHER & CO.
2335 WABANSIA AVE.
CHICAGO, ILL.

CAT. NO.

PART NO. 12068

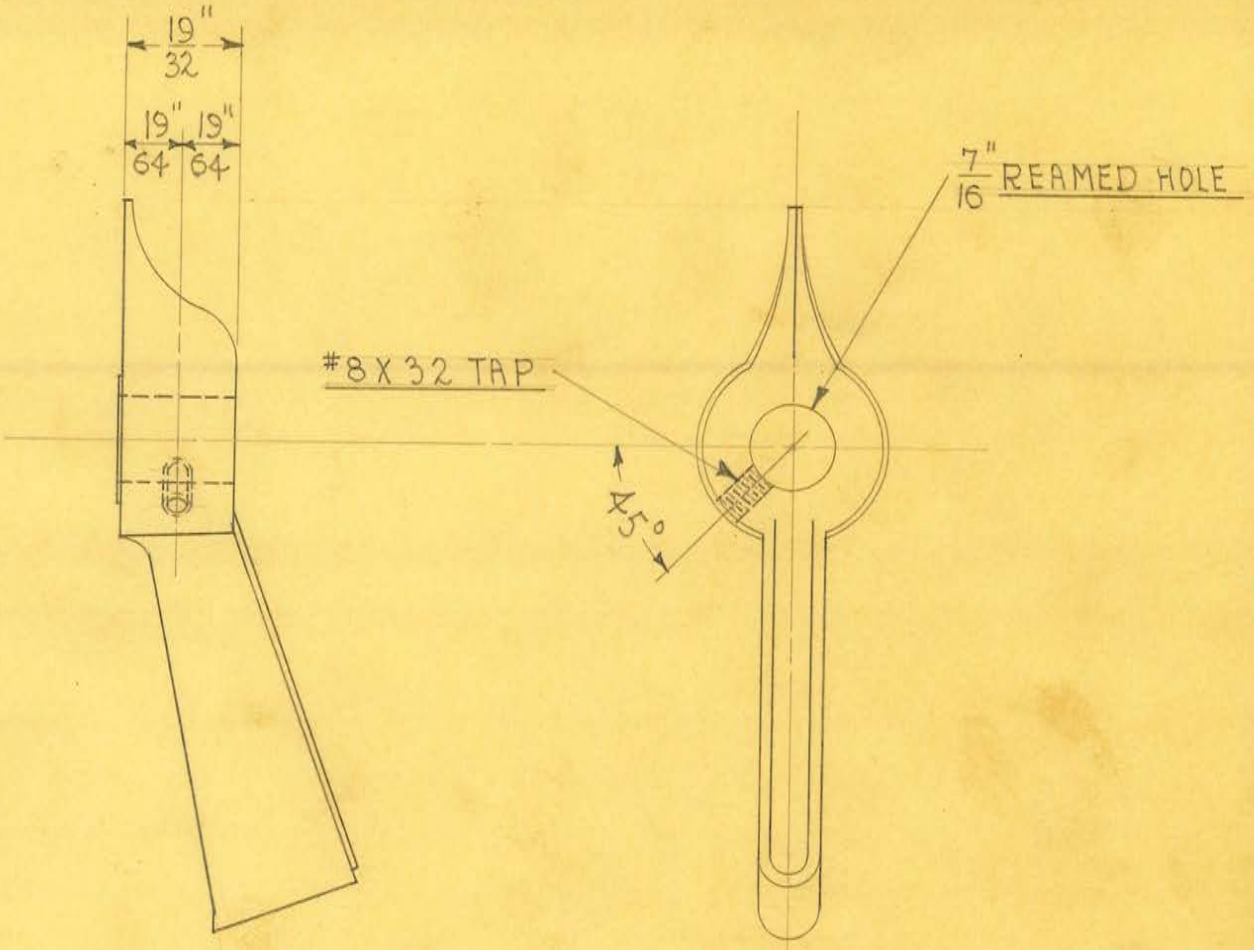


1 REQUIRED

OBSOLETE

Obsolete

| | | | |
|---|---|---|---|
| SIZE | | ISSUE 10-19-38 | HE. |
| KIND | MOLDED BAKELITE | CHANGED | |
| SHAPE | | " | |
| FINISH | | " | |
| TEMP. | | " | |
| PATT. | | " | |

**TITLE:** FISCHER MOD. "M" S. W. TUNING CONDENSER CONTROL INDICATOR - IVORY (DRILLED)

H. G. FISCHER & CO.
2335 WABANSIA AVE.
CHICAGO, ILL.

CAT. NO.

PART NO. 12070F

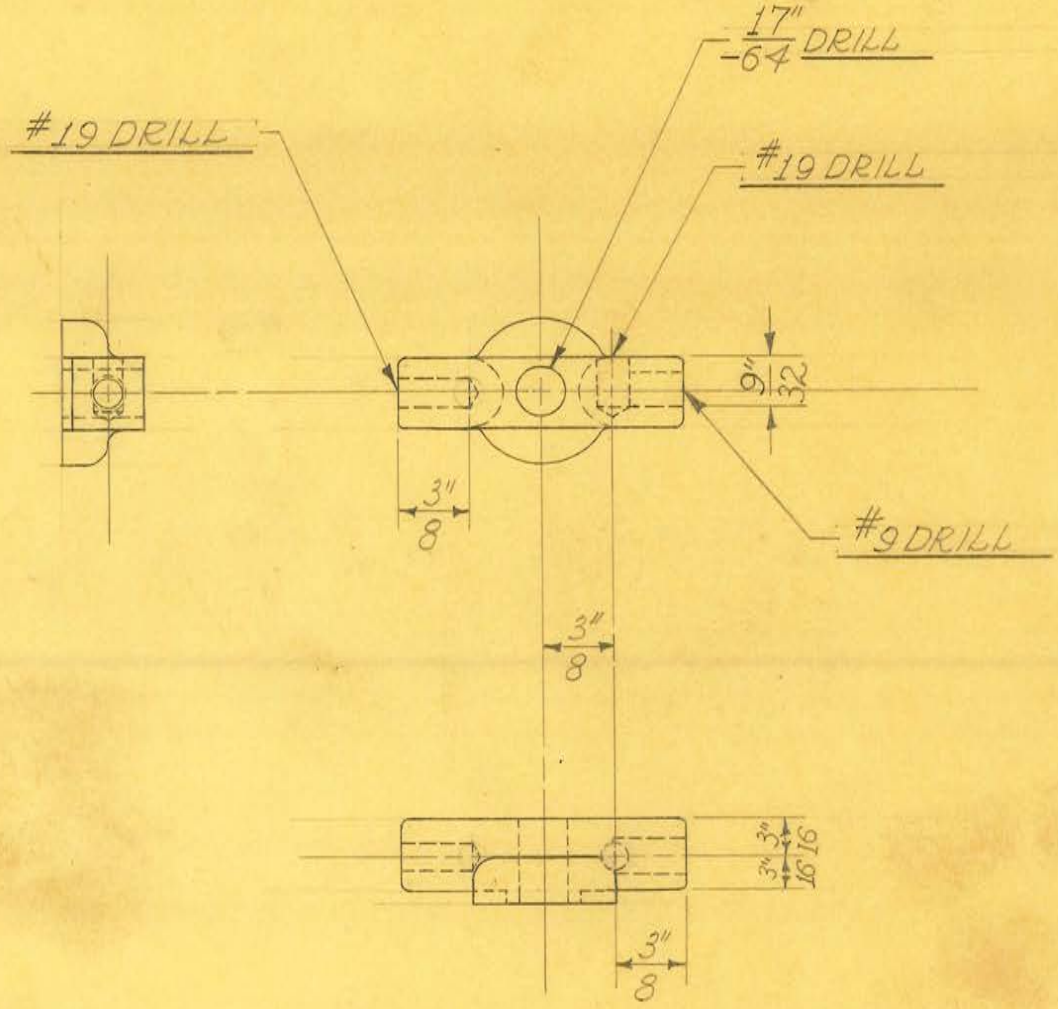


1 REQUIRED

OBSOLETE

obsolete

| | | | |
|---|---|---|---|
| SIZE | | ISSUE 9-20-38 | J.W. |
| KIND | BRASS CASTING | CHANGED | |
| SHAPE | | " | |
| FINISH | CAD. #23 | " | |
| TEMP. | | " | |
| PATT. | 6848-802 | " | |

**TITLE:** FISCHER MOD. "M" SHORT WAVE OSCILLATING COIL SUPP.-RIGHT

H. G. FISCHER & CO.
2335 WABANSIA AVE.
CHICAGO, ILL.

CAT. NO.

PART NO. 12071

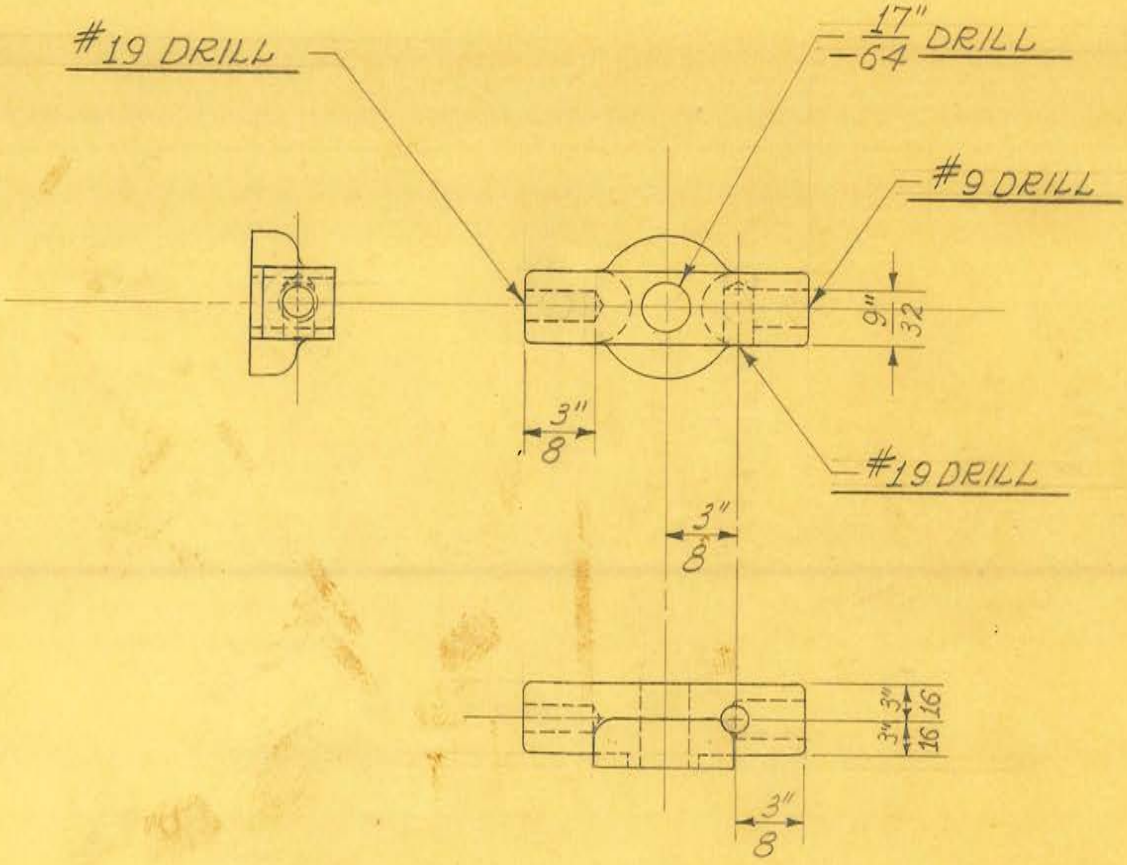


1 REQUIRED

OBSOLETE

| | | | | |
|---|---|---|---|---|
| SIZE | | ISSUE 9-19-38 | J.W. | **TITLE:** FISCHER MOD. "M" SHORT WAVE OSCILLATING COIL SUPP. - LEFT |
| KIND | BRASS CASTING | CHANGED | | |
| SHAPE | | " | | |
| FINISH | CAD. #23 | " | | |
| TEMP. | | " | | |
| PATT. | 6848-802 | " | | |

H. G. FISCHER & CO.
2335 WABANSIA AVE.
CHICAGO, ILL.

CAT. NO.

PART NO. 12072

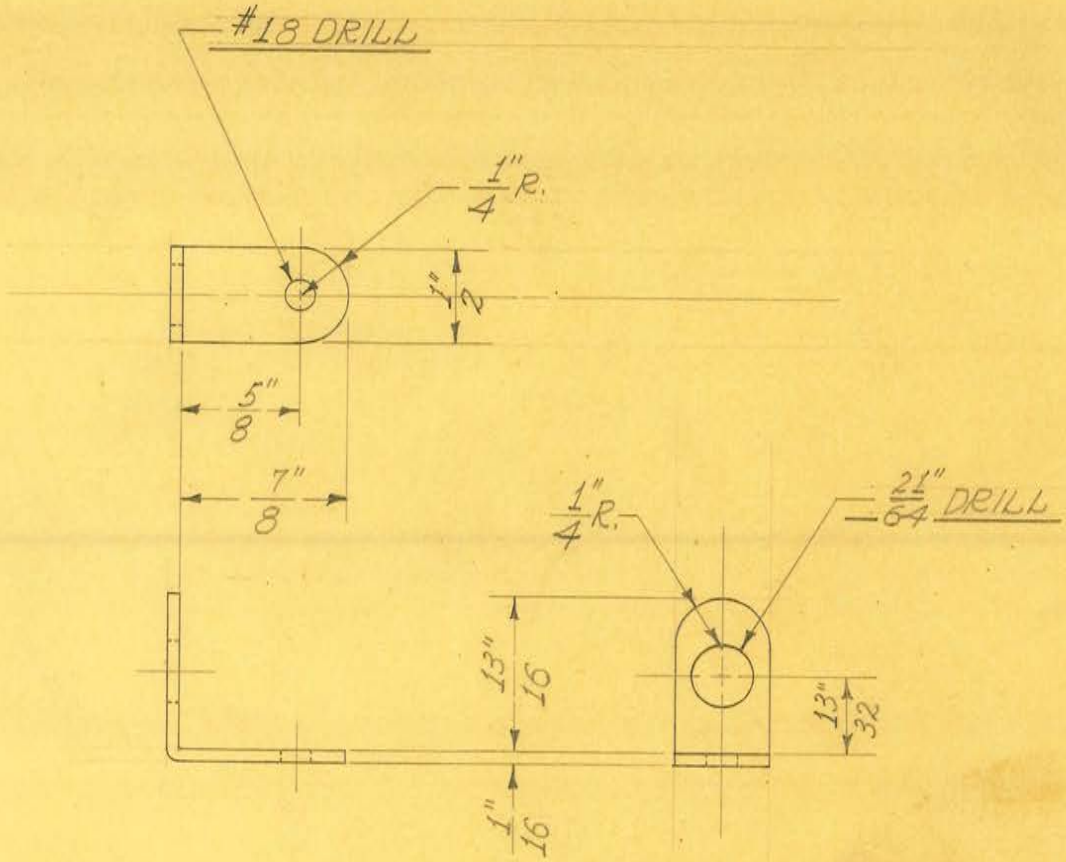


4 REQUIRED

DEVELOPED LENGTH = 1 23/32"

OBSOLETE

| | | | |
|---|---|---|---|
| SIZE | 1/2" X 1/16" | ISSUE 9-13-38 | J.W. |
| KIND | BRASS STRIP | CHANGED | |
| SHAPE | | " | |
| FINISH | DIP #7 | " | |
| TEMP. | | " | |
| PATT. | | " | |

**TITLE:** FISCHER MOD. "M" SHORT WAVE - COAG. FIXED CONDENSER MOUNTING BRACKET

H. G. FISCHER & CO.
2335 WABANSIA AVE.
CHICAGO, ILL.

CAT. NO.

PART NO. 12074

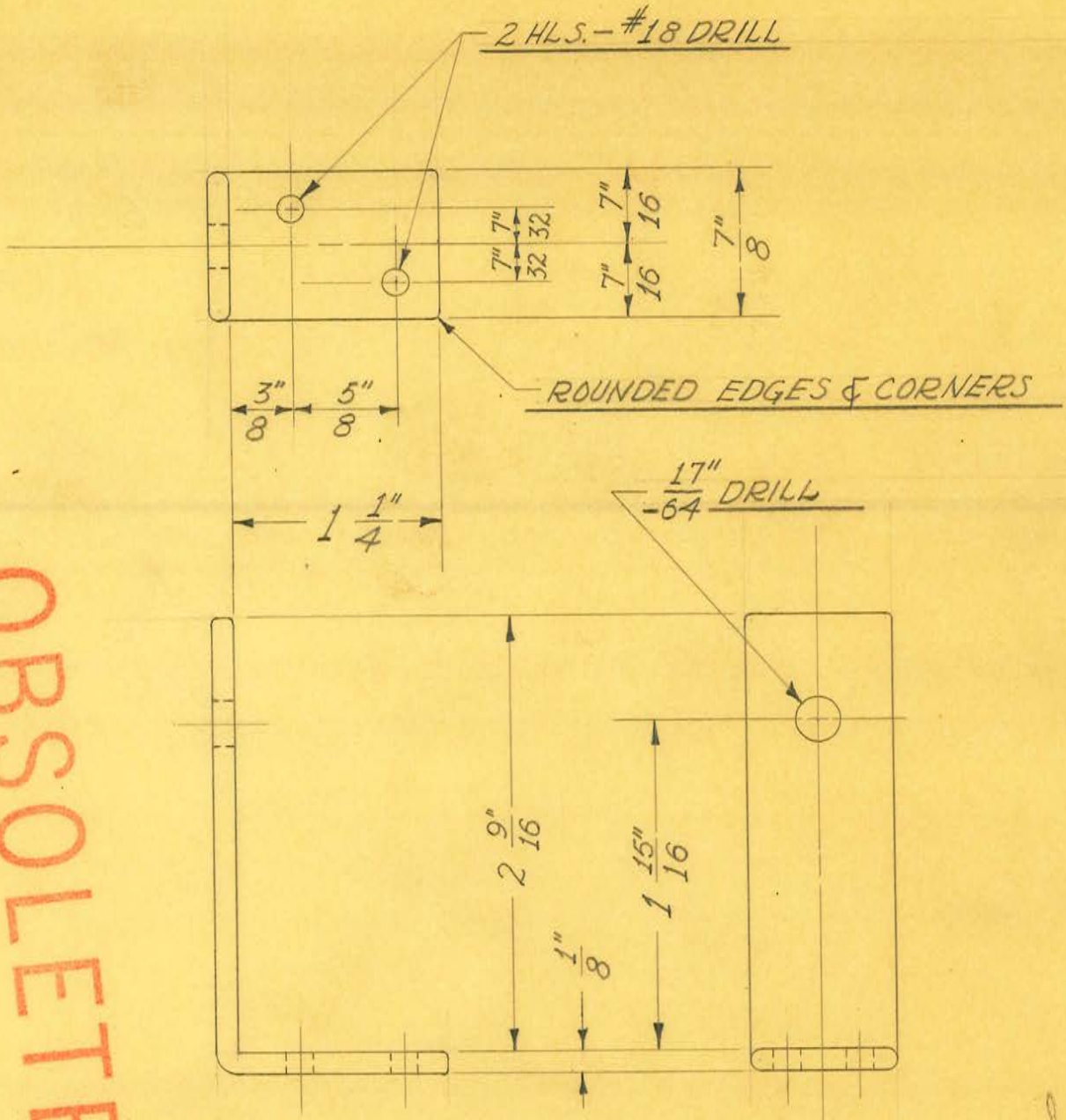


OBSOLETE

DEVELOPED LENGTH = 3 7" 8

2 REQUIRED

| | | | |
|---|---|---|---|
| SIZE | 7/8" X 1/8" | ISSUE 11-17-38 | J.W. |
| KIND | FLAT WIRE | CHANGED | |
| SHAPE | | " | |
| FINISH | BLACK #80 | " | |
| TEMP. | | " | |
| PATT. | | " | |

**TITLE:** SHORT WAVE LINE PROTECTOR SUPPORT BRACKET

H. G. FISCHER & CO.
2335 WABANSIA AVE.
CHICAGO, ILL.

CAT. NO.

PART NO. 12078

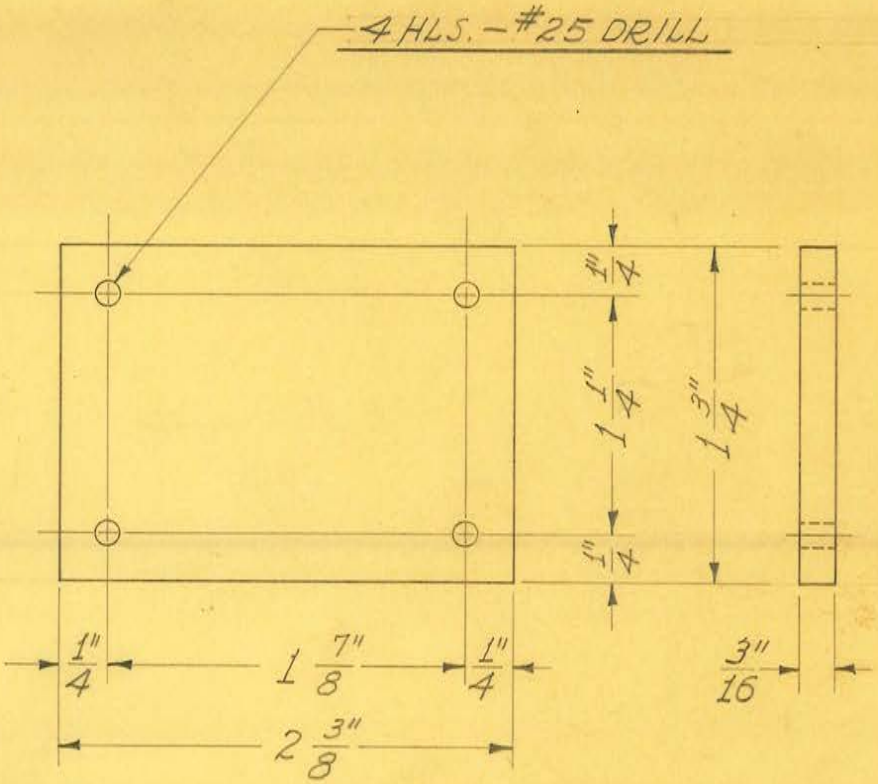


OBSOLETE

| | | | |
|---|---|---|---|
| SIZE | | ISSUE 9-13-38 | J.W. |
| KIND | ALSIMAG #35 | CHANGED | |
| SHAPE | | " | |
| FINISH | | " | |
| TEMP. | | " | |
| PATT. | | " | |

**TITLE:**
FISCHER MOD. "M" SHORT WAVE
BY-PASS CONDENSER MOUNTING BOARD

H. G. FISCHER & CO.
2335 WABANSIA AVE.
CHICAGO, ILL.

CAT. NO.

PART NO. 12079

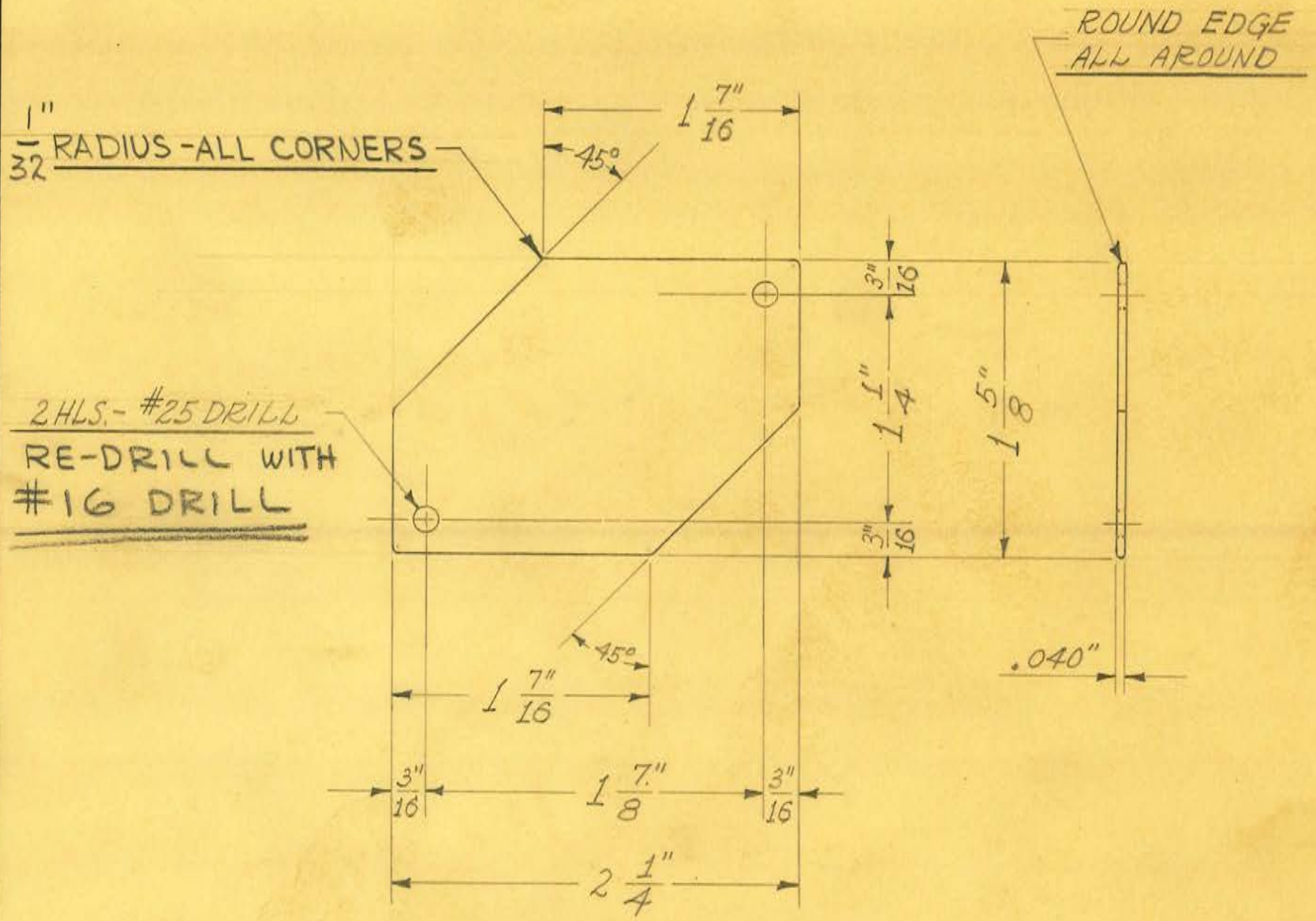


OBSOLETE

8 REQUIRED

OPERATIONS

1st BLANK & PIERCE

2nd RE-DRILL

3rd ROUND EDGES

BLANK & PIERCE DIE #6829 BIN Y-7

| | | | |
|---|---|---|---|
| SIZE | .040" HARD | ISSUE 9-13-38 | J.W. |
| KIND | SHEET ALUM. | CHANGED | |
| SHAPE | | " | |
| FINISH | | " | |
| TEMP. | | " | |
| PATT. | | " | |

**TITLE:** FISCHER MOD. "M" SHORT WAVE BY-PASS CONDENSER - STATOR PLATE

H. G. FISCHER & CO.
2335 WABANSIA AVE.
CHICAGO, ILL.

CAT. NO.

PART NO. 12080

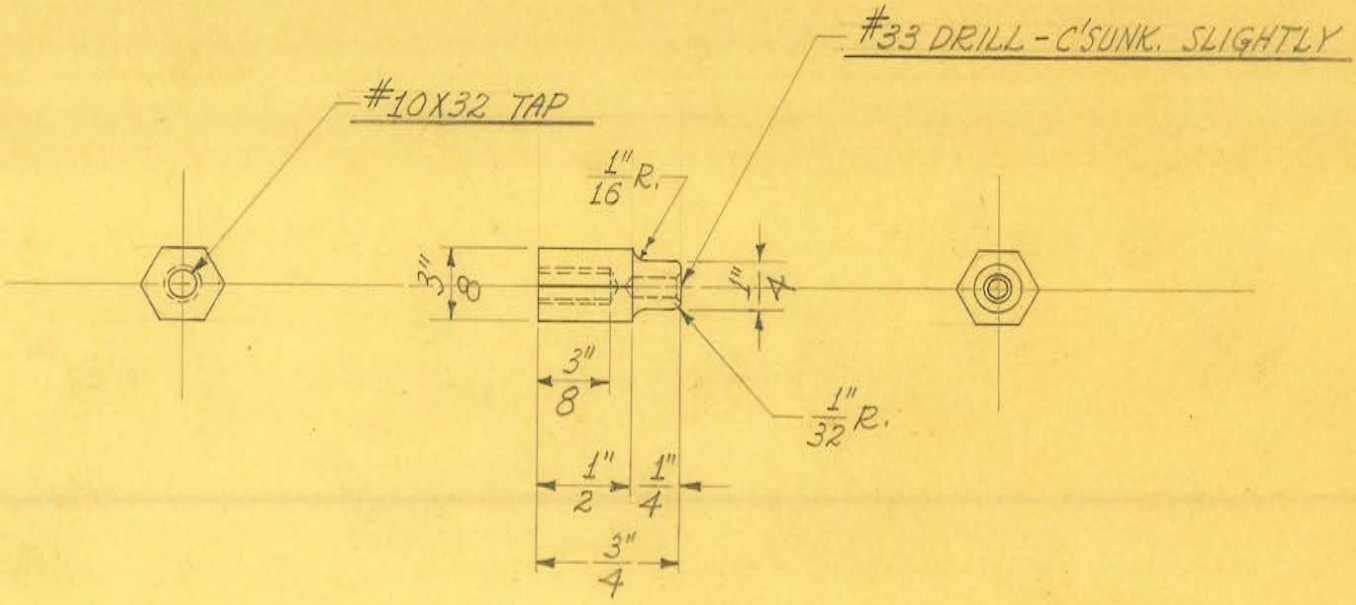


2 REQUIRED

OBSOLETE

Obsolete

| | | | | |
|---|---|---|---|---|
| SIZE | 3/8" HEX. | ISSUE 9-13-38 | J.W. | TITLE: FISCHER MOD. "M" SHORT WAVE PICKUP COIL CONNECTION – FRONT |
| KIND | BRASS ROD | CHANGED | | |
| SHAPE | | " | | |
| FINISH | CAD. #23 | " | | |
| TEMP. | | " | | |
| PATT. | | " | | |

H. G. FISCHER & CO.
2335 WABANSIA AVE.
CHICAGO, ILL.

CAT. NO.

PART NO. 12083

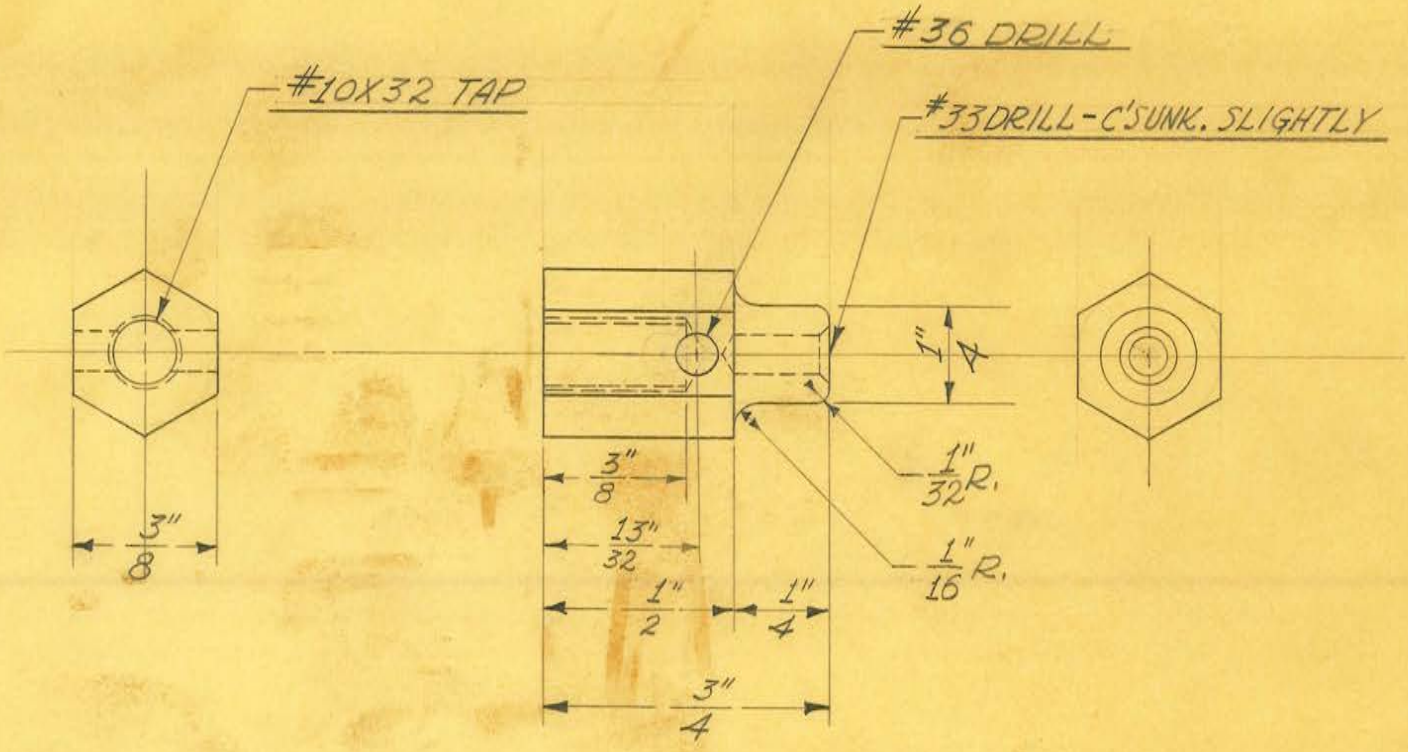


SCALE ÷ DOUBLE SIZE

2 REQUIRED

OBSOLETE

Obsolete

| | | | |
|---|---|---|---|
| SIZE | 3/8" HEX. | ISSUE 12-21-38 | J.W. |
| KIND | BRASS ROD | CHANGED 1-10-39 | J.W. |
| SHAPE | | " | |
| FINISH | CAD. #23 | " | |
| TEMP. | | " | |
| PATT. | | " | |

**TITLE:** FISCHER MOD. "M" SHORT WAVE PICKUP COIL CONNECTION - FRONT

H. G. FISCHER & CO.
2335 WABANSIA AVE.
CHICAGO, ILL.

CAT. NO.

PART NO. 12083A

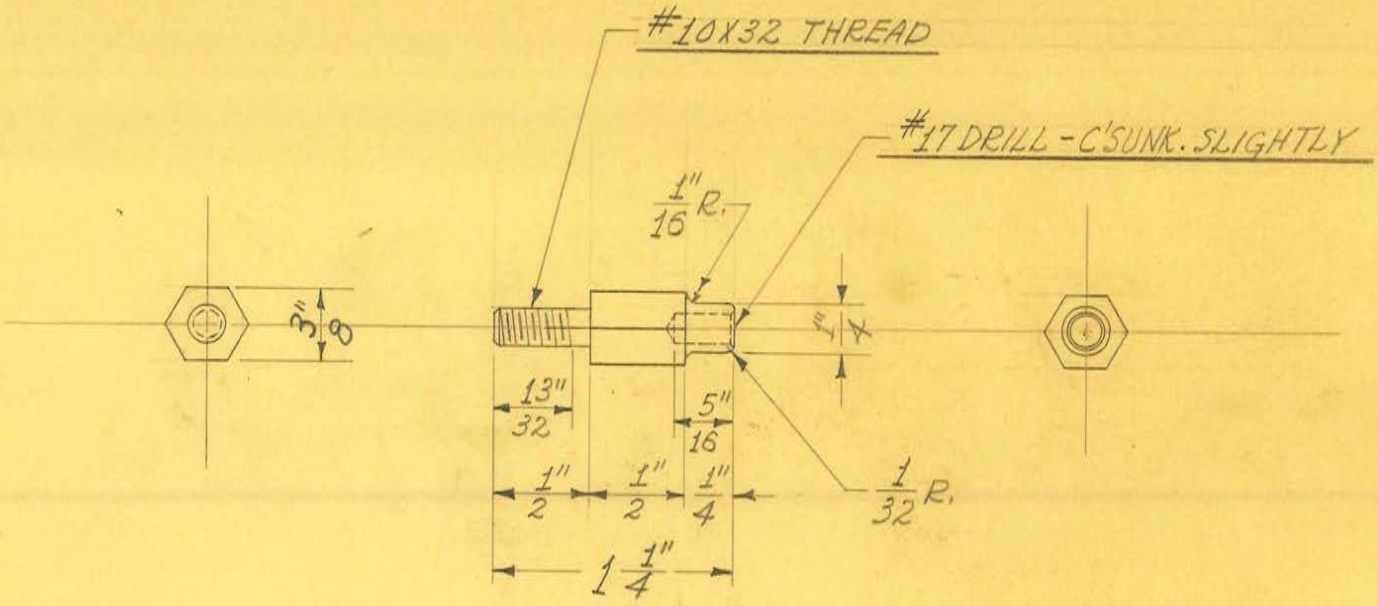


2 REQUIRED

OBSOLETE

Obsolete

| | | | |
|---|---|---|---|
| SIZE | 3/8" HEX. | ISSUE 9-13-38 | J.W. |
| KIND | BRASS ROD | CHANGED | |
| SHAPE | | " | |
| FINISH | CAD. #23 | " | |
| TEMP. | | " | |
| PATT. | | " | |

**TITLE:** FISCHER MOD. "M" SHORT WAVE - PICKUP COIL CONNECTION - REAR

H. G. FISCHER & CO.
2335 WABANSIA AVE.
CHICAGO, ILL.

CAT. NO.

PART NO. 12084

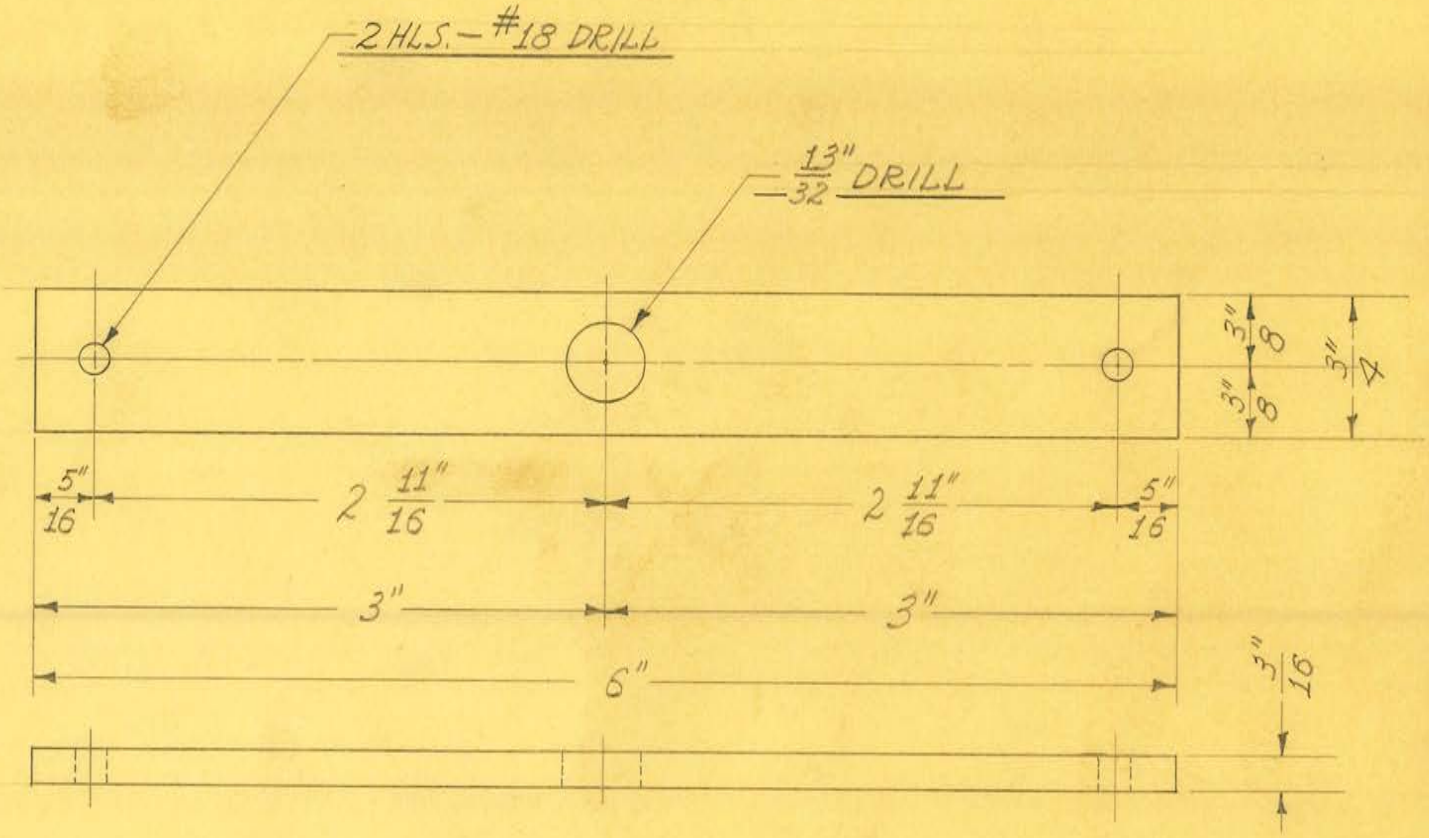


1 REQUIRED

OBSOLETE

Obsolete

| | | | |
|---|---|---|---|
| SIZE | 3/16" SHEET | ISSUE 9-13-38 | J.W. |
| KIND | BAKELITE | CHANGED | |
| SHAPE | | " | |
| FINISH | | " | |
| TEMP. | | " | |
| PATT. | | " | |

**TITLE:** FISCHER MOD. "M" SHORT WAVE – COAG. TUNING CONDENSER – MOUNTING STRIP

H. G. FISCHER & CO.
2335 WABANSIA AVE.
CHICAGO, ILL.

CAT. NO.

PART NO. 12085

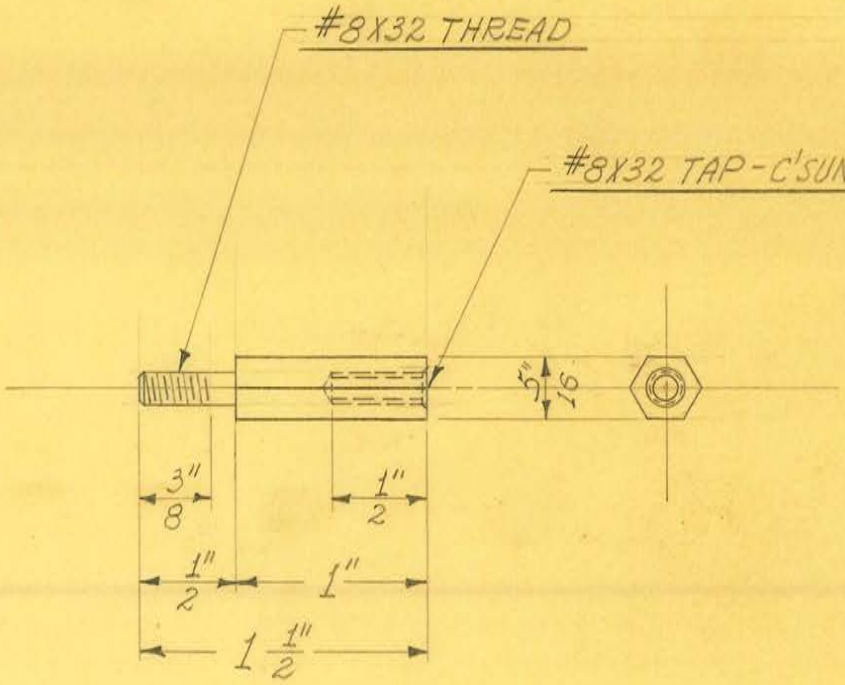


2 REQUIRED

OBSOLETE

Obsolete

| | | | |
|---|---|---|---|
| SIZE | 5/16" HEX. | ISSUE 9-13-38 | J.W. |
| KIND | BRASS ROD | CHANGED | |
| SHAPE | | " | |
| FINISH | CAD. #23 | " | |
| TEMP. | | " | |
| PATT. | | " | |

**TITLE:** FISCHER MOD. "M" SHORT WAVE COAG. TUNING COND. MTG. STRIP SPACER

H. G. FISCHER & CO.
2335 WABANSIA AVE.
CHICAGO, ILL.

CAT. NO.

PART NO. 12086

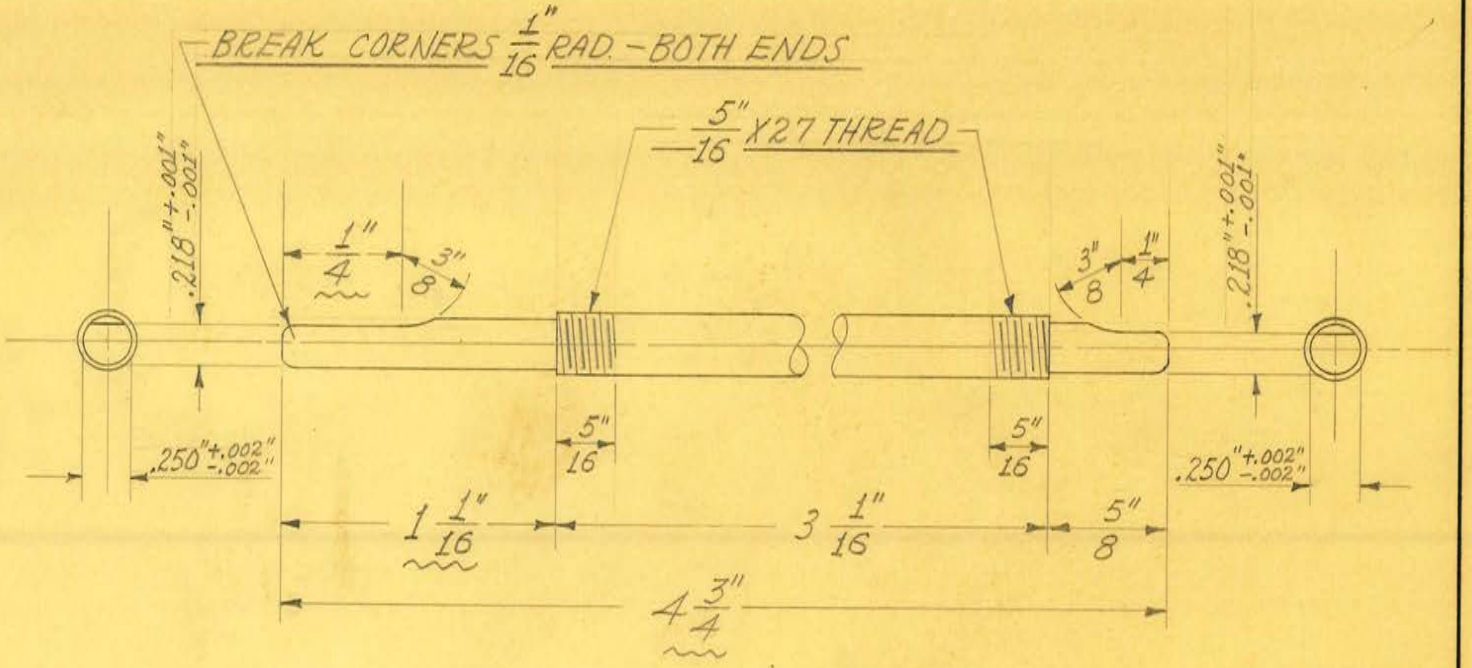


1 REQUIRED

OBSOLETE

obsolete

| | | | | |
|---|---|---|---|---|
| SIZE | 5/16" DIAM. | ISSUE 9-12-38 | J.W. | TITLE: FISCHER MOD. "M" SHORT WAVE OSCILLATING COIL TUNING CONDENSER-ROTOR SHAFT |
| KIND | SCREW STOCK | CHANGED 10-4-38 | J.W. | |
| SHAPE | | " | | |
| FINISH | CAD. #23 | " | | |
| TEMP. | | " | | |
| PATT. | | " | | |

H. G. FISCHER & CO.
2335 WABANSIA AVE.
CHICAGO, ILL.

CAT. NO.

PART NO. 12087A

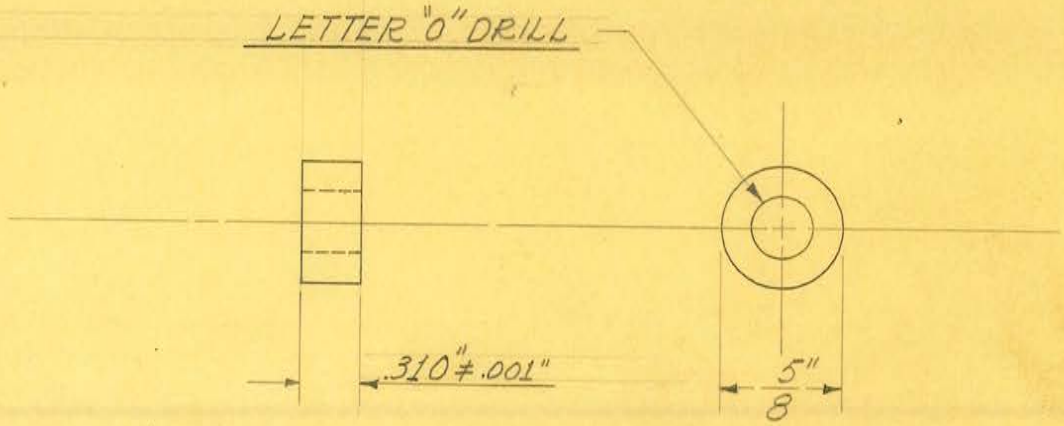


2 REQUIRED

OBSOLETE

Obsolete

| | | | | |
|---|---|---|---|---|
| SIZE | 5/8" DIAM. | ISSUE 9-12-38 | J.W. | TITLE: FISCHER MOD. "M" SHORT WAVE ROTOR PLATE – END SPACER |
| KIND | #17 S.T. ALUM. | CHANGED | | |
| SHAPE | ROD | " | | |
| FINISH | ACID DIP #41 | " | | |
| TEMP. | | " | | |
| PATT. | | " | | |

H. G. FISCHER & CO.
2338 WABANSIA AVE.
CHICAGO, ILL.

CAT. NO.

PART NO. 12089

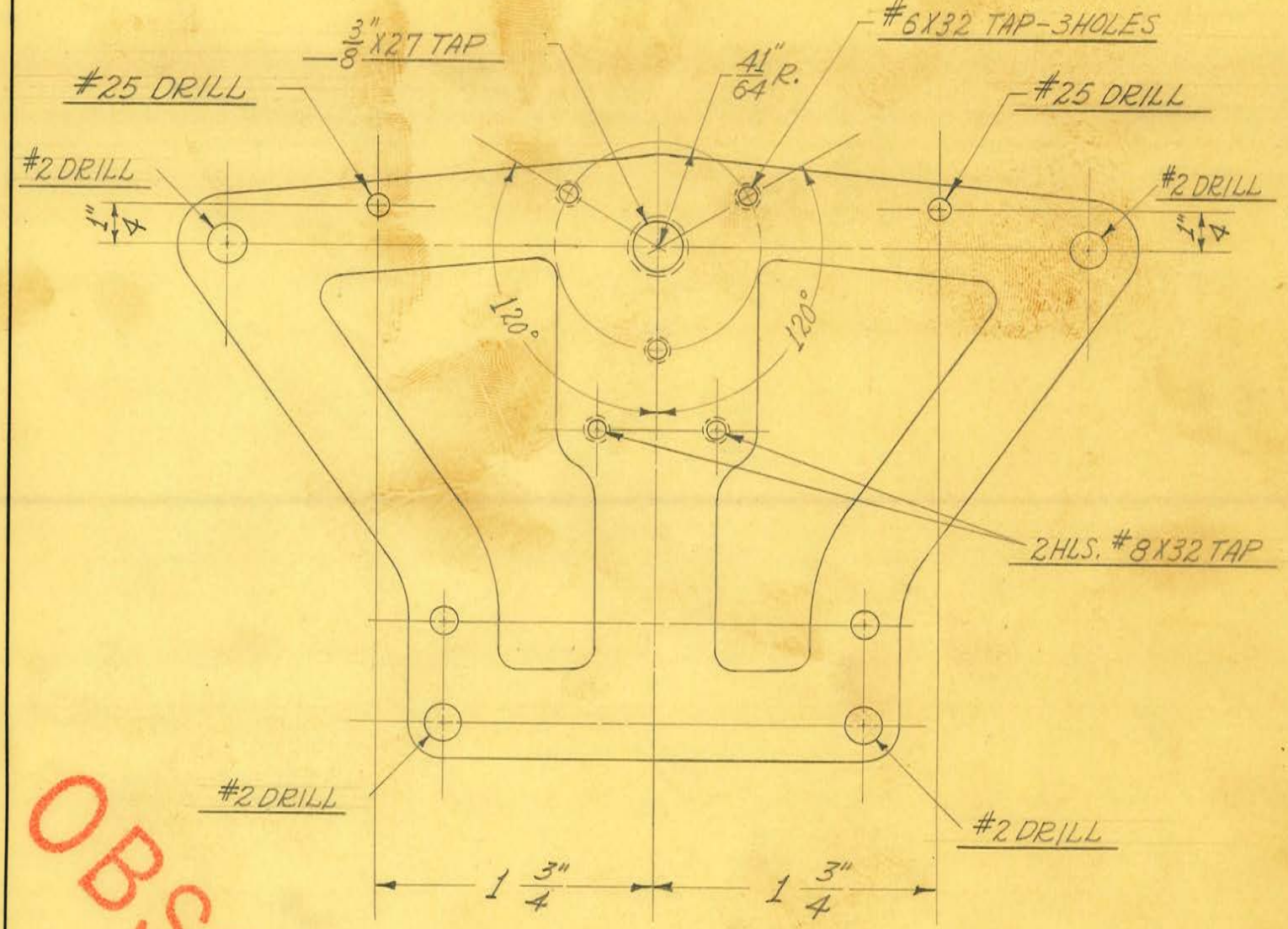


OBSOLETE

FROM # 9829

1 REQUIRED

obsolete

| | | | | |
|---|---|---|---|---|
| SIZE | | ISSUE 9-12-38 | J.W. | **TITLE:** FISCHER MOD. "M" SHORT WAVE OSCILLATING COIL TUNING CONDENSER END FRAME - FRONT |
| KIND | | CHANGED 10-4-38 | J.W. | |
| SHAPE | | " 2-6-39 | J.W. | |
| FINISH | SAL. SODA DIP #40 | " | | |
| TEMP. | | " | | |
| PATT. | | " | | |

H. G. FISCHER & CO.
2335 WABANSIA AVE.
CHICAGO, ILL.

CAT. NO.

PART NO. 12091B